WENDY'S 1.0 - SMART 55 SQUARE

HIGHWAY 95 PONDERAY, ID

SITE NUMBER:	12281
BASE MDL:	SMART 55 - SQUARE 2017
ASSET TYPE:	FRANCHISEE
CLASSIFICATION:	NEW
OWNER:	WENSPOK
BASE VERSION:	2017
UPGRADE CLASSIFICATION:	NEW BUILD
PROJECT YEAR:	2020
FURNITURE PACKAGE:	2016 V3
DRAWING RELEASE	JANUARY 2020

GENERAL NOTES

1. REVIEW DOCUMENTS AND VERIFY DIMENSIONS AND FIELD CONDITIONS AND CONFIRM THAT WORK IS CONSTRUCTIBLE AS SHOWN. CONFLICTS OR OMISSIONS, ETC., SHALL BE IMMEDIATELY REPORTED TO THE ARCHITECT FOR CLARIFICATION PRIOR TO THE PERFORMANCE OF WORK IN QUESTION.
2. DO NOT SCALE DRAWINGS. WRITTEN DIMENSIONS GOVERN PARTITION LOCATIONS. IN CASE OF CONFLICT, NOTIFY THE ARCHITECT OF RECORD. FLOOR PLAN BY ARCHITECT OF RECORD SUPERSEDES OTHER PLANS. DIMENSIONS MARKED "CLEAR" SHALL BE MAINTAINED AND SHALL ALLOW FOR THICKNESS OF FINISHES INCLUDING CARPET, PAD, CERAMIC TILE, V.C.T., ETC
3. INTERIOR DIMENSIONS ARE TO THE FACE OF STUD, UNLESS NOTED OTHERWISE.
4. MARK LOCATIONS OF PARTITIONS AND DOORS FOR REVIEW BY THE OWNER'S REPRESENTATIVE PRIOR TO INSTALLATION. REVIEW WILL BE FOR DESIGN INTENT. COORDINATE AND VERIFY CONDITIONS TO ENSURE PROPER FIT.
5. CONTRACTOR IS REQUIRED TO SCHEDULE A PRE-CONSTRUCTION MEETING WITH THE OWNER'S REPRESENTATIVE TO REVIEW SPECIFIC REQUIREMENTS. CONTRACTOR IS RESPONSIBLE TO FOLLOW LOCAL RULES AND REGULATIONS.
6. WHEN CONTRACTOR ACCEPTS DELIVERY OF ALL ITEMS NOTED ON PLANS WHETHER IN CONTRACT OR NOT IN CONTRACT, HE SHALL BE RESPONSIBLE FOR LOSS AND/OR DAMAGE TO THESE ITEMS.
7. THE CONTRACTOR SHALL MAINTAIN, FOR THE ENTIRE DURATION OF THE WORK, ALL EXITS, EXIT/ EGRESS LIGHTING, FIRE PROTECTION DEVICES AND ALARMS IN CONFORMANCE WITH ALL APPLICABLE CODES AND ORDINANCES.
8. SAW CUTTING AND CORING LOCATIONS SHALL BE REVIEWED IN FIELD AND COORDINATED WITH THE OWNER'S REPRESENTATIVE PRIOR TO CUTTING/CORING.
9. DURING ALL PHASES OF WORK, DO NOT DISTURB THE DELIVERIES AND FUNCTIONS OF ADJACENT AND NEIGHBORING TENANTS.
10. 'TYP.' MEANS THAT THE CONDITION IS REPRESENTATIVE FOR SIMILAR CONDITIONS THROUGHOUT, UNLESS OTHERWISE NOTED.
11. PROVIDE PORTABLE FIRE EXTINGUISHER(S) IN ACCORDANCE WITH NFPA 10, WITH U.L. LABEL AND A RATING OF NOT LESS THAN 2-A WITH 75 FT. TRAVEL DISTANCE TO ALL POSITIONS OF RESTAURANT OR AS DIRECTED BY THE FIRE DEPARTMENT FIELD INSPECTOR. PROVIDE CLASS K FIRE EXTINGUISHER WITHIN 20 FT. OF COMMERCIAL FOOD HEAT-PROCESSING EQUIPMENT.
12. EXTERIOR BUILDING SIGNS SHALL BE SUBMITTED UNDER SEPARATE PERMIT APPLICATION FOR REVIEW AND APPROVAL AS REQUIRED BY LOCAL AUTHORITIES. EXTERIOR SIGNS ARE NOT WITHIN THE SCOPE OF BUILDING DEPARTMENT APPROVAL.
13. PRIOR TO COMMENCEMENT OF WORK - OBTAIN A COPY OF THE BUILDING CONSTRUCTION PERMIT FROM THE AUTHORITY HAVING JURISDICTION (AHJ) AND A COPY OF THE SET OF CONSTRUCTION DOCUMENTS SIGNED AND SEALED BY A LICENSED DESIGN PROFESSIONAL FOR ALL DISCIPLINES AS REQUIRED AND USED TO OBTAIN THE BUILDING PERMIT.
14. IF REQUIRED BY LOCAL JURISDICTION - SPRINKLER, LIFE SAFETY, AND FIRE ALARM SYSTEMS ARE TO BE DESIGNED AND SUBMITTED FOR REVIEW AND APPROVAL BY LOCALLY LICENSED DESIGN PROFESSIONAL. THE DESIGN OF SYSTEM(S) MUST COMPLY TO LOCAL, STATE, AND NATIONAL CODES.
15. BIDDERS REFER TO WENDY'S APPROVED SUPPLIER LIST TO OBTAIN NATIONAL ACCOUNT PHONE NUMBERS AND CONTACTS.
16. GC IS RESPONSIBLE FOR FINDING AND LOCATING ALL UNDERGROUND UTILITIES IN AREAS OF EXCAVATION PRIOR TO DIGGING. ACCIDENTAL INTERRUPTION OF THESE SERVICES DURING CONSTRUCTION WILL BE THE RESPONSIBILITY OF THE GC. PRIOR TO DIGGING, GC TO CALL LOCAL UTILITY LOCATION SERVICE.

DESCRIPTIVE SUMMARY OF WORK

THE WORK INCLUDES ALL LABOR, MATERIALS, AND EQUIPMENT TO BUILD, FINISH, AND PROVIDE ALL SITE WORK AND UTILITIES, FOR A PROPOSED NEW RESTAURANT FOR THE "OWNER". THE WORK SHALL INCLUDE ALL ITEMS REQUIRED AS SHOWN ON THE DRAWINGS. IN ADDITION, ALL WORK ASSOCIATED WITH THE SITE DEVELOPMENT PAVING, PARKING, WALKWAYS, PATIO SLAB, AND SITE UTILITIES TO THE BUILDING ARE TO BE PROVIDED IN THIS CONTRACT. ALL MECHANICAL EQUIPMENT AND SYSTEMS, AS WELL AS ALL ELECTRICAL EQUIPMENT AND SYSTEMS ARE TO BE INCLUDED FOR A COMPLETE OPERATING SYSTEM WITH COORDINATION AND INSTALLATION INCLUDED.

CONSTRUCTION PRODUCT WARRANTY

CONSTRUCTION / PRODUCT WARRANTIES
THESE CONSTRUCTION DOCUMENTS NOTE SPECIFIC PRODUCTS, DETAILS AND SPECIFICATIONS THAT WILL PROVIDE CONSTRUCTION / PRODUCT WARRANTIES FOR THE FOLLOWING AREAS OF CONSTRUCTION:

ROOFING (DURO-LAST)
INTERIOR TILE (LATICRETE)
EXTERIOR INSULATION & FINISH SYSTEM (STO)

ALTERING THESE DOCUMENTS MAY ALTER THE WARRANTY GUIDELINES. DURO-LAST AND LATICRETE WILL BE REQUIRED TO APPROVE THE DRAWINGS TO MAINTAIN THE WARRANTIES. THE CONTRACTOR IS ALSO RESPONSIBLE FOR CONTACTING, DURO-LAST AND LATICRETE FOR ON-SITE INSTALLATION INSPECTIONS OF EACH OF THE AREAS OF WORK.

ABBREVIATIONS

℄	CENTERLINE	KED	KITCHEN EQUIPMENT DISTRIBUTOR
ACM	ALUMINUM COMPOSITE MATERIAL	LAM	LAMINATE
ACT	ACOUSTIC CEILING TILE	LB(S).	POUND(S)
ADJ.	ADJUSTABLE	MAX.	MAXIMUM
A.F.F.	ABOVE FINISH FLOOR	MECH.	MECHANICAL
ALUM.	ALUMINUM	MFR.	MANUFACTURER
A.O.R.	ARCHITECT OF RECORD	MGR.	MANAGER
ARCH.	ARCHITECTURAL	MIN.	MINIMUM
BD.	BOARD	MISC	MISCELLANEOUS
BLDG.	BUILDING	MTL.	METAL
BLKG.	BLOCKING	N.	NORTH
BM.	BEAM	N.I.C.	NOT IN CONTRACT
BOT.	BOTTOM	N.T.S.	NOT TO SCALE
CAB.	CABINET	(N)	NEW
CER.	CERAMIC	NO.	NUMBER
CLG.	CEILING	NOM.	NOMINAL
CLKG.	CAULKING	O.D.	OUTSIDE DIAMETER
CLR.	CLEAR	OPNG.	OPENING
COL.	COLUMN	OPP.	OPPOSITE
CONC.	CONCRETE	P.LAM.	PLASTIC LAMINATE
CONT.	CONTINUOUS	PL.	PLATE
C.M.U.	CONCRETE MASONRY UNIT	PLAS.	PLASTER
DBL.	DOUBLE	PLWD.	PLYWOOD
DET.	DETAIL	PR.	PAIR
DIA.	DIAMETER	PROV'D	PROVIDED
DIM.	DIMENSION	PT.	POINT
DND	DO NOT DISTURB	P.T.	PRESSURE-TREATED
DR.	DOOR	P.U.W.	PICK UP WINDOW
DS.	DOWNSPOUT	RAD.	RADIUS
DWG.	DRAWING	REF.	REFERENCE
(E)	EXISTING	REG.	REGISTER
EA.	EACH	REQ'D.	REQUIRED
ELEV.	ELEVATION	RM.	ROOM
ELEC.	ELECTRICAL	S.	SOUTH
EMER.	EMERGENCY	S.C.	SOLID CORE
EQ.	EQUAL	S.F.	SQUARE FOOT
FDN.	FOUNDATION	S.S.	STAINLESS STEEL
F/MAS	FACE OF MASONRY	SCHED.	SCHEDULE
F.E.	FIRE EXTINGUISHER	SHT.	SHEET
F.O.	FACE OF	SIM.	SIMILAR
F.O.F.	FACE OF FINISH	SPEC.	SPECIFICATION
F.O.S.	FACE OF STUDS	SQ.	SQUARE
F/F	FINISH TO FINISH	STD.	STANDARD
F.R.	FIRE RETARDANT	STL.	STEEL
FIN.	FINISH	STOR.	STORAGE
FL.	FLOOR	SUSP.	SUSPENDED
FLUOR.	FLUORESCENT	T.C.	TIME CLOCK
FT.	FOOT, FEET	T.O.	TOP OF
F.V.	FIELD VERIFY	TEL.	TELEPHONE
G.B.	GRAB BAR	THK.	THICK
G.C.	GENERAL CONTRACTOR	TYP.	TYPICAL
GA.	GAUGE	U.N.O.	UNLESS NOTED OTHERWISE
GL.	GLASS		
GYP.	GYPSUM	V.C.T.	VINYL COMPOSITE TILE
H.	HIGH	VERT.	VERTICAL
H.M.	HOLLOW METAL	V.I.F.	VERIFY IN FIELD
HDWD.	HARDWOOD	W.	WEST
HORIZ.	HORIZONTAL	W/	WITH
HGT.	HEIGHT	W/C	WATER CLOSET
HVAC	HEATING, VENTILATION, AIR CONDITIONING	W/O	WITHOUT
		W/R	WATER RESISTANT
I.D.	INSIDE DIAMETER	WD.	WOOD
INSUL.	INSULATION	WIB	WALK-IN BOX (FREEZER/COOLER)
JT.	JOINT		

LEGEND

- COLUMN LINE
- WINDOW MARK
- DOOR MARK
- CEILING FINISH CODE / CEILING HEIGHT
- CODED NOTE
- BUILDING SECTION REFERENCE SHEET NUMBER
- SECTION REFERENCE SHEET NUMBER
- DETAIL REFERENCE SHEET NUMBER
- ELEVATION REFERENCE SHEET NUMBER
- ELEVATION NUMBER & DIRECTION SHEET NUMBER
- ELEVATION HEIGHT TARGET LOCATION IN SPACE
- ROOM NAME / ROOM NUMBER
- DETAIL REFERENCE SHEET NUMBER
- FINISH TAG
- EQUIPMENT TAG
- REVISION SYMBOL
- REVISION CLOUD
- NORTH ARROW
- PARTITION TYPE REFERENCE SHEET A4.3

CODE DATA AND SQUARE FOOTAGE

RESTAURANT	1.0 - SMART 55 SQUARE	
APPLICABLE CODES:	INTERNATIONAL BUILDING CODE	2015
	IDAHO STATE PLUMBING CODE	2015
	NATIONAL ELECTRICAL CODE; NFPA 70	2017
	INTERNATIONAL MECHANICAL CODE	2015
	INTERNATIONAL FIRE CODE	2015
	INTERNATIONAL FUEL GAS CODE	2015
	INTERNATIONAL ENERGY CONSERVATION CODE ASHRAE 90.1	2015 2013
	ACCESSIBILITY: ICC A117.1, ADA STANDARDS	2009
OCCUPANCY GROUP	A-2 RESTAURANT	
ZONING	-	
WIND SPEED	REFER TO STRUCTURAL DRAWINGS	

GROSS BUILDING AREA: 2,219 G.S.F.
WIB: 423 GROSS S.F. / 379 AGGREGATE S.F.
TOTAL FOOTPRINT AREA: 2,643 G.S.F.

OCCUPANCY CALCULATIONS:

	SQUARE FOOTAGE	OCCUPANT LOAD FACTOR	NUMBER OF OCCUPANTS
DINING	828 S.F.	1/15	55
KITCHEN	1,026 S.F.	1/200	6
STANDING SPACE	40 S.F.	1/5	8
NON-OCC.*	749 S.F.		
TOTAL NUMBER OF OCCUPANTS:			69

TOTAL EXITS REQUIRED 2

TOTAL EXITS PROVIDED 3

* NON-OCCPIED AREA INCLUDES FREEZER / COOLER, RESTROOM. CANOPIES / OVERHANGS, WALLS, HALLWAYS, AND VESTIBULE.

CONSTRUCTION TYPE:	COMBUSTIBLE VB
FIRE RESISTIVE REQUIREMENTS:	EXTERIOR BEARING WALL.....0 HR
	ROOF CONSTRUCTION.....0 HR
	CEILING.....0 HR
SPRINKLERS:	NOT REQUIRED
RESTROOM REQUIREMENTS:	WATER CLOSETS:.....2 (1 MEN / 1 WOMEN PROV'D)
	LAVATORIES.....2 (1 MEN / 1 WOMEN PROV'D)
	URINALS.....0
	DRINKING FOUNTAINS.....0
	PUBLIC ACCESS.....YES
	UNISEX IS PERMITTED.....N/A

EGRESS WIDTH CALCULATIONS:

69 OCCUPANTS x 0.2" = 13.8" EGRESS WIDTH REQ'D
(32" MIN. CLEAR ACCESSIBLE WIDTH)
108" EGRESS WIDTH PROV'D

THE LOSS OF ONE REQUIRED MEANS OF EGRESS SHALL NOT REDUCE THE EGRESS CAPACITY TO LESS THAN 50% OF REQUIRED.

TEMPLATE ISSUE LOG

ISSUE NUMBER	ISSUE NAME	ISSUE NUMBER	ISSUE NAME
ORIGINAL	2016 JAN	2016 INTERIM	2016 APR
MID YEAR RELEASE	2016 SEP		
REV 04	2017 MAR		
REV 05	2017 MAY		
REV 06	2017 OCT		
FALL RELEASE	2018 JAN		
SPRING RELEASE	2018 APRIL		
2018 FALL RELEASE	2018 OCT		

SHEET INDEX

SHEET #	SHEET NAME	REVISION 1	2	3	4
G1.1	COVER SHEET				
G1.2	LIFE SAFETY PLAN				
G2.1	SUPPLIER'S LIST & RESPONSIBILITY SCHEDULE				
G2.2	SCOPING SHEET				
AS1.0	SITE PLAN				
AS2.1	SITE DETAILS				
AS3.1	DRIVE-THRU DETAILS				
AS3.2	TRASH ENCLOSURE DETAILS				
C0	COVER SHEET				
C1	EROSION AND SEDIMENT CONTROL PLAN				
C2	SITE PLAN				
C3	GRADING PLAN				
C4	DRAINAGE PLAN				
C5	UTILITY PLAN				
C6	DETAIL SHEET				
C7	SWALE DETAIL SHEET				
C8	STANDARDS				
A1.1	FLOOR PLAN				
A1.2	REFLECTED CEILING PLAN				
A1.3	ROOF PLAN				
A2.1	EXTERIOR ELEVATIONS				
A3.1	BUILDING SECTIONS				
A3.2	WALL SECTIONS				
A3.3	WALL SECTIONS				
A3.4	WALL SECTIONS				
A4.1	SECTION DETAILS				
A4.2	PLAN DETAILS				
A4.3	PARTITION TYPES				
A4.4	ROOF DETAILS				
A5.1	FINISH PLAN				
A5.2	INTERIOR FINISH DETAILS				
A6.1	FINISH SCHEDULE				
A6.2	PAINT AND TILE SCHEDULE				
A6.3	DOOR AND WINDOW SCHEDULE				
A7.1	INTERIOR ELEVATIONS DINING ROOM				
A7.2	INTERIOR ELEVATIONS KITCHEN				
A7.3	INTERIOR ELEVATIONS RESTROOM				
EQ1.1	EQUIPMENT PLAN				
EQ1.2	EQUIPMENT SCHEDULE				
S0.1	STRUCTURAL NOTES AND SECTIONS				
S0.2	STATEMENT OF SPECIAL INSPECTION				
S1.1	FOUNDATION PLAN AND SECTIONS				
S1.2	FOUNDATION SECTIONS				
S2.1	ROOF FRAMING PLAN				
S2.2	FRAMING SECTIONS				
S2.3	FRAMING SECTIONS				
P1.0	PLUMBING SCHEDULES AND NOTES				
P1.1	PLUMBING PLAN-SANITARY WASTE AND VENT				
P1.2	PLUMBING PLAN - DOMESTIC WATER				
P1.3	PLUMBING PLAN - NATURAL GAS				
P2.0	PLUMBING RISERS				
P3.0	PLUMBING DIMENSION PLAN				
P4.0	PLUMBING DETAILS				
P4.1	PLUMBING DETAILS				
P5.0	PLUMBING SPECIFICATIONS				
M1.1	HVAC PLAN				
M2.0	HVAC DETAILS				
M3.0	MECHANICAL SCHEDULES				
M4.0	MECHANICAL SPECIFICATIONS				
W1.1	WIRING CONTROL DIAGRAMS				
H1.1	HOOD DETAILS-GRILLE HOOD (CAPTIVE AIRE OPTION)				
H1.2	HOOD DETAILS-FRYER HOOD (CAPTIVE AIRE OPTION)				
H1.3	HOOD DETAILS-FIRE SUPPRESSION (CAPTIVE AIRE OPTION)				
H1.4	HOOD DETAILS-FANS (CAPTIVE AIRE OPTION)				
H1.5	HOOD DETAILS-WIRING (CAPTIVE AIRE OPTION)				
H1.1	HOOD DETAILS-GRILLE HOOD (HALTON OPTION)				
H1.2	HOOD DETAILS-FRYER HOOD (HALTON OPTION)				
H1.3	HOOD DETAILS-FIRE SUPPRESSION (HALTON OPTION)				
E1.1	ELECTRICAL SITE PLAN				
E2.1	POWER PLAN				
E2.2	POWER AND IT PLAN				
E2.3	POWER ROOF PLAN				
E3.1	ELECTRICAL DISTRIBUTION PLAN				
E3.2	KITCHEN EQUIPMENT SCHEDULES				
E4.1	SECURITY PLAN				
E5.1	ELECTRICAL ELEVATIONS AND DETAILS				
E6.0	ELECTRICAL SPECIFICATIONS				
SP1	SPECIFICATIONS				
SP2	SPECIFICATIONS				
SP3	SPECIFICATIONS				

PROJECT TEAM DIRECTORY

CLIENT	WENSPOK
	503 E 2ND SUITE B
	SPOKANE, WA 99208
	TEL: 509-326-6333
	FAX:
	CONTACT: JENNIFER ROBSON
	E-MAIL: JROBSON@WENSPOK.COM
ARCHITECT	RUSSELL C PAGE ARCHITECTS
	204 N DIVISION STE 'E'
	SPOKANE, WA 99202
	CONTACT: RUSS PAGE
	TEL: 509-467-9748
	FAX: 509-467-9817
RESTAURANT DESIGN	THE WENDY'S COMPANY
	ONE DAVE THOMAS BLVD.
	DUBLIN, OH. 43017
	CONTACT:
	TEL:
	FAX:
MEP ENGINEER	-
	-
	-
	CONTACT: -
	TEL: -
	FAX: -
STRUCTURAL ENGINEER	T, D & H ENGINEERING
	303 E 2ND
	SPOKANE, WA 99202
	CONTACT: LEE FRENCH
	TEL: (509) 622-2888
GENERAL CONTRACTOR	ASSOCIATED CONSTRUCTION
	2904 N MEDELIA
	SPOKANE, WA 99207
	CONTACT: BRANDON SMITH
	TEL: (509) 489-0563
	CELL: (509) 850-6497

Russell C. Page ARCHITECTS
204 N. Division Street, Suite 'E'
Spokane, WA 99202
(509) 467-9748 Fx: (509) 467-9817

VICINITY MAP

PROJECT TYPE: NEW SMART 55 SQE

Wendy's®
HIGHWAY 95
PONDERAY, ID 83852

REV.	DATE	DESCRIPTION
△		
△		

ISSUE DATE: 5-28-2020
PROJECT NUMBER: 20-113
DRAWN BY: MD XXX
CHECKED BY: XXX

SEAL

LICENSED ARCHITECT AR 894311
5/14/20
RUSSELL C. PAGE
STATE OF IDAHO

SHEET NAME
COVER SHEET

SHEET NUMBER
G1.1

8/10/2020, 10:00 AM, N:\Home\20-113 WENDYS PONDERAY\10_SMART_55-SQUARE_G1_1_Coversheet.dwg, user

LEGEND

	EGRESS PATH
	AREA SERVED & EXIT SEPARATION DIAGONAL
	EGRESS TRAVEL PATH
	COMMON PATH OF TRAVEL
	OCCUPANT AREA BOUDARY

SEATING AT TABLES (1017.4)

- EGRESS PATH: 44"
- AISLE: 36" W. MIN. BTW. TABLES, NO CHAIR
- AISLE ACCESS WAY: 12" W. MIN.
  - 19" FOR ADJACENT CHAIR (EITHER SIDE)
  - 38" FOR CHAIRS BOTH SIDES
  - 1/2"/FT. FOR EA. FT. > 12'; 30' MAX. LENGTH UNTIL CHOICE OF TWO EXIT PATHS

EXIT ACCESS TRAVEL DISTANCE

A	TRAVEL DISTANCE PERMITTED: 200' MAX. TRAVEL DISTANCE PROVIDED: 38' COMMON PATH OF TRAVEL PERMITTED: 75' MAX COMMON PATH OF TRAVEL PROVIDED: 20'
B	TRAVEL DISTANCE PERMITTED: 200' MAX. TRAVEL DISTANCE PROVIDED: 60' COMMON PATH OF TRAVEL PERMITTED: 75' MAX COMMON PATH OF TRAVEL PROVIDED: 34'

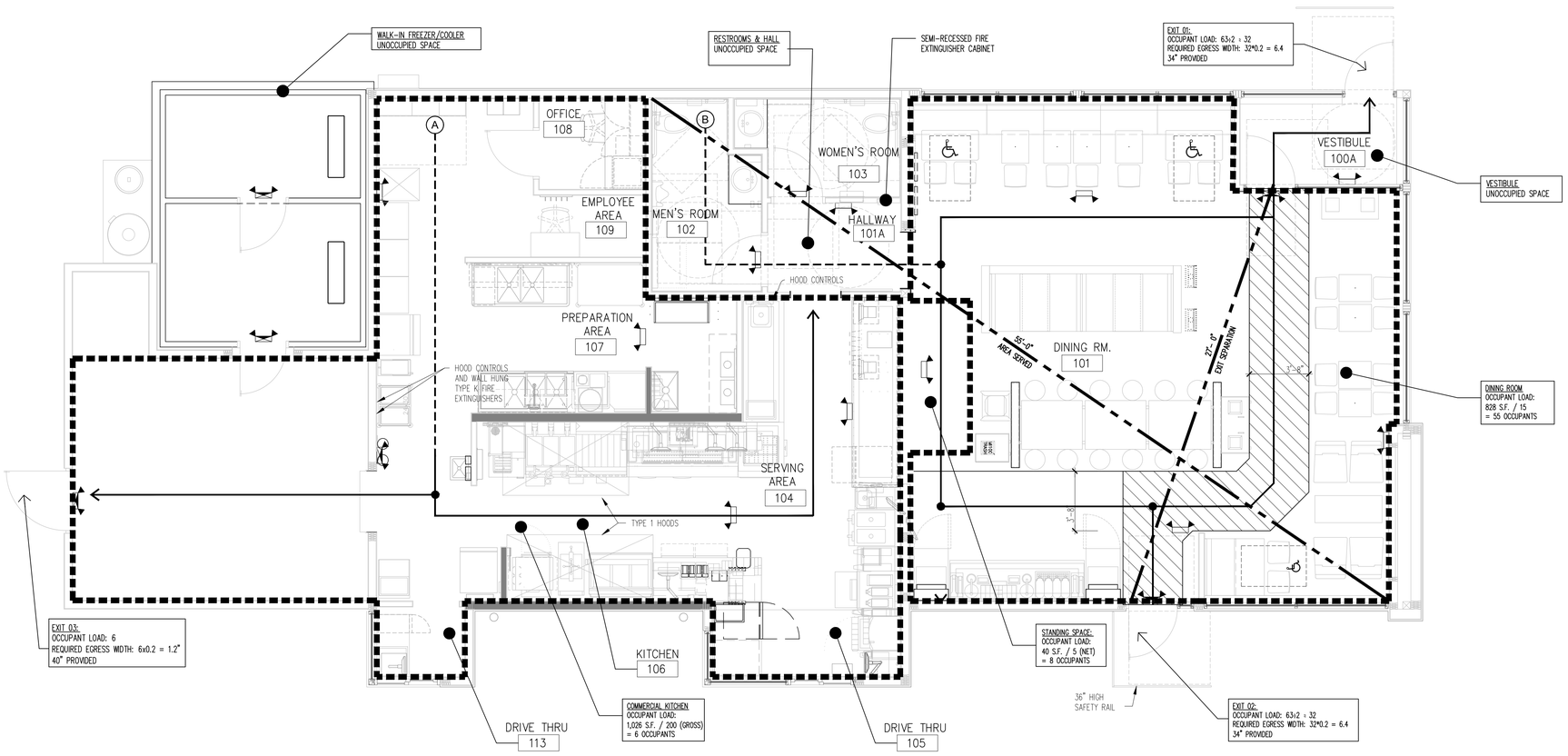

LIFE SAFETY PLAN

SCALE: 1/4"=1'-0"

SITE NUMBER:	12281
BASE MDL:	SMART 55 - SQUARE 2017
ASSET TYPE:	FRANCHISEE
CLASSIFICATION:	NEW
OWNER:	WENSPOK
BASE VERSION:	2017
UPGRADE CLASSIFICATION:	NEW BUILD
PROJECT YEAR:	2020
FURNITURE PACKAGE:	2016 V3
DRAWING RELEASE	JANUARY 2020

Russell C. Page ARCHITECTS
204 N. Division Street, Suite 'E'
Spokane, WA 99202
(509) 467-9748 Fx: (509) 467-9817

PROJECT TYPE: NEW
SMART 55 SQE

Wendy's®

HIGHWAY 95
PONDERAY, ID 83852

REV.	DATE	DESCRIPTION

ISSUE DATE: 5-28-2020

PROJECT NUMBER: 20-113

DRAWN BY: MDXXX

CHECKED BY: XXX

SEAL

LICENSED ARCHITECT AR 984311
RUSSELL C. PAGE
STATE OF IDAHO

SHEET NAME
LIFE SAFETY PLAN

SHEET NUMBER
G1.2

8/10/2020, 10:01 AM, N:\Home\20-113 WENDYS PONDERAY\10_SMART_55-SQUARE_G1_2_Life Safety.dwg, user

APPROVED SUPPLIER LIST

SHADING INDICATES PRODUCT IS AVAILABLE THROUGH CONSOLIDATOR

PRODUCT	CONTACT INFORMATION
CONSOLIDATOR	
	HJC HAINES, JONES AND CADBURY WENDY'S CSR TEAM 800-459-7099 WENDYS@HJCINC.COM
DIVISION 3 - CONCRETE	
PRE-TINTED CONCRETE	CHEMMASTERS MADISON, OHIO 800-486-7866 ATTN: CLAUDIA BENTLEY
DIVISION 5 - METALS	
DUMPSTER ENCLOSURE, GATES, AND HARDWARE (KNOTWOOD ENCLOSURE)	KNOTWOOD 360-433-9403 ATTN: K'LEB SHIVVERS KSHIVVERS@OMNIMAX.COM TECHNICAL SUPPORT 888-488-8440 KNOTWOODTECH@OMNIMAX.COM
DUMPSTER GATES AND HARDWARE	FORTIN WELDING COLUMBUS, OH 614-291-4342 ATTN: BOB FORTIN BOB@FORTINIRONWORKS.COM
PEDESTRIAN SAFTEY RAIL	HJC - REFER TO CONSOLIDATOR FORTRESS RAILING PRODUCTS WWW.FORTRESSRAILING.COM
DIVISION 6 - WOOD, PLASTICS AND COMPOSITES	
ROOF JOISTS, MICRO-LAM BEAMS	REDBUILT COLUMBUS, OH 614-595-3749 ATTN: JAKE SHEPHERD JSHEPHERD@REDBUILT.COM
MILLWORK	SEE "KITCHEN EQUIPMENT"
DIVISON 7 - THERMAL AND MOISTURE PROTECTION	
ROOFING PRODUCTS	DUROLAST ROOFING INC. SAGINAW, MI 614-370-5569 ATTN: MIKE SUMAN MSUMAN@DURO-LAST.COM
	SARNAFIL ROOFING SYSTEMS CANTON, MA 608-270-0053 ATTN: BEN BIEDRZYCKI BIEDRZYCKI.BEN@US.SIKA.COM
KNOTWOOD	KNOTWOOD 360-433-9403 ATTN: K'LEB SHIVVERS KSHIVVERS@OMNIMAX.COM TECHNICAL SUPPORT 888-488-8440 KNOTWOODTECH@OMNIMAX.COM
EIFS	STO CORP ATLANTA, GA 616-437-2230 ATTN: RAY REDMOND RREDMOND@STOCORP.COM
	DRYVIT SYSTEMS INC. WARWICK, RI 734-276-0404 ATTN: ROBERT DAZEL RDAZEL@DRYVITSYSTEMS.COM
ACM (OPTIONAL)	ALCOA BUILDING & CONSTRUCTION SYSTEMS MACON, GA 478-319-0139 ATTN: KEVIN JUEDEMAN KEVIN.JUEDEMAN@ARCONIC.COM
PREMANUFACTURED FASCIA AND SOFFITS (OPTIONAL)	CLADDING & COMPONENT SOLUTIONS CUMMING, GA 770-887-2777 ATTN: STEPHEN ROEGGE SROEGGE@CCSIMAGEGROUP.COM
NICHIHA FIBER CEMENT (OPTIONAL)	NATIONAL BRANDS JOHNS CREEK, GA 770-805-9466 ATTN: MATT STEPHENSON MSTEPHENSON@NICHIHA.COM
DIVISION 8 - DOORS AND WINDOWS	
DOORS AND HARDWARE	HAMILTON PARKER COLUMBUS, OH 614-358-7806 ATTN: JIM CAMPBELL JIMCAMPBELL@HAMILTONPARKER.COM
STOREFRONT	KAWNEER COMPANY, INC FRANKLIN, IN 317-771-9263 ATTN: CHERYL WILKERSON CHERYL.WILKERSON@ALCOA.COM
	OLDCASTLE BUILDING ENVELOPE TERRELL, TX 651-253-5062 ATTN: MARK LEHMAN MLEHMAN@OLDCASTLE.COM
	TUBELITE WALKER, MI 972-551-6386 ATTN: KENT BAUGHMAN KBAUMANN@TUBELITEINC.COM
	US ALUMINUM 213-309-3628 ATTN: BRAD THURMAN BRAD_THURMAN@CRLAURENCE.COM
GLAZING	GUARDIAN GLASS AUBURN HILLS, MI 810-964-0074 ATTN: KREG HATFIELD KHATFIELD@GUARDIAN.COM
	VITRO ARCHITECTURAL GLASS (FORMERLY PPG GLASS) INDIANAPOLIS, IN 630-962-4800 ATTN: JOSEPH SENNESE
PICK-UP WINDOW (PUW)	QUIKSERV / EASI-SERV HOUSTON, TX BRIAN HANSON 800-388-8307 BRIAN.HANSON@EASI-SERV.COM
DIVISION 9 - FINISHES	
SUSPENDED ACOUSTICAL CEILING	ARMSTRONG ORDERING: HAINES, JONES AND CADBURY (HJC)
FRP PANELING	HJC - REFER TO CONSOLIDATOR
WALL COVERINGS	KOROSEAL FAIRLAWN, OH 330-664-2062 ATTN: JOHN PALAZZO
INTERIOR BLADE FINISH PACKAGE	TDS CUSTOM CABINETS ORDERING: HAMILTON PARKER
PAINT	AVAILABLE THROUGH LOCAL RETAIL LOCATIONS. CONTACT NATIONAL ACCOUNT REP'S BELOW FOR TECHNICAL QUESTIONS ONLY
	BENJAMIN MOORE & COMPANY (TECHNICAL SUPPORT) CLEVELAND, OH 330-353-3850 ATTN: DOROTHY HAZINSKI DOROTHY.HAZINSKI@BENJAMINMOORE.COM
	MDC WALCOVERING (TECHNICAL SUPPORT) ELKGROVE VILLAGE, IL 800-621-4006 x8338 ATTN: JAN PREWITT
	SHERWIN WILLIAMS (TECHNICAL SUPPORT) 614-841-7723 ATTN: ROGER HALL
	PITTSBURG PAINTS (PPG) (TECHNCIAL SUPPORT) ATTN: RICK GARLIN GARLIN@PPG.COM
COATING STUCCO / EIFS REFINISH	STO CORP ATLANTA, GA 616-437-2230 ATTN: RAY REDMOND RREDMOND@STOCORP.COM
SIGN PAINT	(REFER TO SIGN VENDORS)
GROUT, THINSET, AND WATERPROOFING MEMBRANE	LATICRETE INTERNATIONAL INC. ORDERING: HAINES, JONES AND CADBURY (HJC)
TILE	CROSSVILLE CERAMICS ORDERING: HAINES, JONES AND CADBURY (HJC)
LUXURY VINYL TILE	DAVIS FLOORS 978-209-5400 x202 ATTN: JOHN ROCHE
CORNER GUARDS	ORDERING: HAINES, JONES AND CADBURY (HJC)
WALLCOVERINGS	ORDERING: HAINES, JONES AND CADBURY (HJC) (SEE "CORNER GUARDS" ABOVE FOR SUPPLIER)
SOLID SURFACE MATERIAL	OHIO VALLEY SUPPLY CINCINNATI, OH 800-696-5608 x3310 ATTN: JEFF HEDGES JEFF.HEDGES@OVSCO.COM
DIVISION 10 - SPECIALTIES	
DRIVE THRU CANOPY (PUW AWNINGS & ORDER POINT)	GLOBAL AWNING MONROE, LA 318-699-0088 ATTN: TREY O'BRYANT TREY@GLOBALAWNINGS.COM
	NATIONAL SIGN SYSTEMS COLUMBUS, OH 614-850-2547 ATTN: JOSH JETT OR CUSTOMER SERVICE JJET@NATSIGNSYS.COM
	PERSONA, INC. WATERTOWN, SD 800-843-9888 X266 ATTN: MIKE JOGENSEN MJOGENSEN@PERSONASIGNS.COM
INTERIOR MENU BOARD (DIGITAL), INTERIOR QUEING BOARDS (DIGITAL) & TELEVISIONS	THE WENDY'S COMPANY; IT DEPARTMENT
CUSTOMER ORDER KIOSKS & CUSTOMER ORDER PICKUP SCREEN	THE WENDY'S COMPANY; IT DEPARTMENT
EXTERIOR MENU BOARDS AND PRE-SELL BOARDS, PYLON / MONUMENT SIGNS, EXTERIOR BUILDING SIGNAGE, INTERIOR MENU AND QUEUING BOARDS (NON-DIGITAL), INTERIOR ILLUMINATED SIGNAGE (DRINK UP & PICK UP FOR 2.0 ONLY)	CUSTOM SIGN CENTER COLUMBUS, OH 614-300-4270 ATTN: MICHAEL ANDERSON MICHAEL@CUSTOMSIGNCENTER.COM
	ID ASSOCIATES DOTHAN, AL 888-303-5534 ATTN: BETHANY BROOKS BBROOKS@IDASSOCIATES.COM
	NATIONAL SIGN SYSTEMS COLUMBUS, OH 614-850-2547 ATTN: JOSH JETT OR CUSTOMER SERVICE JJET@NATSIGNSYS.COM
	PERSONA, INC. WATERTOWN, SD 800-843-9888 X266 ATTN: MIKE JOGENSEN MJOGENSEN@PERSONASIGNS.COM
ART PACK ELEMENTS AND WAYFINDINGS	CREATIVE PALETTE, INC COLUMBUS, OH 614-575-1515 CARLA ROHR CROHR@CREATIVEPALETTEINC.COM
LADDER RECEIVER	LADDERTECH, LLC BRIGHTON, MI 800-770-8851 ATTN: MICHELE ORAS OR CUSTOMER SERVICE MICHELE@LADDERPORT.COM
FIREPLACE	ORDERING: HAINES, JONES AND CADBURY (HJC)
RESTROOM ACCESSORIES	ORDERING: HAINES, JONES AND CADBURY (HJC)
WINDOW SHADES **3 WEEK LEAD TIME**	ROLL-A-SHADE LAKE ELSINORE, CA 951-245-5077 x120 ATTN: CARI McCOY WENDYS@ROLLASHADE.COM
SAFETY EQUIPMENT	AEI AYDELOTT EQUIPMENT INC. CENTERVILLE, OH 888-293-3568 OR 937-435-8220 ATTN: NICHOLE AYDELOTT NAYDELOTT@AYDELOTT.COM
BACK OF HOUSE CASH SAFE (N0508) (OPTIONAL)	AMPHION RANCHO CUCAMONGO, CA 844-996-9267 PAIG PARISH WENDY.SAFES@AMPHION.BIZ
SMART SAFE (N0501) (OPTIONAL)	ARMORED CAR SERVICE
SECURITY CAMERA SYSTEM	CONSULT QSCC RESOURCES GUIDE COMPANY RESTAURANTS SECURITY SOURCE ADRIAN COX 978-987-4011 ACOX@SECURITYSOURCE.COM
ALARM SYSTEM	CONSULT QSCC RESOURCES GUIDE COMPANY RESTAURANTS ADT BILL ROSE CHARLOTTE, NC 704-791-7052 WILLIAMROSE@ADT.COM
FIRE ALARM	CONSULT QSCC RESOURCES GUIDE ADT / PROTECTION 1 BILL ROSE CHARLOTTE, NC 704-791-7052 WILLIAMROSE@ADT.COM
CO2 MONITOR	CONSULT QSCC RESOURCES GUIDE CO2METER, INC. MELYSSIA SANTIAGO OFFICE: 386-310-4933 EXT: 108 MELYSSIA.SANTIAGO@CO2METER.COM
DIVISION 11 - EQUIPMENT	
KITCHEN EQUIPMENT DISTRIBUTOR (KED)	AEI AYDELOTT EQUIPMENT INC. CENTERVILLE, OH 888-293-3568 OR 937-435-8220 ATTN: HERB AYDELOTT HAYDELOTT@AYDELOTT.COM
	N. WASSERSTROM AND SONS COLUMBUS, OH 614-737-8659 ATTN: CONOR KENNEDY CONORKENNEDY@WASSERSTROM.COM
	S & G DISTRIBUTING HILLIARD, OH 614-334-3636 ATTN: TAYLOR HEILBRONNER TAYLOR_HEILBRONNER@SGMGROUP.COM
DIVISION 12 - FURNISHINGS	
DINING ROOM FURNITURE	(SEE KITCHEN EQUIPMENT ABOVE)
PATIO FURNITURE	EMUAMERICAS, LCC 303-733-3385 X220 DANIEL FARROW NATIONALACCOUNTS@EMUAMERICAS.COM
	RECYCLE DESIGN ANDERSON, IN 765-374-0316 ATTN: JOSH BOUTWELL JBOUTWELL@RECYCLEDESIGN.COM
DIVISION 13 - SPECIAL CONSTRUCTION	
WALK-IN COOLER / FREEZER	INTERNATIONAL COLD STOREAGE WICHITA, KS 316-218-4177 ATTN: LISA MOORE LISA.MOORE@ICSCO.COM
	IMPERIAL BROWN PORTLAND, OR 503-328-6806 ATTN: KRISTY HEATLEY KHEATLEY@IMPERIAL-BROWN.COM
DIVISION 22 - PLUMBING	
WATER HEATERS	ORDERING: HAINES, JONES AND CADBURY (HJC)
PLUMBING FIXTURES	ORDERING: HAINES, JONES AND CADBURY (HJC)
DIVISION 23 - HVAC	
HVAC EQUIPMENT	TRANE COLUMBUS, OH 866-986-4822 ATTN: MARTY CUSICK MJCUSIAK@TRANE.COM
	CARRIER 630-520-9151 ATTN: MATT MURPHY MATT.MURPHY@CARRIER.UTC.COM
	AAON CORKEN APPLIED PRODUCTS 937-432-6099 ATTN: JIM PEED JIM@PREFERREDEQUIPMENT.NET
EXHAUST HOODS / EXHAUST FANS	CAPTIVEAIRE 800-825-3143 ATTN: STEVE LUDDY STEVE.LUDDY@CAPTIVEAIRE.COM
	HALTON (SIMPLE MISSION) SCOTTSVILLE, KY 770-598-0531 ATTN: BRENT COX BCOX.SIMPLEMISSION@GMAIL.COM
AIR CURTAINS (ABOVE PUW, AS REQUIRED BY CODE)	QUIKSERV CORP / EASI-SERV HOUSTON, TX BRIAN HANSON 800-388-8307 BRIAN.HANSON@EASI-SERV.COM
DIFFUSERS	ORDERING: HAINES, JONES AND CADBURY (HJC)
TEST AND BALANCE PROVIDERS	CONSULT QSCC RESOURCES GUIDE NATIONAL TAB 855-682-NTAB ATTN: DON HERTENSTEIN DAN@NATIONALTAB.COM
	CONSULT QSCC RESOURCES GUIDE MELINK 513-965-7300 WENDYS@MELINK.COM
	CONSULT QSCC RESOURCES GUIDE AIR SOLUTIONS & BALANCING LLC. 603-262-9292 x709 ATTN: STEVE BUELTERMAN STEVE.BUELTERMAN@USABALANCING.COM
DIVISION 24 - ELECTRICAL SYSTEMS	
MODULAR ELECTRICAL PANEL SYSTEMS *ORDER IMMEDIATELY - LONG LEAD TIME ITEM*	CAROLINA PRODUCTS INC. CHARLOTTE, NC 704-364-9029 ATTN: BRYAN STRYKER BRYANS@CPIPANELS.COM
INTERIOR AND BUILDING LIGHTS	ORDERING: HAINES, JONES AND CADBURY (HJC)
	LOEB ELECTRIC COLUMBUS, OH 888-563-2669 ATTN: WENDY'S PROJECT TEAM WENDYSPROJECTS@LOEBELECTRIC.COM
	VILLA LIGHTING ST LOUIS, MO RONDA SCHRAGE 314-633-0536 WENDYS@VILLALIGHTING.COM
SITE LIGHTING	ORDERING: HAINES, JONES AND CADBURY (HJC)
	DESIGN & ORDERING: LSI INDUSTRIES CINCINNATI, OH LINDA McMULLEN 513-372-3101 LINDA.MCMULLEN@LSI-INDUSTRIES.COM
	DESIGN & ORDERING: LOEB ELECTRIC COLUMBUS, OH 888-563-2669 ATTN: WENDY'S PROJECT TEAM WENDYSPROJECTS@LOEBELECTRIC.COM
DIVISION 32 - EXTERIOR IMPROVEMENTS	
BOLLARD COVERS	ORDERING: HAINES, JONES AND CADBURY (HJC) POST GUARD
OTHER VENDORS	
FREESTYLE MACHINE	COCA-COLA MATT DOWHY 404-676-0451 MDOWHY@COCA-COLA.COM
USED COOKING OIL TANK AND ENCLOSURE *TYPICALLY PROVIDED THROUGH USED COOKING OIL RECOVERY SUPPLIER*	CONSULT QSCC RESOURCES GUIDE DAR PRO SOLUTIONS COLD SPRINGS, KY 248-214-2699 JIM SCHMIEDER JSCHMIEDER@DARPRO.COM
	CONSULT QSCC RESOURCES GUIDE MAHONEY ENVIROMENTAL JOLIET, IL 800-892-9392; 317-339-6282 JACK REEVES JACKR@MAHONEYES.COM
	CONSULT QSCC RESOURCES GUIDE VALLEY PROTEINS, LCC 800-871-3406 OR 540-877-2092 CUSTOMER SERVICE / RON ROGERS RROGERS@VALLEYPROTEIN.COM
FLAG POLE (OPTIONAL)	AMERICAN FLAGPOLE AND FLAG CO 800-426-6235 OR 651-777-0172 MATT KNOWLAN MKNOWLAN@AFLAG.COM
GREASE INTERCEPTOR TANK	SCHIER GREASE INTERCEPTOR TANK 816-506-3203 SEAN MOLEN SEAN.MOLEN@SHIERPRODUCTS.COM
	ZURN GREASE INTERCEPTOR TANK CONTACT HJC
BULK CO2 STORAGE	CONSULT QSCC RESOURCES GUIDE AIRGAS NATIONAL CARBONATION STEVE GREGG, STRATEGIC ACCOUNT MANAGER 719-434-1006 STEVEN.GREGG@AIRGAS.COM
	CONSULT QSCC RESOURCES GUIDE ARC3 GASES MIKE LYONS 919.820.1800 MICHAEL.LYONS@ARC3GASES.COM
	CONSULT QSCC RESOURCES GUIDE NUCO2 HEATHER SHEPHERD CUSTOMER SERVICE: 800-472-2855 HSHEPERD@NUCO2.COM

RESPONSIBILITY SCHEDULE

O : OWNER — 09.07.2018

KED : KITCHEN EQUIPMENT DISTRIBUTOR (CONTRACTED BY OWNER)

S: SUPPLIER CONTRACTED THROUGH OWNER — GC : GENERAL CONTRACTOR

AVAILABLE THROUGH CONSOLIDATOR

ITEM	SUPPLIED	INSTALLED	FINAL UTILITY CONNECTION	COMMENTS
EQUIPMENT (DEPICTED ON EQ SHEETS)				
KITCHEN EQUIPMENT / SHELVING	KED	KED	GC	REFER TO EQ1.1 & EQ1.2 FOR ADDITIONAL INFORMATION
DINING ROOM PACKAGE	KED	KED	N/A	
FREESTANDING DINING ROOM TABLES	KED	GC	N/A	GC TO ANCHOR TABLE BASES TO FLOOR
WIFI BAR	KED	KED	GC	
ART PACK	S	GC	N/A	
CONDIMENT / BEVERAGE BAR	KED	KED	GC	
DOUBLE SIDED GRILL	S	S	N/A	
FLY LIGHT	S	GC	N/A	
EXTERIOR				
SIGNAGE	S	S	GC	MUST BE SUPPLIED BY APPROVED VENDOR
LADDER DOCK & LADDER PORT	GC	GC	N/A	
USED COOKING OIL TANK & TANK SURROUND	KED	KED	GC	TYPICALLY PART OF U.C.O. CONTRACT
BULK Co2 TANK	S	S	S	
WALK-IN COOLER / FREEZER BOX	S	S	GC	
WALK-IN-BOX - LIGHT (1 PIECE)	S	S	GC	AOR TO REVIEW W/ OPERATOR
WALK-IN-BOX - LIGHT (PANELIZED)	S	GC	GC	AOR TO REVIEW W/ OPERATOR
PATIO FURNITURE	GC	GC	N/A	
PEDESTRIAN SAFETY RAIL & PATIO FENCE (IF REQUIRED)	GC	GC	N/A	
BOLLARD SLEEVE (BL-1)	GC	GC	N/A	
DRIVE THRU				
MENU BOARDS (STATIC)	S	S	GC	ANCHOR BOLTS BY OWNER'S SIGN INSTALLER / FOUNDATION BY GC
PRE-SELL BOARDS (STATIC)	S	S	GC	ANCHOR BOLTS BY OWNER'S SIGN INSTALLER / FOUNDATION BY GC
ORDER POINT CANOPY AND CANOPY SUPPORT POLE	S	S	GC	INCLUDES LIGHTS & HEAT TRACE / ANCHOR BOLTS SUPPLIER BY VENDOR / FOUNDATION BY GC
PUW CANOPY	S	S	GC	INCLUDES LIGHTS & HEAT TRACE / BLOCKING BY GC
ORDER CONFIRMATION DISPLAY (OCD)	S	S	S	INSTALLED BY OWNER'S IT INSTALLER / FOUNDATION BY GC
DETECTOR LOOP	S	GC	S	SUPPLIED BY OWNER'S IT INSTALLER
PICK UP WINDOW	GC	GC	GC	
INTERIOR				
CORIAN CAP & SILLS	GC	GC	N/A	
CORIAN CAP AT FRONT COUNTER	KED	GC	N/A	
WINDOW SHADES	GC	GC	N/A	
FIRE EXTINGUISHER CABINET	GC	GC	N/A	SUPPPLIED BY GC
FIRE EXTINGUISHERS (FOH & BOH)	GC	GC	N/A	GC IS RESPONSIBLE FOR EXTINGUISHER TAGS
STAINLESS STEEL CORNER GUARDS	GC	GC	N/A	
WALL COVERINGS	GC	GC	N/A	
CERAMIC / PORCELAIN TILE FLOOR, WALL & BASE	GC	GC	N/A	
CEILING TILE & GRID	GC	GC	N/A	
MECHANICAL				
HVAC UNIT EQUIPMENT PACKAGE	GC	GC	GC	REFER TO M1.1 FOR PACKAGE COMPONENTS
HVAC TEST & BALANCE	GC	GS	-	T&B REQUIRED. APPROVED SUPPLIER RECOMMENDED
REMOTE CONDENSER EQUIPMENT RAILS	GC	GC	GC	
EXHAUST HOOD PACKAGE	GC	GC	GC	REFER TO M1.1 FOR PACKAGE COMPONENTS AND ADDITIONAL INFORMATION
RESTROOM ACCESSORIES				
RESTROOM HARDWARE	GC	GC	N/A	
DISPENSERS (PAPER TOWEL, TOILET PAPER, NAPKIN DISPOSAL)	GC	GC	GC	
SOAP DISPENSERS	KED	GC	N/A	RESTROOM SOAP DISPENSER BY KED
GRAB BARS & MIRRORS	GC	GC	N/A	
FIXTURES (TOILETS, URINALS, LAVATORIES, VANITIES)	GC	GC	GC	
PLUMBING				
WATER HEATER	GC	GC	GC	REFER TO P1.2
GAS COOKING EQUIPMENT SUPPLY MANIFOLD.	GC	GC	GC	REFER TO P1.4 - ORDER FROM KED
USED COOKING OIL MANIFOLD	S	GC	GC	REFER TO P1.2
MOP SINK FAUCETS	KED	GC	GC	REFER TO EQUIPMENT SCHEDULE
REVERSE OSMOSIS SYSTEM (RO)	KED	KED	KED	REFER TO EQUIPMENT SCHEDULE
WATER FILTRATION SYSTEM	S	S	S	BY BEVERAGE EQUIPMENT INSTALLER
ELECTRICAL				
MODULAR ELECTRICAL PANEL SYSTEM	GC	GC	GC	ORDER AT OR BEFORE PROJECT START
SURGE SUPPRESSOR SYSTEM	S	GC	GC	REFERENCE E2.1 FOR LOCATION AND ADDITIONAL NOTES
LIGHT FIXTURES AND LAMPS (INTERIOR, EXTERIOR BUILDING & SITE)	GC	GC	GC	
EQUIPMENT CORD	GC	GC	N/A	SEE EQUIPMENT AND CONNECTIONS SCHEDULE SHEET E2.1
POINT OF SALE SYSTEM (POS)	S	S	S	REFERENCE E2.2 FOR ROUGH-INS BY GC
CUSTOMER SELF ORDER KIOSK	S	S	S	
CUSTOMER ORDER PICK UP SCREEN	S	S	S	
SECURITY CAMERAS / MONITORS	O	O	O	REFERENCE E4.1 FOR WORK BY GC.
TV's, CABLE, SATELLITE DISH	O	O	O	SATELLITE DISH, CABLING, AND MOUNTING HARDWARE BY OWNER. GC TO PROVIDE WEATHER PROOFING AT ROOF PENETRATION

NOTES:

1	ALL ITEMS NOT SPECIFICALLY NOTED AS "BY OWNER" OR "BY KED" ARE FURNISHED AND INSTALLED BY THE GENERAL CONTRACTOR.
2	SEE EQUIPMENT SCHEDULE COMMENT SECTION FOR ADDITIONAL EQUIPMENT TO BE CONNECTED BY GC's PLUMBING AND ELECTRICAL SUB-CONTRACTORS.
3	GENERAL CONTRACTOR SHALL RECEIVE, STORE, AND MAKE SAFE ALL OWNER AND KED SUPPLIED ITEMS.
4	SEE APPROVED SUPPLIER LIST FOR SUPPLIER CONTACT INFORMATION.
5	ALL CONDUIT, WIRING, & PIPING DEPICTED ON DRAWINGS AND/OR REQUIRED TO MAKE FINAL CONNECTIONS ARE BY GC UNLESS NOTED OTHERWISE.
6	GC TO PROVIDE BACK UP SUPPORTS AS REQUIRED.
	NOTE: IN THE EVENT OF CONFLICT BETWEEN THIS SCHEDULE AND CONSTRUCTION DETAILS, THE CONSTRUCTION DETAILS PREVAIL.

SITE NUMBER:	12281
BASE MDL:	SMART 55 - SQUARE 2017
ASSET TYPE:	FRANCHISEE
CLASSIFICATION:	NEW
OWNER:	WENSPOK
BASE VERSION:	2017
UPGRADE CLASSIFICATION:	NEW BUILD
PROJECT YEAR:	2020
FURNITURE PACKAGE:	2016 V3
DRAWING RELEASE	JANUARY 2020

Russell C. Page ARCHITECTS
204 N. Division Street, Suite 'E'
Spokane, WA 99202
(509)467-9748 Fx:(509)467-9817

PROJECT TYPE: NEW SMART 55 SQE

Wendy's

HIGHWAY 95
PONDERAY, ID 83852

REV.	DATE	DESCRIPTION
△		
△		

ISSUE DATE: 5-28-2020

PROJECT NUMBER: 20-113

DRAWN BY: MDXXX

CHECKED BY: XXX

SEAL

LICENSED ARCHITECT AR 984311
RUSSELL C. PAGE
STATE OF IDAHO

SHEET NAME

SUPPLIER'S LIST & RESPONSIBILTY SCHEDULE

SHEET NUMBER

G2.1

8/10/2020, 10:03 AM, N:\Home\20-113 WENDYS PONDERAY\10_SMART_55-SQUARE_G2_1_Supplier List.dwg, user

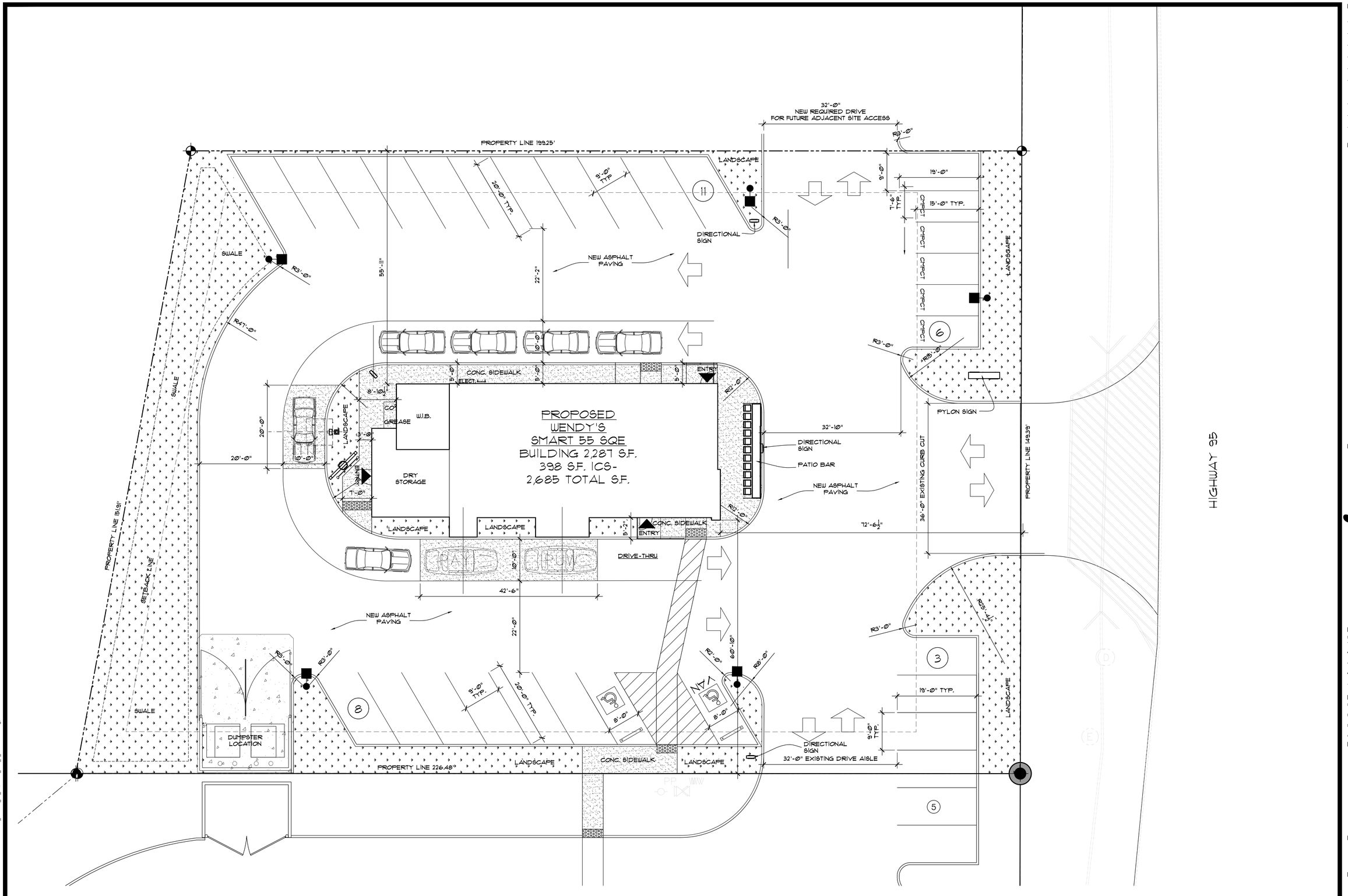

01 ARCHITECTURAL SITE PLAN
SCALE: 1" = 30'

SITE NUMBER:	12281
BASE MDL:	SMART 55 - SQUARE 2017
ASSET TYPE:	FRANCHISEE
CLASSIFICATION:	NEW
OWNER:	WENSPOK
BASE VERSION:	2017
UPGRADE CLASSIFICATION:	NEW BUILD
PROJECT YEAR:	2020
FURNITURE PACKAGE:	2016 V3
DRAWING RELEASE	JANUARY 2020

Russell C. Page ARCHITECTS
204 N. Division Street, Suite 'E'
Spokane, WA 99202
(509) 467-9748 Fax: (509) 467-9817

PROJECT TYPE: NEW SMART 55 SQE

Wendy's.

HIGHWAY 95
PONDERAY, ID 83852

REV.	DATE	DESCRIPTION

ISSUE DATE: 5-28-2020
PROJECT NUMBER: 20-113
DRAWN BY: MEK
CHECKED BY:

SEAL

LICENSED ARCHITECT AR 98431
5/14/20
RUSSELL C. PAGE
STATE OF IDAHO

SHEET NAME
OVERALL SITE PLAN

SHEET NUMBER
AS1.0

10/29/2020, 3:00 PM, N:\Hornet\20-113 WENDY'S PONDERAY\20_SMART_55_SQUARE_AS2_1_Site Details.dwg, user

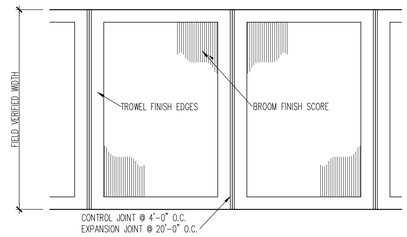

08 SIDEWALK FINISH DETAIL
SCALE: 1/2"=1'-0"

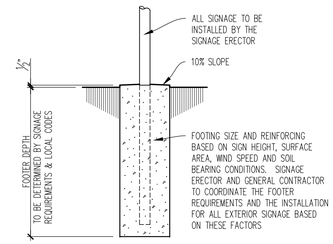

06 SIGN BASE DETAIL
SCALE: 1/2"=1'-0"

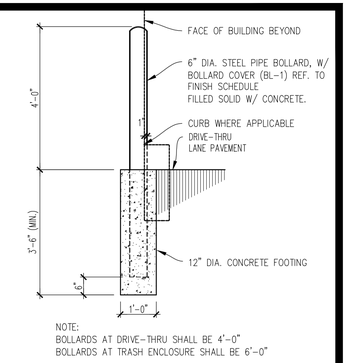

03 6" BOLLARD DETAIL
SCALE: 1/2"=1'-0"

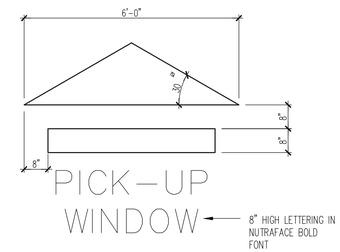

02 PAVEMENT MARKER DETAIL
SCALE: 1/2"=1'-0"

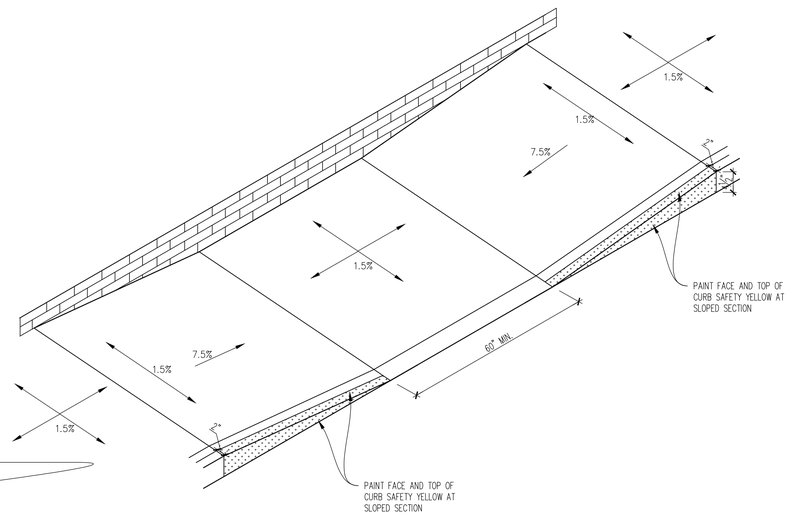

05 SIDEWALK RAMP DETAIL
SCALE: nts

EXTERIOR PARKING LOT LIGHTING NOTES

1. REFER TO SITE LIGHTING SUPPLIERS
2. PARKING LOT TO HAVE AN AVERAGE OF 4 – 6 FOOTCANDLES IN THE PAVED AREA UNLESS LOCAL CODES REQUIRE LESS
3. CONSULT WITH THE PARKING LOT LIGHT SUPPLIERS TO HAVE A PHOTOMETRIC SITE PLAN PREPARED
4. LIGHT POLE: 24'-0" HIGH, 4" DIAMETER

LIGHT POLE TO BE FURNISHED AND INSTALLED BY ELECTRICAL CONTRACTOR.
POLE AND LUMINAIRE TO BE FURNISHED BY THE SAME MANUFACTURER

POLE HEIGHT – 24'-0"
POLE DIAMETER – 4"
POLE TYPE – STEEL SQUARE
POLE FINISH – BRONZE
BOLT SIZE – 11" BOLT CIRCLE
ANCHOR BOLTS – 1"x36" W/ DOUBLE NUT AND WASHERS

FOR PROPER INSTALLATION OF SITE LIGHTING ALWAYS USE DOUBLE NUTS AND WASHERS. THIS ASSEMBLY WILL PREVENT MOISTURE BUILD-UP IN THE POLE BY ALLOWING AIR TO CIRCULATE THROUGH THE INSIDE OF POLE. BASES MOUNTED DIRECTLY TO CONCRETE CAN CAUSE A MOISTURE BUILD-UP, AND DETERIORATION OF THE POLE'S STABILITY

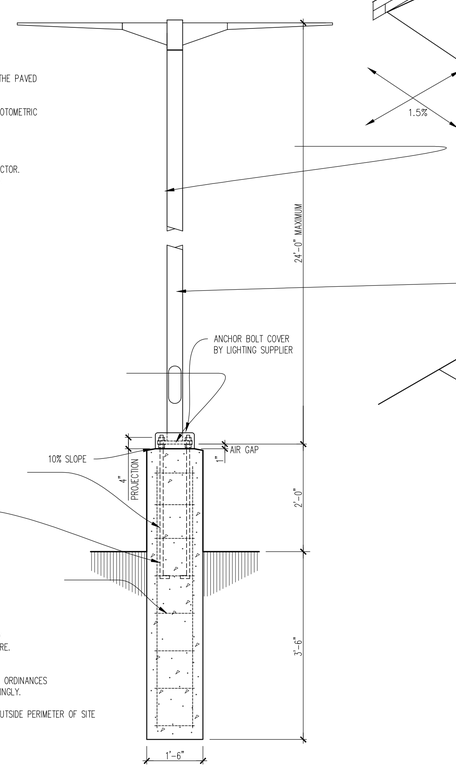

NOTE:

REINFORCING BASED ON 90 MPH WIND AND 2500 PSF SOIL BEARING PRESSURE.

LIGHTING SUPPLIER TO DETERMINE IF WIND LOADS, SOIL BEARING OR LOCAL ORDINANCES DIFFER AND ADJUST FOOTING ACCORDINGLY.

WHEN POSSIBLE, LOCATE POLES ON OUTSIDE PERIMETER OF SITE

07 EXTERIOR POLE LIGHT DETAIL
SCALE: 3/4"=1'-0"

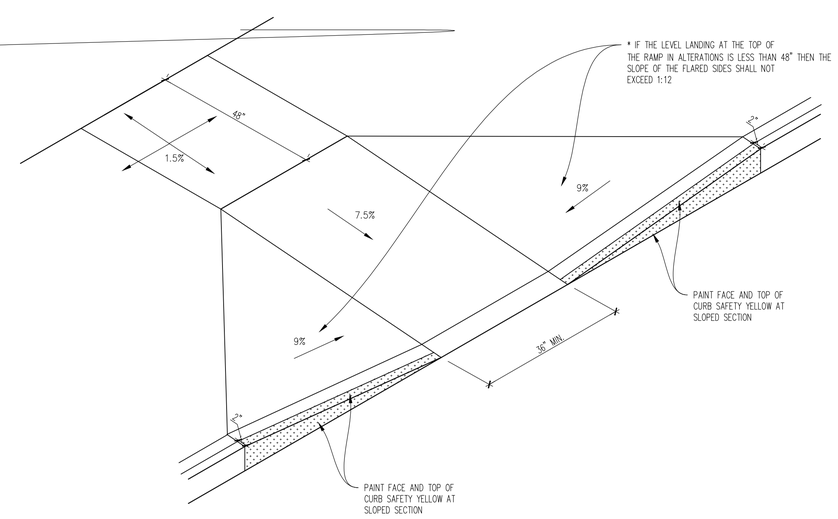

04 CURB RAMP DETAIL
SCALE: nts

NOTE: ALL CONCRETE CURBS TO HAVE EXPANSION JOINTS OR SAW CUTS NOT MORE THAN 20'-0" APART

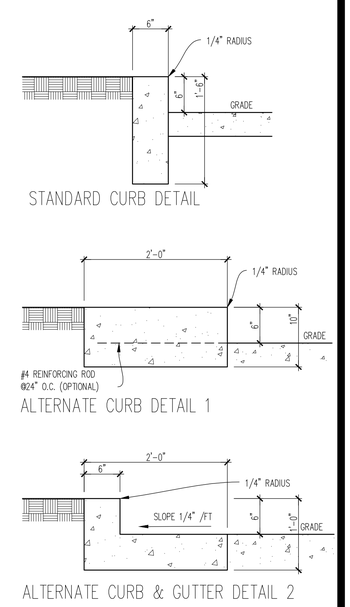

01 CONCRETE CURB DETAIL
SCALE: 1"=1'-0"

SITE NUMBER:	12281
BASE MDL:	SMART 55 - SQUARE 2017
ASSET TYPE:	FRANCHISEE
CLASSIFICATION:	NEW
OWNER:	WENSPOK
BASE VERSION:	2017
UPGRADE CLASSIFICATION:	NEW BUILD
PROJECT YEAR:	2020
FURNITURE PACKAGE:	2016 V3
DRAWING RELEASE	JANUARY 2020

Russell C. Page ARCHITECTS
204 N. Division Street, Suite 'E'
Spokane, WA 99202
(509) 467-9748 Fx: (509) 467-9817

PROJECT TYPE: NEW
SMART 55 SQE

Wendy's.
HIGHWAY 95
PONDERAY, ID 83852

REV.	DATE	DESCRIPTION
△		
△		

ISSUE DATE: 5-28-2020
PROJECT NUMBER: 20-113
DRAWN BY: MD/MEK
CHECKED BY:

SEAL

LICENSED ARCHITECT AR 98431
5/14/20
RUSSELL C. PAGE
STATE OF IDAHO

SHEET NAME
SITE DETAILS

SHEET NUMBER
AS2.1

5/14/2020 10:04 AM N:\Wendy's\13 WENDY'S PONDERAY\05 SMART 55 SQUARE - AS2.1 Site Details.dwg, pdf

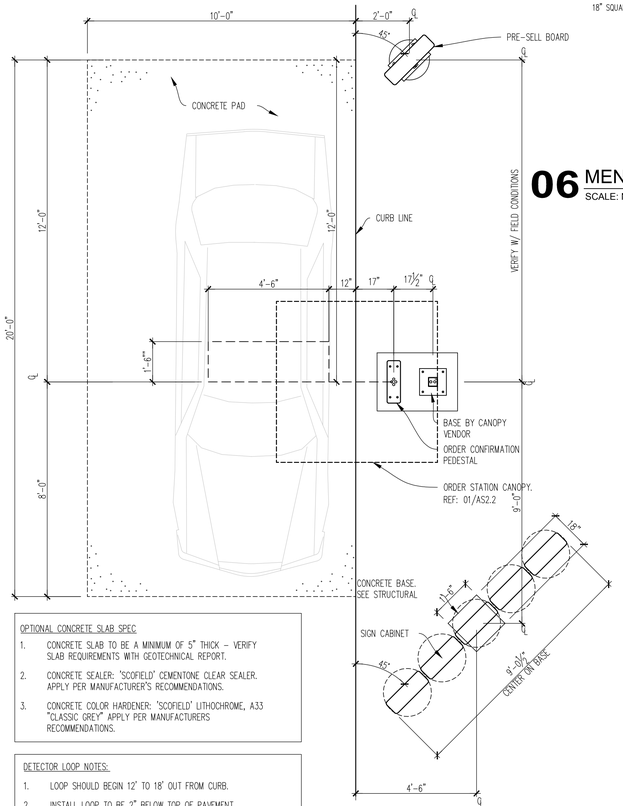

OPTIONAL CONCRETE SLAB SPEC

1. CONCRETE SLAB TO BE A MINIMUM OF 5" THICK – VERIFY SLAB REQUIREMENTS WITH GEOTECHNICAL REPORT.
2. CONCRETE SEALER: 'SCOFIELD' CEMENTONE CLEAR SEALER. APPLY PER MANUFACTURER'S RECOMMENDATIONS.
3. CONCRETE COLOR HARDENER: 'SCOFIELD' LITHOCHROME, A33 "CLASSIC GREY" APPLY PER MANUFACTURERS RECOMMENDATIONS.

DETECTOR LOOP NOTES:

1. LOOP SHOULD BEGIN 12" TO 18" OUT FROM CURB.
2. INSTALL LOOP TO BE 2" BELOW TOP OF PAVEMENT
3. THE FORWARD EDGE OF THE LOOP SHOULD BE LINED UP WITH CENTERLINE OF THE D/T WINDOW OR SPEAKER PEDESTAL
4. A 3' AREA FROM THE LOOP MUST BE KEPT CLEAR OF METAL, INCLUDING REBAR, REINFORCING MESH, OTHER ELECTRICAL CABLES OR CONDUIT.
5. SEE DETECTOR LOOP MANUFACTURER'S INSTALLATION INSTRUCTION FOR ADDITIONAL INFORMATION

NOTE: SEE A6.1 RESPONSIBILITY SCHEDULE FOR ADDITIONAL INFORMATION

07 PARTIAL PLAN VIEW
SCALE: 3/8"=1'-0"

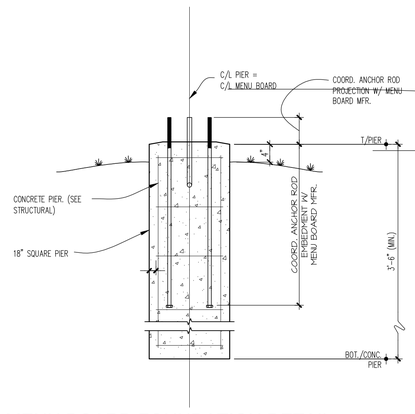

06 MENU BOARD FOUNDATION DETAIL
SCALE: N.T.S.

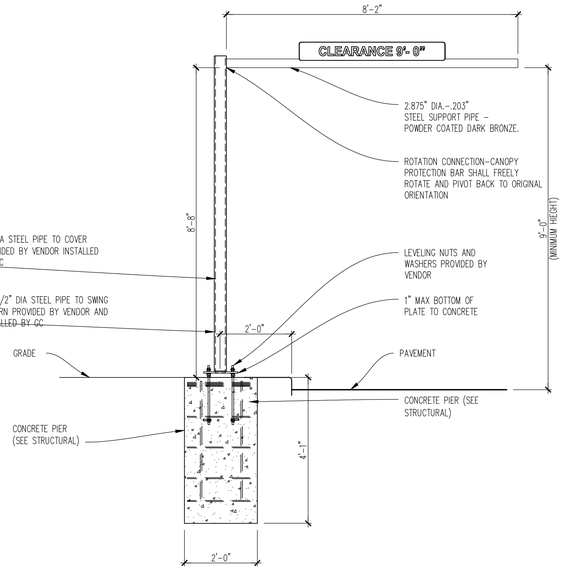

04 CANOPY PROTECTION BAR
SCALE: 1/2"=1'-0"

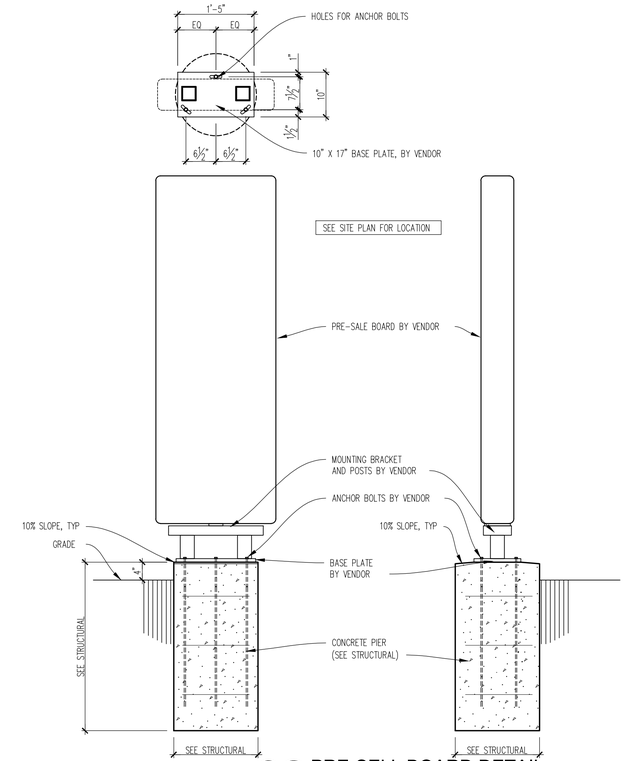

02 PRE-SELL BOARD DETAIL
SCALE: 3/4"=1'-0"

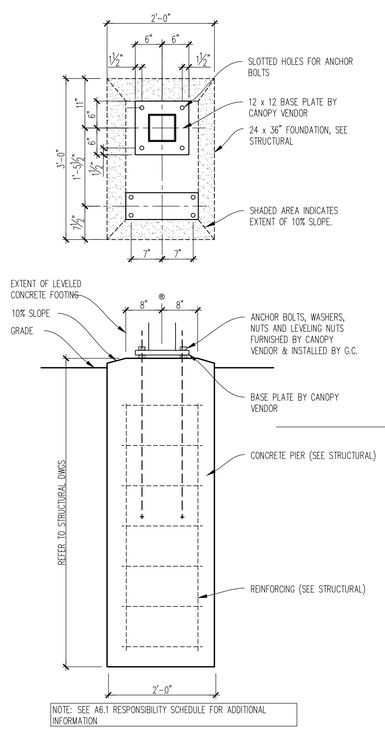

NOTE: SEE A6.1 RESPONSIBILITY SCHEDULE FOR ADDITIONAL INFORMATION

05 CANOPY FOOTING SECTION
SCALE: 3/4"=1'-0"

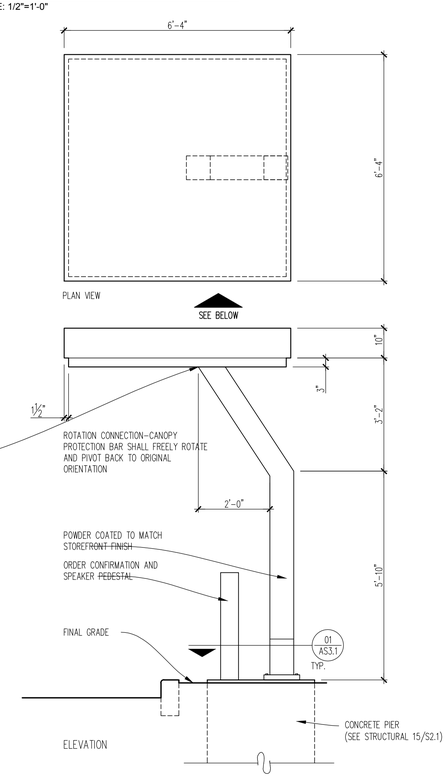

03 ORDER STATION CANOPY
SCALE: 1/2"=1'-0"

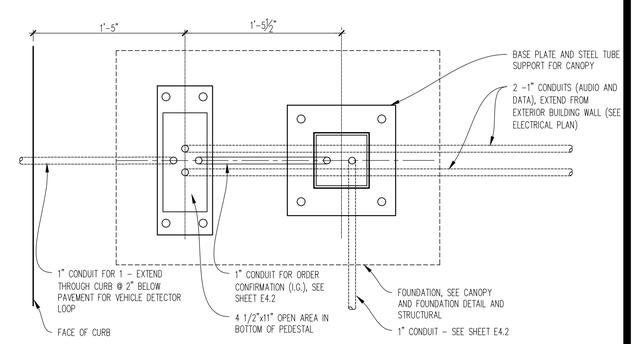

NOTE: ENSURE CONDUIT STUB–UPS ARE INSIDE OF STEEL TUBE, AND OPEN AREA OF PEDESTAL

01 CANOPY FOOTING DETAIL
SCALE: 1-1/2"=1'-0"

SITE NUMBER:	12281
BASE MDL:	SMART 55 - SQUARE 2017
ASSET TYPE:	FRANCHISEE
CLASSIFICATION:	NEW
OWNER:	WENSPOK
BASE VERSION:	2017
UPGRADE CLASSIFICATION:	NEW BUILD
PROJECT YEAR:	2020
FURNITURE PACKAGE:	2016 V3
DRAWING RELEASE	JANUARY 2020

Russell C. Page ARCHITECTS
204 N. Division Street, Suite 'E'
Spokane, WA 99202
(509) 467-9748 Fx: (509) 467-9817

PROJECT TYPE: NEW SMART 55 SQE

Wendy's.

HIGHWAY 95
PONDERAY, ID 83852

REV.	DATE	DESCRIPTION
△		
△		

ISSUE DATE: 5-28-2020

PROJECT NUMBER: 20-113

DRAWN BY: MEK

CHECKED BY:

SEAL

LICENSED ARCHITECT AR 984311
8/14/20
RUSSELL C. PAGE
STATE OF IDAHO

SHEET NAME

SINGLE LANE DRIVE-THRU ORDER STATION DETAILS

SHEET NUMBER

AS3.1

8/10/2020, 10:04 AM, N:\Home\20-113 WENDY'S PONDERAY\20_SMART_55_SQUARE_AS2_1_Site Details.dwg, user

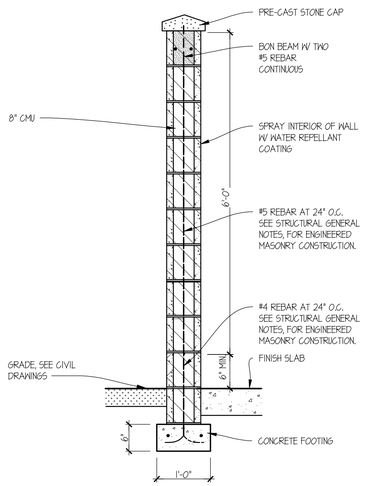

05 WALL SECTION
SCALE: 3/4"=1'-0"

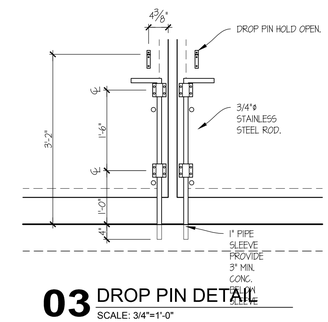

03 DROP PIN DETAIL
SCALE: 3/4"=1'-0"

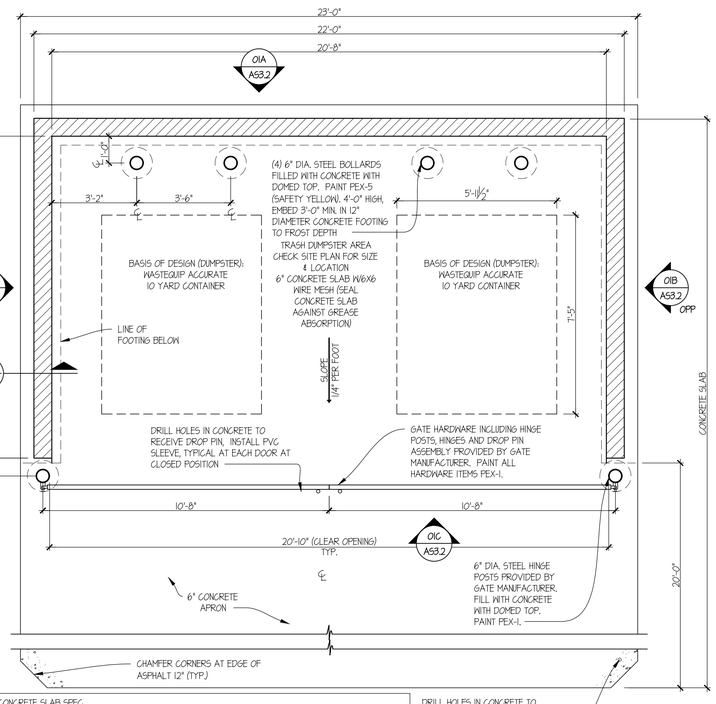

OPTIONAL CONCRETE SLAB SPEC

1. CONCRETE SLAB TO BE A MINIMUM OF 6" THICK - VERIFY SLAB REQUIREMENTS WITH GEOTECHNICAL REPORT.
2. CONCRETE SEALER: 'SCOFIELD' CEMENTONE CLEAR SEALER. APPLY PER MANUFACTURER'S RECOMMENDATIONS.
3. CONCRETE COLOR HARDENER: 'SCOFIELD' LITHOCHROME, A33 "CLASSIC GREY" APPLY PER MANUFACTURERS RECOMMENDATIONS.

02 TRASH ENCLOSURE PLAN
SCALE: 3/8"=1'-0"

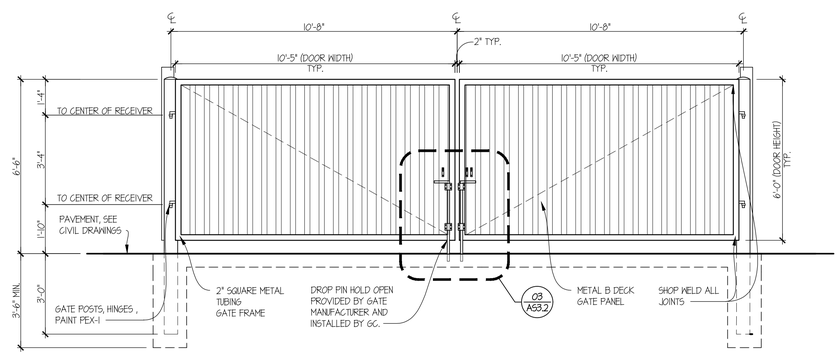

04 B DECK GATE
SCALE: 3/8"=1'-0"

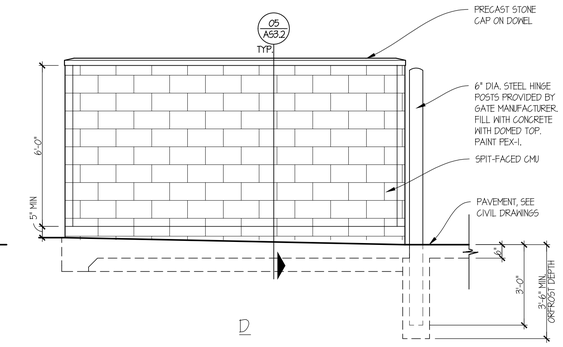

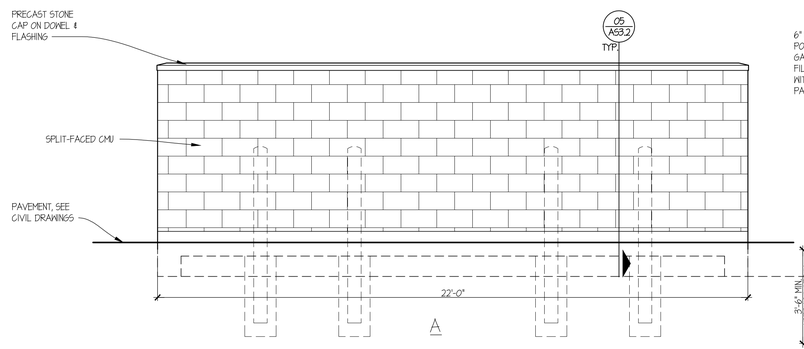

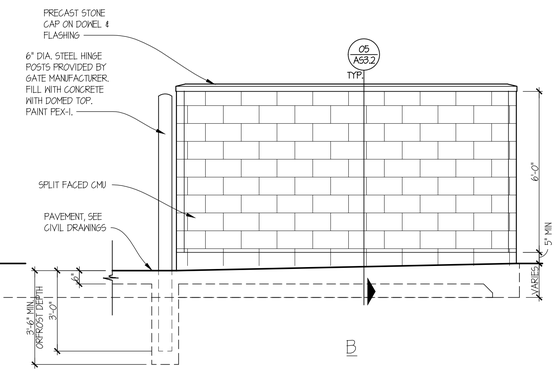

01 TRASH ENCLOSURE ELEVATIONS
SCALE: 3/8"=1'-0"

SITE NUMBER:	12281
BASE MDL:	SMART 55 - SQUARE 2017
ASSET TYPE:	FRANCHISEE
CLASSIFICATION:	NEW
OWNER:	WENSPOK
BASE VERSION:	2017
UPGRADE CLASSIFICATION:	NEW BUILD
PROJECT YEAR:	2020
FURNITURE PACKAGE:	2016 V3
DRAWING RELEASE	JANUARY 2020

Russell C. Page ARCHITECTS
204 N. Division Street, Suite 'E'
Spokane, WA 99202
(509) 467-9748 Fx: (509) 467-9817

PROJECT TYPE: NEW SMART 55 SQE

Wendy's®
HIGHWAY 95
PONDERAY, ID 83852

REV.	DATE	DESCRIPTION
△		
△		

ISSUE DATE: 5-28-2020

PROJECT NUMBER: 20-113

DRAWN BY: MEK

CHECKED BY:

SEAL

LICENSED ARCHITECT AR 984311
RUSSELL C. PAGE
STATE OF IDAHO

SHEET NAME

TRASH ENCLOSURE DETAILS

SHEET NUMBER

AS3.2

8/10/2020, 10:05 AM, N:\Home\20-113 WENDYS PONDERAY\21_SQE_55_AS3_2_Trash Enclosure.dwg, user

SITE IMPROVEMENTS

WENDY'S

A PORTION OF THE SOUTHEAST QUARTER OF SECTION 3,
TOWNSHIP 57 NORTH, RANGE 2 WEST, B.M.
CITY OF PONDERAY, BONNER COUNTY, IDAHO

LEGEND

EXISTING FEATURES

- ASPHALT SURFACING
- CURB
- GRAVEL
- SIDEWALK OR CONCRETE
- FOUND POINT AS NOTED
- DRYWELL
- STORM MANHOLE
- CATCH BASIN
- GUY WIRE POLE
- POWER POLE/TELEPHONE POLE
- LIGHT POLE
- TELEPHONE ENCLOSURE
- WATER VALVE
- FIRE HYDRANT
- SANITARY SEWER MANHOLE
- TREE (DECIDUOUS OR CONIFEROUS)
- WATER LINE
- SANITARY SEWER LINE
- STORM DRAIN LINE / CULVERT
- POWER LINE (OHP OR BP)
- TELEPHONE LINE (OHT OR BT)
- GAS LINE
- CONTOURS
- FENCE
- FIBER OPTIC LINE

PROPOSED IMPROVEMENTS

- ASPHALT SURFACING
- CURB
- CONCRETE OR SIDEWALK
- DRYWELL
- STORM MANHOLE
- CONCRETE INLET
- CURB INLET
- POWER POLE
- SIGN
- WATER VALVE
- WATER METER
- FIRE HYDRANT
- WATER SHUTOFF / WATER VAULT
- SANITARY SEWER MANHOLE
- CLEANOUT (CO)
- GAS METER
- WATER LINE (AS SIZED)
- SLEEVE FOR WATER / SEWER CROSSING
- SANITARY SEWER LINE
- STORM DRAIN LINE / CULVERT
- CONTOURS
- STORM WATER SWALE / POND
- DIRECTION OF SURFACE STORM WATER DRAINAGE
- 1924.50 / 1924.00 — TOP OF CURB ELEVATION / FLOWLINE ELEVATION
- CURB INLET 1924.00 — CURB INLET / INLET ELEVATION AT FLOWLINE
- 1924.00 — FINISHED GRADE ELEVATION

BASIS OF BEARING

THE IDAHO COORDINATE SYSTEM OF 1983, WEST ZONE, (1103) – US SURVEY FT. THE PROJECT GPS CONTROL COORDINATES WERE DERIVED FROM NGS OPUS SOLUTIONS USING A REFERENCE FRAME OF NAD83 (2011)(EPOCH: 2010.0000). DISTANCES SHOWN ARE GROUND USING A COMBINED ADJUSTMENT FACTOR (CAF) OF 1.00012095. GEODETIC NORTH IS AN ANGULAR ROTATION OF –0°36'10" AT THE SOUTH QUARTER CORNER OF SECTION 3.

CONTOUR INFORMATION SHOWN IS BASED ON THE NORTH AMERICAN VERTICAL DATUM OF 1988 (NAVD 88)–GEOID 12A.

VERTICAL DATUM ADJUSTMENT

VERTICAL DATA ON HIGHWAY PROJECT NO. NH–IR–F–5116 (049), KEY NO. 1509 WAS BASED ON CONTROL COORDINATES USING THE NATIONAL GEODETIC VERTICAL DATUM OF 1929 (NGVD 29) AND EXPRESSED IN METRIC UNITS.

TO CONVERT VERTICAL DATA TO FROM NGVD 29–METRIC TO NAVD 88–U.S. SURVEY FEET, FIRST CONVERT THE ELEVATION TO U.S. SURVEY FEET BY MULTIPLYING IT BY 3.280833333, THEN APPLY A FACTOR OF +3.90 FEET.

SITE TBM

5/8" REBAR WITH CAP
ELEV. = 2122.80

TOPOGRAPHIC SURVEY BY OTHERS.

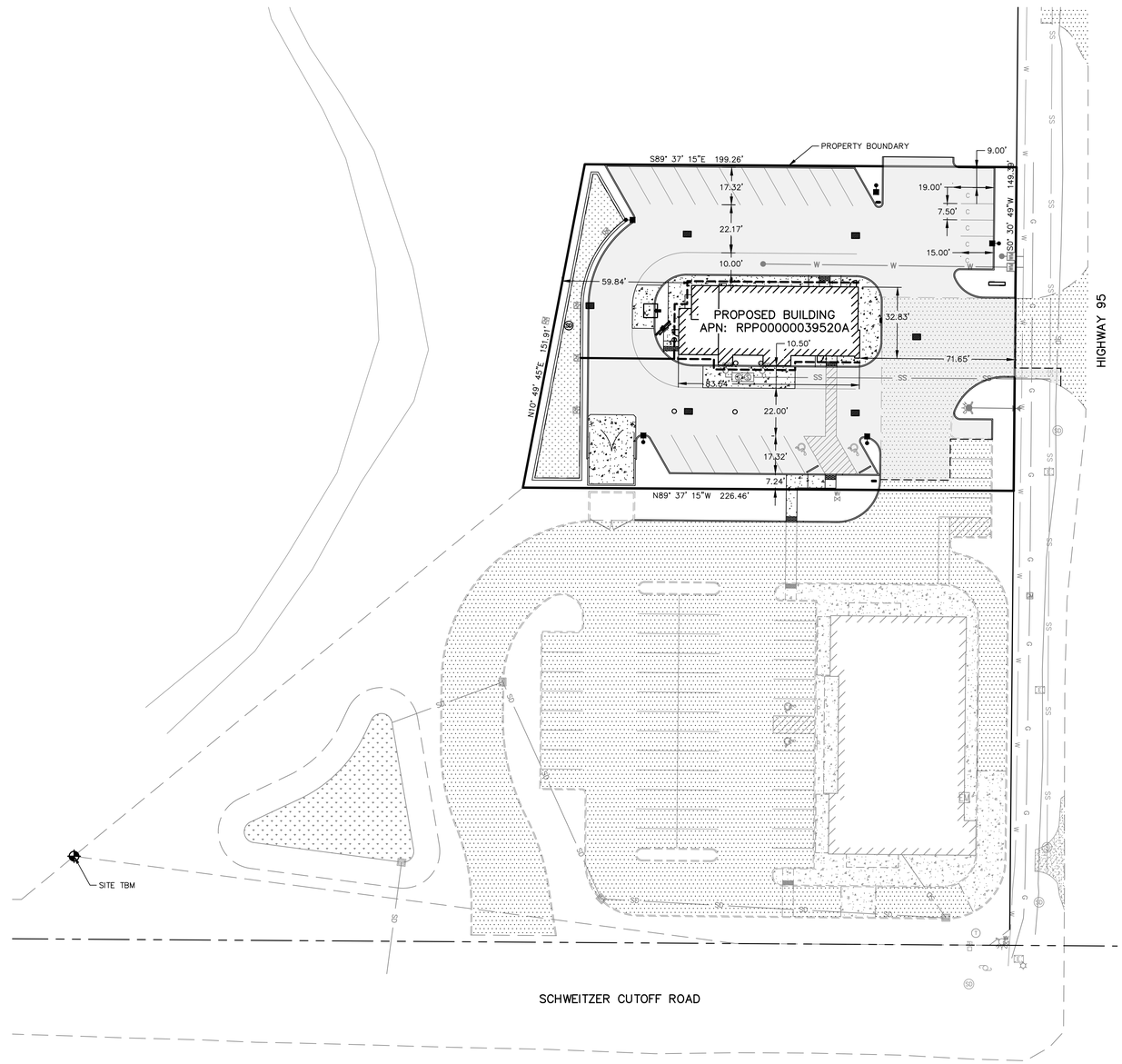

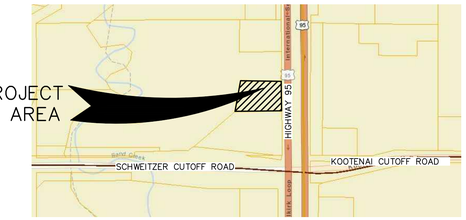

VICINITY MAP

SHEET INDEX

C0 – COVER AND INDEX SHEET
C1 – EROSION AND SEDIMENT CONTROL PLAN
C2 – SITE PLAN
C3 – GRADING PLAN
C4 – DRAINAGE PLAN
C5 – UTILITY PLAN
C6 – DETAIL SHEET
C7 – SWALE DETAIL SHEET
C8 – STANDARDS

SURFACE AREA CALCULATIONS:

LOT AREA:	31,799	SF
OPEN SPACE AREA:	6,826	SF
IMPERVIOUS AREA:	24,973	SF
BUILDING AREA:	2,683	SF

GRAPHIC SCALE

30 0 15 30 60

(IN FEET)
1 inch = 30 ft.

CALL BEFORE YOU DIG 811

No.	DESC. / DATE	BY
5		
4		
3		
2		
1		

storhäug
civil engineering | planning
landscape architecture | surveying
510 east third avenue | spokane, wa | 99202
509.242.1000 | www.storhauginc.com

SHEET TITLE: COVER SHEET

PROJECT TITLE: WENDY'S PONDERAY, IDAHO

SEAL

DATE	09/18/2020
DRAWN	JCS
CHECKED	SPS
PROJECT NUMBER	20–190
DRAWING NO.	CO

COVER

20-190 CO COVER.dwg COVER

DEFINITION:
A TEMPORARY STONE-STABILIZED PAD LOCATED AT POINTS OF VEHICULAR INGRESS AND EGRESS ON A CONSTRUCTION SITE.

PURPOSE:
TO REDUCE THE AMOUNT OF MUD, DIRT, ROCK, ETC. TRANSPORTED ONTO PUBLIC ROADS BY MOTOR VEHICLES OR RUNOFF BY CONSTRUCTING A STABILIZED PAD OF ROCK SPALLS AT ENTRANCES TO CONSTRUCTION SITES AND WASHING OF TIRES DURING EGRESS.

CONDITIONS WHERE PRACTICE APPLIES:
WHEREVER TRAFFIC WILL BE LEAVING A CONSTRUCTION SITE AND MOVING DIRECTLY ONTO A PUBLIC ROAD OR OTHER PAVED AREAS.

MAINTENANCE:
THE ENTRANCE SHALL BE MAINTAINED IN A CONDITION WHICH WILL PREVENT TRACKING OR FLOW OF MUD ONTO PUBLIC RIGHT-OF-WAY. THIS MAY REQUIRE PERIODIC TOP DRESSING WITH 2-INCH STONES, AS CONDITIONS DEMAND, AND REPAIR AND/OR CLEANOUT OF ANY STRUCTURES USED TO TRAP SEDIMENT. ALL MATERIALS SPILLED, DROPPED, WASHED OR TRACKED FROM VEHICLES ONTO ROADWAYS OR INTO STORM DRAINS MUST BE REMOVED.

NOTE:
1. AS REQUIRED 100' MINIMUM, EXCEPT MAY BE REDUCED TO 50' MINIMUM FOR SITES WITH LESS THAN ONE ACRE OF EXPOSED SOIL.

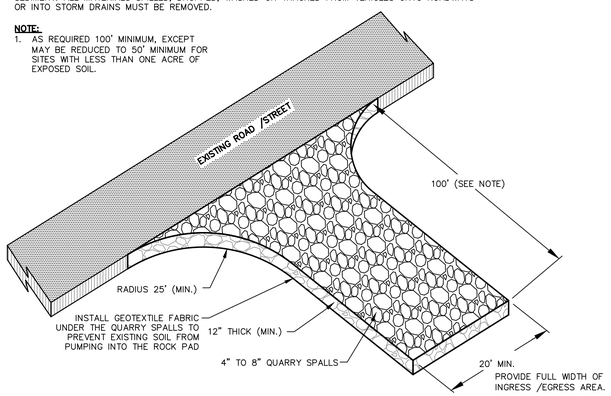

STABILIZED CONSTRUCTION ENTRANCE/ TIRE WASH (CE)
NTS

DEFINITION:
A TEMPORARY SEDIMENT BARRIER CONSISTING OF A FILTER FABRIC STRETCHED ACROSS AND ATTACHED TO SUPPORTING POSTS AND ENTRENCHED. THE FILTER FENCE IS CONSTRUCTED OF STAKES AND SYNTHETIC FILTER FABRIC WITH A RIGID WIRE FENCE BACKING WHERE NECESSARY FOR SUPPORT.

PURPOSE:
1. TO INTERCEPT AND DETAIN SMALL AMOUNTS OF SEDIMENT UNDER SHEET FLOW CONDITIONS FROM DISTURBED AREAS DURING CONSTRUCTION OPERATIONS IN ORDER TO PREVENT SEDIMENT FROM LEAVING THE SITE.
2. TO DECREASE THE VELOCITY OF SHEET FLOWS.

CONDITIONS WHERE PRACTICE APPLIES:
FILTER FENCES MUST BE PROVIDED JUST UPSTREAM OF THE POINT(S) OF DISCHARGE OF RUNOFF FROM A SITE, BEFORE THE FLOW BECOMES CONCENTRATED. THEY MAY ALSO BE REQUIRED:
1. BELOW DISTURBED AREAS WHERE RUNOFF MAY OCCUR IN THE FORM OF SHEET AND RILL EROSION; WHEREVER RUNOFF HAS THE POTENTIAL TO IMPACT DOWNSTREAM RESOURCES.
2. PERPENDICULAR TO MINOR SWALES OR DITCH LINES FROM CONTRIBUTING DRAINAGE AREAS UP TO ONE ACRE IN SIZE.
3. CONTRACTOR SHALL COORDINATE WITH DESIGN ENGINEER FOR ACTUAL PLACEMENT LOCATIONS.

MAINTENANCE:
THE FILTER FENCE AND INLET PROTECTIONS SHALL BE MAINTAINED IN A CONDITION WHICH WILL PREVENT TRACKING OR FLOW OF MUD AND SEDIMENT OFF OF THE CONSTRUCTION SITE. THIS MAY REQUIRE PERIODIC CLEANING WHEN SEDIMENT BUILD UP IS SIX INCHES OR ONE-THIRD OF THE FENCE OR INLET PROTECTION'S ORIGINAL HEIGHT.

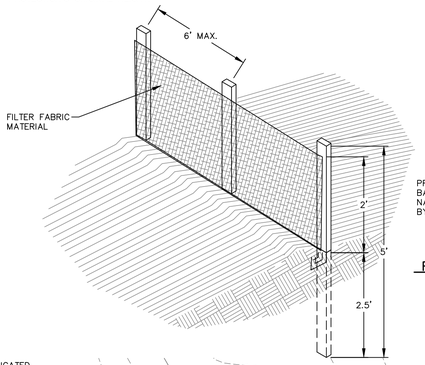

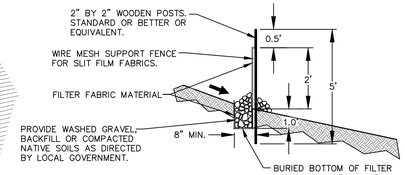

FILTER FENCE (FF)
NTS

STANDARD NOTES:
A. THE FILTER FABRIC FENCE SHALL BE PURCHASED IN A CONTINUOUS ROLL CUT TO THE LENGTH OF THE BARRIER TO AVOID USE OF JOINTS. WHEN JOINTS ARE NECESSARY, OVERLAP FILTER CLOTH AND SECURELY FASTEN BOTH ENDS TO THE POST.
B. POSTS SHALL BE SPACED A MAXIMUM OF 6 FEET APART AND DRIVEN SECURELY INTO THE GROUND A MINIMUM OF 30 INCHES (WHERE PHYSICALLY POSSIBLE).
C. A TRENCH SHALL BE EXCAVATED APPROXIMATELY 8 INCHES WIDE AND 12 INCHES DEEP ALONG THE LINE OF POSTS AND UPSLOPE FROM THE BARRIER. THE TRENCH SHALL BE CONSTRUCTED TO FOLLOW THE CONTOURS.
D. WHEN SLIT FILM FILTER FABRIC IS USED, A WIRE MESH SUPPORT FENCE SHALL BE FASTENED SECURELY TO THE UPSLOPE SIDE OF THE POSTS USING HEAVY-DUTY WIRE STAPLES AT LEAST 1 INCH LONG, TIE WIRES OR HOG RINGS. THE WIRE SHALL EXTEND INTO THE TRENCH A MINIMUM OF 4 INCHES AND SHALL NOT EXTEND MORE THAN 36 INCHES ABOVE THE ORIGINAL GROUND SURFACE.
E. SLIT FILM FILTER FABRIC SHALL BE WIRED TO THE FENCE, AND 20 INCHES OF THE FABRIC SHALL EXTEND INTO THE TRENCH. THE FABRIC SHALL NOT EXTEND MORE THAN 36 INCHES ABOVE THE ORIGINAL GROUND SURFACE. FILTER FABRIC SHALL NOT BE STAPLED TO EXISTING TREES. OTHER TYPES OF FABRIC MAY BE STAPLED TO THE FENCE.
F. WHEN EXTRA-STRENGTH OR MONOFILAMENT FABRIC AND CLOSER POST SPACING ARE USED, THE WIRE MESH SUPPORT FENCE MAY BE ELIMINATED. IN SUCH A CASE, THE FILTER FABRIC IS STAPLED OR WIRED DIRECTLY TO THE POSTS WITH ALL OTHER PROVISIONS OF STANDARD NOTE "E" APPLYING. EXTRA CARE SHOULD BE USED WHEN JOINING OR OVERLAPPING THESE STIFFER FABRICS.
G. LOCAL GOVERNMENTS MAY SPECIFY THE USE OF PROPERLY COMPACTED NATIVE MATERIALS. IN MANY INSTANCES, THIS MAY BE THE PREFERRED ALTERNATIVE BECAUSE THE SOIL FORMS A MORE CONTINUOUS CONTACT WITH THE TRENCH BELOW.

CONTACT PERSON/PROPERTY OWNER/DEVELOPER

JENNIFER ROBSON
503 E 2ND AVE, SUITE B
SPOKANE, WA 99202
(509) 326-6333

PROJECT ADDRESS

PARCEL #: RPP000000039520A
PONDERAY, ID 83852

PROJECT/SITE DESCRIPTION

THE PROPOSED IMPROVEMENTS INCLUDE A PROPOSED RESTAURANT BUILDING WITH PARKING LOT AND ASSOCIATED DRAINAGE AND UTILITY INFRASTRUCTURE IMPROVEMENTS.

SOIL TYPE

THE SOILS IN THIS REGION OF THE SUBJECT PROPERTY HAVE BEEN IDENTIFIED BY THE USDA NATURAL RESOURCES CONSERVATION SERVICE (NRCS) PREDOMINANTLY AS MISSION SILT LOAM.

EXISTING CONDITIONS

THE SITE IS AN UNDEVELOPED LOT COVERED IN BRUSH.

ESC MEASURES

FILTER FENCE SHALL BE USED TO AID IN CONTAINING ANY SEDIMENT ON THE SITE DURING CONSTRUCTION. STABILIZED CONSTRUCTION ENTRANCES SHALL BE USED AT POINTS OF INGRESS AND EGRESS FOR CONSTRUCTION VEHICLES. INLET PROTECTION SHALL BE USED AT ALL STORMWATER INLETS.

REFER TO PLAN VIEW ON THIS SHEET FOR APPROXIMATE LOCATION OF THE ABOVE ITEMS.

EROSION CONTROL MEASURES IN ADDITION TO THOSE INDICATED AS PART OF THIS PLAN MAY BE REQUIRED IF THE CITY ENGINEER DETERMINES INDICATED MEASURES ARE INADEQUATE. PERIODIC MAINTENANCE OF EROSION CONTROL MEASURES IS REQUIRED UNTIL PERMANENT DRAINAGE FACILITIES ARE OPERATIONAL AND SUFFICIENT VEGETATION IS ESTABLISHED. TEMPORARY SEDIMENT CONTROL BMPs SHALL BE REMOVED WITHIN 30 DAYS OF THE DATE WHEN PERMANENT FACILITIES ARE ACCEPTED BY THE CITY OF PONDERAY.

IF ERODIBLE MATERIAL IS TO BE STOCKPILED ON/NEAR THE SITE, FILTER FABRIC SHALL BE INSTALLED COMPLETELY SURROUNDING THE STOCKPILE SO THERE IS NO IMPACT ON ADJACENT PROPERTY.

ALL DISTRUBED AREAS SHALL BE HYDROSEEDED PER THE SEEDING SPECIFICATIONS. PROVIDE FRESH, CLEAN NEW CROP SEED COMPLYING WITH TOLERANCE FOR PURITY AND GERMINATION ESTABLISHED BY OFFICIAL SEED ANALYSTS OF NORTH AMERICA. PROVIDE SEED MIXTURE COMPOSED OF GRASS SPECIES AND PERCENTAGES AS FOLLOWS:

20 PERCENT ELKA PERENNIAL RYE
20 PERCENT DURAR HARD FESCUE
45 PERCENT COVAR SHEEP/FESCUE
15 PERCENT REUBENS CANADIAN BLUEGRASS

PROVIDE MIXTURE COMPOSED OF GRASS SEED AND FERTILIZER IN PERCENTAGES AS FOLLOWS:

GRASS SEED MIXTURE: 90 LB.S PER ACRE
FERTILIZER: 16:16:16 TIMED RELEASE COMPOSITION, 300 LBS. PER ACRE

ALL SEEDING OF SLOPES SHALL BE DONE IN ACCORDANCE WITH WSDOT STANDARD SPECIFICATIONS. CONTRACTOR SHALL IRRIGATE SEEDED AREAS UNTIL SEED HAS GERMINATED AND HAS BEEN ACCEPTED BY THE LOCAL JURISDICTION.

SEEDING SPECIFICATIONS

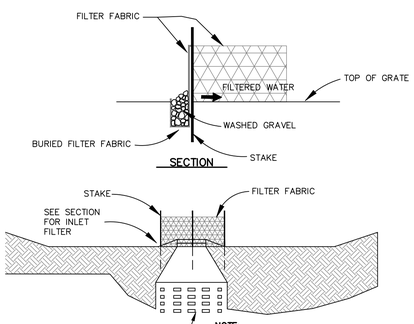

NOTE:
1. ALL DRYWELLS, INLETS, CATCH BASIN AND ANY OTHER STORMDRAIN FIXTURES WITH GRATED INLETS SHALL BE PROTECTED.
2. PROTECTION SHALL REMAIN IN PLACE UNTIL VEGETATION IS ESTABLISHED.
3. SEDIMENT MUST BE REMOVED WHEN IT REACHES 6" OR ½ OF THE HEIGHT OF THE FENCE.

TEMPORARY INLET PROTECTION (IP)
NTS

DEFINITION: A TEMPORARY PREFABRICATED CONCRETE WASHOUT CONTAINER OR SELF-INSTALLED STRUCTURE (ABOVE OR BELOW GRADE), APPROVED BY THE ENGINEER, USED TO DETAIN CONCRETE WASTE.

PURPOSE: TO PREVENT OR REDUCE THE DISCHARGE OF POLLUTANTS TO STORMWATER FROM CONCRETE WASTE BY CONDUCTING WASHOUT OFFSITE OR PERFORMING ONSITE WASHOUT IN A DESIGNATED AREA TO PREVENT POLLUTANTS FROM ENTERING SURFACE WATERS OR GROUNDWATER.

CONDITIONS WHERE PRACTICE APPLIES:
WHENEVER CONCRETE IS USED AS A CONSTRUCTION MATERIAL AND IT IS NOT POSSIBLE TO DISPOSE OF ALL CONCRETE WASTEWATER AND WASHOUT OFFSITE.

MAINTENANCE: THE CONCRETE WASHOUT FACILITY SHALL BE INSPECTED FOR CAPACITY AND LEAKAGE PRIOR TO THE COMMENCEMENT OF CONCRETE WORK AND DAILY THEREAFTER. WASHOUT FACILITIES MUST BE CLEANED, OR NEW FACILITIES PROVIDED AND READY FOR USE ONCE THE WASHOUT BECOMES 75% FULL.

NOTES:
1. CONCRETE TRUCK CHUTES, PUMPS, AND INTERNALS SHALL BE WASHED OUT ONLY INTO FORMED AREAS AWAITING INSTALLATION OF CONCRETE OR ASPHALT.
2. UN-USED CONCRETE REMAINING IN THE TRUCK AND PUMP SHALL BE RETURNED TO THE ORIGINATING BATCH PLANT FOR RECYCLING.
3. HAND TOOLS INCLUDING, BUT NOT LIMITED TO, SCREEDS, SHOVELS, RAKES, FLOATS, AND TROWELS SHALL BE WASHED OFF ONLY INTO FORMED AREAS AWAITING INSTALLATION OF CONCRETE OR ASPHALT.
4. EQUIPMENT THAT CANNOT BE EASILY MOVED, SUCH AS CONCRETE PAVERS, SHALL ONLY BE WASHED IN AREAS THAT NO NOT DIRECTLY DRAIN TO NATURAL OR CONSTRUCTED STORMWATER CONVEYANCES.
5. WHEN NO FORMED AREAS ARE AVAILABLE, WASHWATER AND LEFTOVER PRODUCT SHALL BE CONTAINED IN A LINED CONTAINER. CONTAINED CONCRETE SHALL BE DISPOSED OF IN A MANNER THAT DOES NOT VIOLATE GROUNDWATER OR SURFACE WATER QUALITY STANDARDS.

CONCRETE WASHOUT AREA (CW)

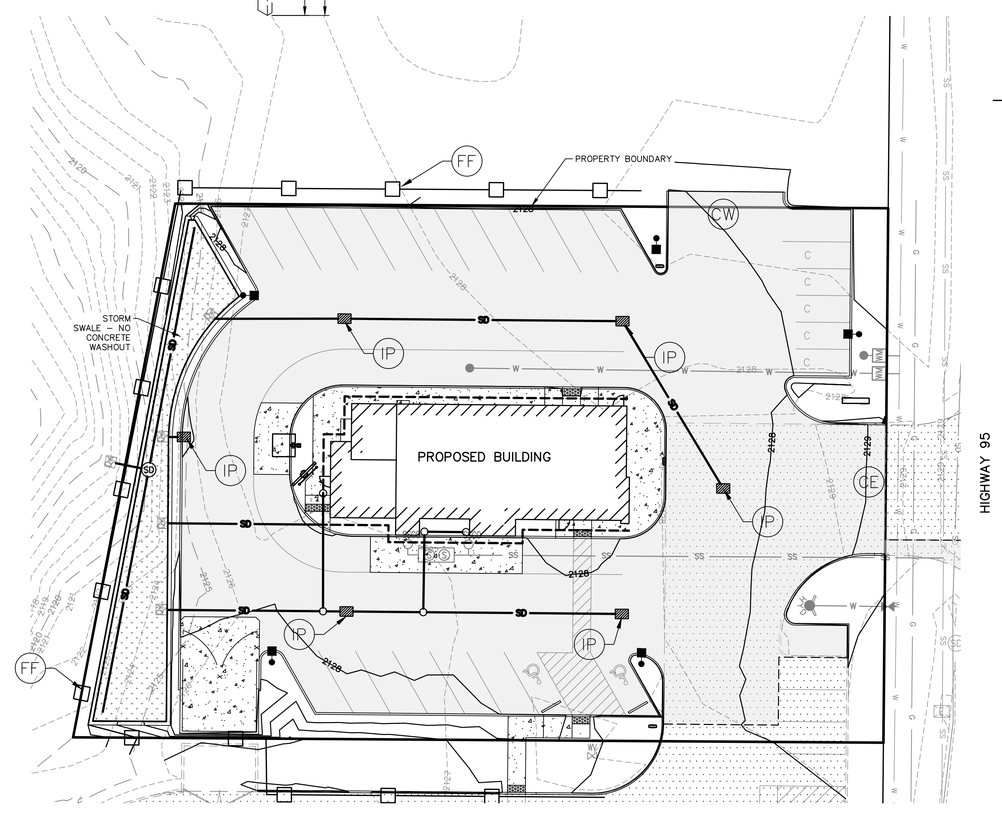

SITE TBM
5/8" REBAR WITH CAP
ELEV. = 2122.80
SEE C0 FOR MORE INFORMATION.

TOPOGRAPHIC SURVEY BY OTHERS.

GRAPHIC SCALE
20 0 10 20 40
(IN FEET)
1 inch = 20 ft.

NOTE: REFER TO COVER AND INDEX SHEET FOR VICINITY MAP.

CALL BEFORE YOU DIG 811

No.	DESC. / DATE	BY
5		
4		
3		
2		
1		

storhäug
civil engineering | planning
landscape architecture | surveying
510 east third avenue | spokane, wa | 99202
509.242.1000 | www.storhauginc.com

SHEET TITLE: EROSION & SEDIMENT CONTROL PLAN

PROJECT TITLE: WENDY'S PONDERAY, IDAHO

SEAL: PROFESSIONAL ENGINEER LICENSE 7242 STATE OF IDAHO STEVEN P. SOLTYS 9/15/20

DATE	09/18/2020
DRAWN	JCS
CHECKED	SPS
PROJECT NUMBER	20-190
DRAWING NO.	C1
	ESC

20-190 C1 ESC.dwg ESC

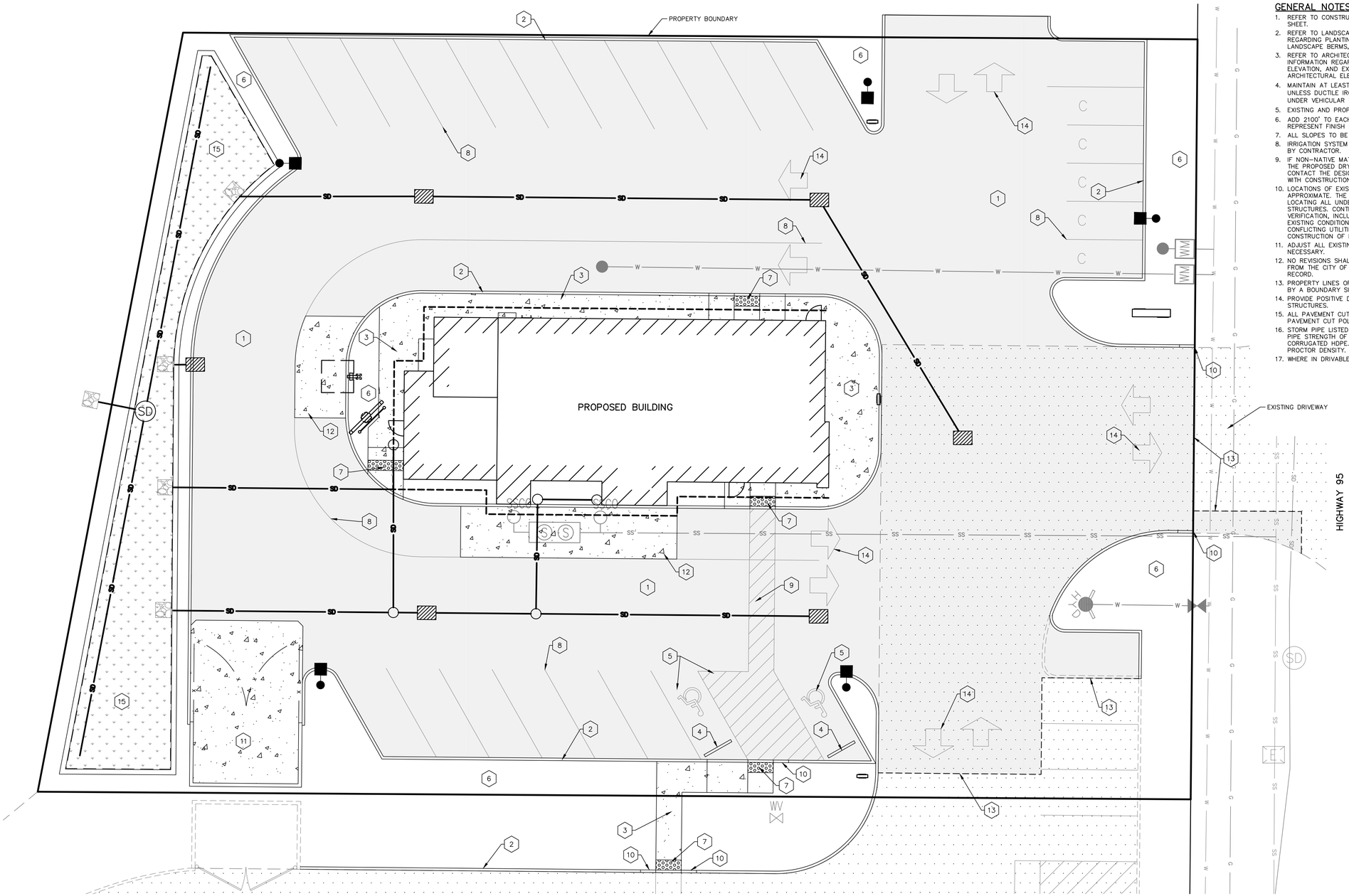

GENERAL NOTES

1. REFER TO CONSTRUCTION NOTES AND DETAILS SHOWN ON DETAIL SHEET.
2. REFER TO LANDSCAPE DOCUMENTS FOR ADDITIONAL INFORMATION REGARDING PLANTINGS, IRRIGATION SYSTEM, SITE FURNITURE, LANDSCAPE BERMS, STEPS, AND LANDSCAPE WALLS.
3. REFER TO ARCHITECTURAL DOCUMENTS FOR ADDITIONAL INFORMATION REGARDING ANY STEPS IN FINISH FLOOR, BASEMENT ELEVATION, AND EXTERIOR DOOR LOCATIONS. COORDINATE ARCHITECTURAL ELEVATIONS WITH SITE GRADING.
4. MAINTAIN AT LEAST 2' OF COVER OVER STORM DRAIN PIPES, UNLESS DUCTILE IRON THEN MAINTAIN AT LEAST 1' OF COVER. IF UNDER VEHICULAR TRAFFIC, MAINTAIN 3' OF COVER.
5. EXISTING AND PROPOSED CONTOURS ARE SHOWN AT 1' INTERVALS.
6. ADD 2100' TO EACH SPOT ELEVATION. SPOT ELEVATIONS REPRESENT FINISH SURFACE GRADES.
7. ALL SLOPES TO BE 3:1 MAX UNLESS OTHERWISE INDICATED.
8. IRRIGATION SYSTEM FOR SWALES AND DITCHES SHALL BE PROVIDED BY CONTRACTOR.
9. IF NON-NATIVE MATERIAL IS ENCOUNTERED AT THE LOCATION OF THE PROPOSED DRYWELLS OR SWALES, THE CONTRACTOR SHALL CONTACT THE DESIGN ENGINEER PRIOR TO PROCEEDING FURTHER WITH CONSTRUCTION.
10. LOCATIONS OF EXISTING UTILITIES SHOWN ON THE PLANS ARE APPROXIMATE. THE CONTRACTOR SHALL BE RESPONSIBLE FOR LOCATING ALL UNDERGROUND AND OVERHEAD UTILITIES AND STRUCTURES. CONTRACTOR TO PERFORM NECESSARY FIELD VERIFICATION, INCLUDING SUBSURFACE EXPLORATION, FOR ALL EXISTING CONDITIONS TO BE INCLUDED IN CONTRACTOR BID. ANY CONFLICTING UTILITIES SHALL BE RELOCATED PRIOR TO CONSTRUCTION OF PROPOSED IMPROVEMENTS.
11. ADJUST ALL EXISTING UTILITY COVERS TO FINISHED GRADE AS NECESSARY.
12. NO REVISIONS SHALL BE MADE TO THE PLANS WITHOUT APPROVAL FROM THE CITY OF PONDERAY AND THE DESIGN ENGINEER OF RECORD.
13. PROPERTY LINES OF SUBJECT PROPERTY HAVE NOT BEEN VERIFIED BY A BOUNDARY SURVEY.
14. PROVIDE POSITIVE DRAINAGE AWAY FROM BUILDINGS AND STRUCTURES.
15. ALL PAVEMENT CUTS MUST CONFORM TO THE INLAND REGIONAL PAVEMENT CUT POLICY.
16. STORM PIPE LISTED AS PVC IS TO BE PVC SDR-35. PVC MINIMUM PIPE STRENGTH OF 46 PSI. PIPE LISTED AS CPEP IS TO ADS N-12 CORRUGATED HDPE. TRENCH TO BE COMPACTED TO 95% MODIFIED PROCTOR DENSITY.
17. WHERE IN DRIVABLE SURFACES, CLEANOUTS TO BE TRAFFIC RATED.

TABLE

1. ASPHALT PAVING. SEE TYPICAL ASPHALT PAVEMENT SECTION ON C6 FOR MORE INFORMATION.
2. 6" VERTICAL CONCRETE CURB PER ISPWC STANDARD DRAWING NO. SD-701A ON C8.
3. CONCRETE SIDEWALK PER ISPWC STANDARD DRAWING NO. SD-709 ON C8.
4. 6" CONCRETE PARKING BUMPER.
5. ADA VAN ACCESSIBLE PARKING STALL, SIGNAGE, AND STRIPING. SEE ADA PARKING DETAIL ON C6.
6. PROPOSED LANDSCAPING. SEE LANDSCAPING PLANS FOR MORE INFORMATION.
7. DETECTABLE WARNING FOR PEDESTRIAN ACCESS PER ISPWC STANDARD DRAWING NO. SD-712 ON C8.
8. 4" WIDE SOLID WHITE STRIPE PER MUTCD STANDARDS.
9. STRIPED PEDESTRIAN PATH PER MUTCD STANDARDS.
10. CURB NOSEDOWN. SEE CURB NOSEDOWN DETAIL ON C6 FOR MORE INFORMATION.
11. SCREENED TRASH ENCLOSURE. SEE REINFORCED CONCRETE PAVEMENT SECTION ON C6 FOR MORE INFORMATION. SEE ARCHITECTURAL PLANS FOR ADDITIONAL INFORMATION.
12. CONCRETE PAVEMENT. SEE REINFORCED CONCRETE PAVEMENT SECTION ON C6 FOR MORE INFORMATION.
13. SAWCUT, REMOVE, AND REPLACE EXISTING ASPHALT FOR SITE IMPROVEMENTS PER INLAND NORTHWEST PAVEMENT CUT POLICY. TACK COAT PRIOR TO PAVING. MATCH EXISTING GRADE.
14. DIRECTIONAL ARROWS SHOWN FOR SCHEMATIC PURPOSES ONLY.
15. SEE SWALE DETAILS ON C7 FOR MORE INFORMATION.

SITE TBM

5/8" REBAR WITH CAP
ELEV. = 2122.80
SEE C0 FOR MORE INFORMATION.

TOPOGRAPHIC SURVEY BY OTHERS.

GRAPHIC SCALE

10 0 5 10 20

(IN FEET)
1 inch = 10 ft.

NOTE: REFER TO COVER AND INDEX SHEET FOR VICINITY MAP.

CALL BEFORE YOU DIG 811

20-190 C2 SITE.dwg SITE

No.	DESC. / DATE	BY
5		
4		
3		
2		
1		

storhäug
civil engineering | planning
landscape architecture | surveying
510 east third avenue | spokane, wa | 99202
509.242.1000 | www.storhauginc.com

SHEET TITLE: SITE PLAN

PROJECT TITLE: WENDY'S PONDERAY, IDAHO

SEAL

PROFESSIONAL ENGINEER LICENSED 7242 9/15/20 STATE OF IDAHO STEVEN P. SOLTYS

DATE	09/18/2020
DRAWN	JCS
CHECKED	SPS
PROJECT NUMBER	20-190
DRAWING NO.	C2

SITE

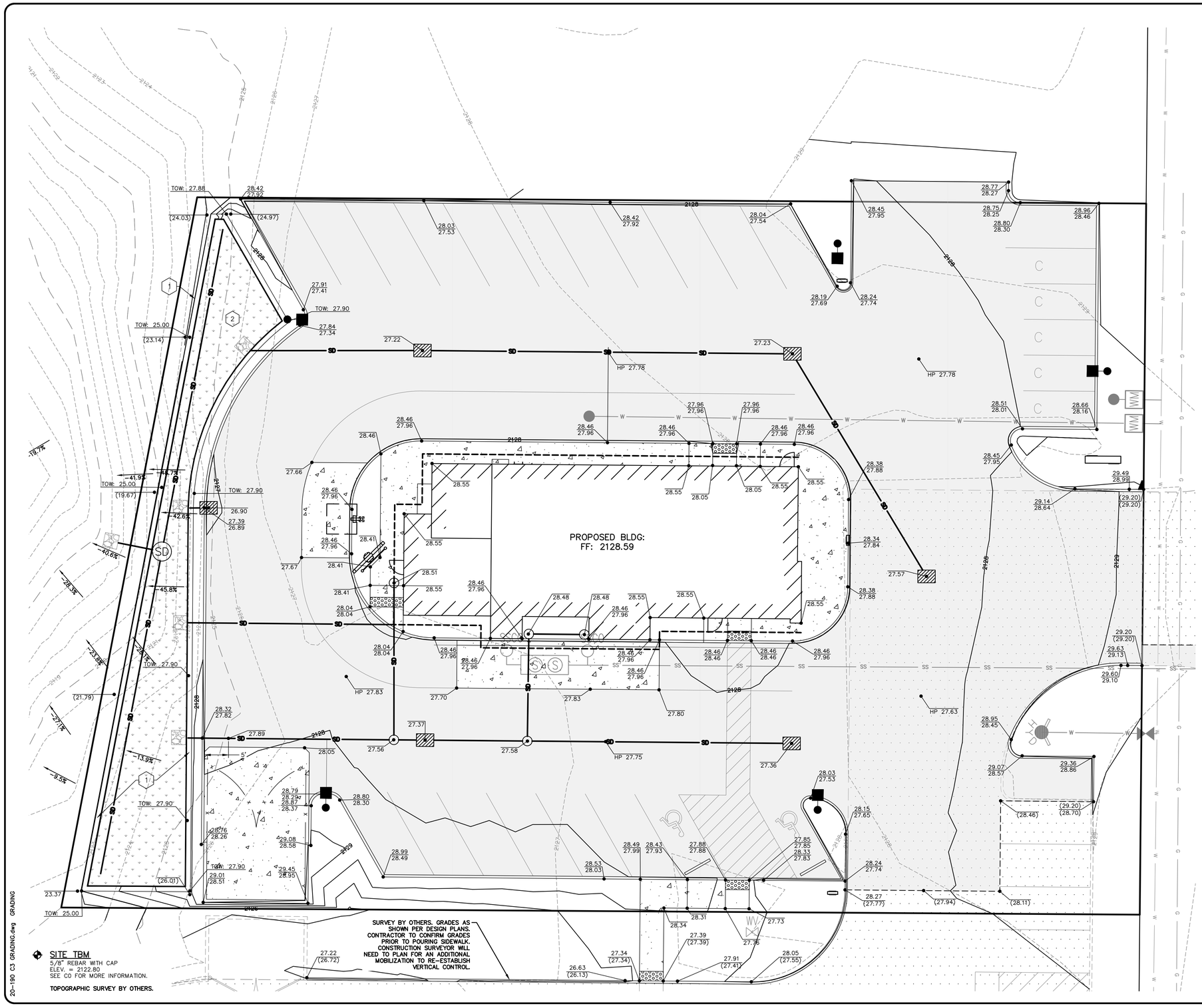

SITE TBM

5/8" REBAR WITH CAP
ELEV. = 2122.80
SEE C0 FOR MORE INFORMATION.

TOPOGRAPHIC SURVEY BY OTHERS.

GENERAL NOTES

1. REFER TO CONSTRUCTION NOTES AND DETAILS SHOWN ON DETAIL SHEET.
2. REFER TO LANDSCAPE DOCUMENTS FOR ADDITIONAL INFORMATION REGARDING PLANTINGS, IRRIGATION SYSTEM, SITE FURNITURE, LANDSCAPE BERMS, STEPS, AND LANDSCAPE WALLS.
3. REFER TO ARCHITECTURAL DOCUMENTS FOR ADDITIONAL INFORMATION REGARDING ANY STEPS IN FINISH FLOOR, BASEMENT ELEVATION, AND EXTERIOR DOOR LOCATIONS. COORDINATE ARCHITECTURAL ELEVATIONS WITH SITE GRADING.
4. MAINTAIN AT LEAST 2' OF COVER OVER STORM DRAIN PIPES, UNLESS DUCTILE IRON THEN MAINTAIN AT LEAST 1' OF COVER. IF UNDER VEHICULAR TRAFFIC, MAINTAIN 3' OF COVER.
5. EXISTING AND PROPOSED CONTOURS ARE SHOWN AT 1' INTERVALS.
6. ADD 2100' TO EACH SPOT ELEVATION. SPOT ELEVATIONS REPRESENT FINISH SURFACE GRADES.
7. ALL SLOPES TO BE 3:1 MAX UNLESS OTHERWISE INDICATED.
8. IRRIGATION SYSTEM FOR SWALES AND DITCHES SHALL BE PROVIDED BY CONTRACTOR.
9. IF NON-NATIVE MATERIAL IS ENCOUNTERED AT THE LOCATION OF THE PROPOSED DRYWELLS OR SWALES, THE CONTRACTOR SHALL CONTACT THE DESIGN ENGINEER PRIOR TO PROCEEDING FURTHER WITH CONSTRUCTION.
10. LOCATIONS OF EXISTING UTILITIES SHOWN ON THE PLANS ARE APPROXIMATE. THE CONTRACTOR SHALL BE RESPONSIBLE FOR LOCATING ALL UNDERGROUND AND OVERHEAD UTILITIES AND STRUCTURES. CONTRACTOR TO PERFORM NECESSARY FIELD VERIFICATION, INCLUDING SUBSURFACE EXPLORATION, FOR ALL EXISTING CONDITIONS TO BE INCLUDED IN CONTRACTOR BID. ANY CONFLICTING UTILITIES SHALL BE RELOCATED PRIOR TO CONSTRUCTION OF PROPOSED IMPROVEMENTS.
11. ADJUST ALL EXISTING UTILITY COVERS TO FINISHED GRADE AS NECESSARY.
12. NO REVISIONS SHALL BE MADE TO THE PLANS WITHOUT APPROVAL FROM THE CITY OF PONDERAY AND THE DESIGN ENGINEER OF RECORD.
13. PROPERTY LINES OF SUBJECT PROPERTY HAVE NOT BEEN VERIFIED BY A BOUNDARY SURVEY.
14. PROVIDE POSITIVE DRAINAGE AWAY FROM BUILDINGS AND STRUCTURES.
15. ALL PAVEMENT CUTS MUST CONFORM TO THE INLAND REGIONAL PAVEMENT CUT POLICY.
16. STORM PIPE LISTED AS PVC IS TO BE PVC SDR-35. PVC MINIMUM PIPE STRENGTH OF 46 PSI. PIPE LISTED AS CPEP IS TO ADS N-12 CORRUGATED HDPE. TRENCH TO BE COMPACTED TO 95% MODIFIED PROCTOR DENSITY.
17. WHERE IN DRIVABLE SURFACES, CLEANOUTS TO BE TRAFFIC RATED.

TABLE

1. RETAINING WALL BY OTHERS. COORDINATE WITH STRUCTURAL ENGINEER FOR WALL DESIGN.
2. SEE SWALE DETAILS ON C7 FOR SWALE DETAIL AND FULL GRADE OUT.

GRAPHIC SCALE

10 0 5 10 20

(IN FEET)
1 inch = 10 ft.

NOTE: REFER TO COVER AND INDEX SHEET FOR VICINITY MAP.

CALL BEFORE YOU DIG 811

No.	DESC. / DATE	BY
5		
4		
3		
2		
1		

storhaug
civil engineering | planning
landscape architecture | surveying
510 east third avenue | spokane, wa | 99202
509.242.1000 | www.storhauginc.com

SHEET TITLE: GRADING PLAN

PROJECT TITLE: WENDY'S PONDERAY, IDAHO

SEAL

PROFESSIONAL ENGINEER LICENSED 12242 9/18/20 STATE OF IDAHO STEVEN P. SOLTYS

DATE	09/18/2020
DRAWN	JCS
CHECKED	SPS
PROJECT NUMBER	20-190
DRAWING NO.	C3
	GRADING

20-190 C3 GRADING.dwg GRADING

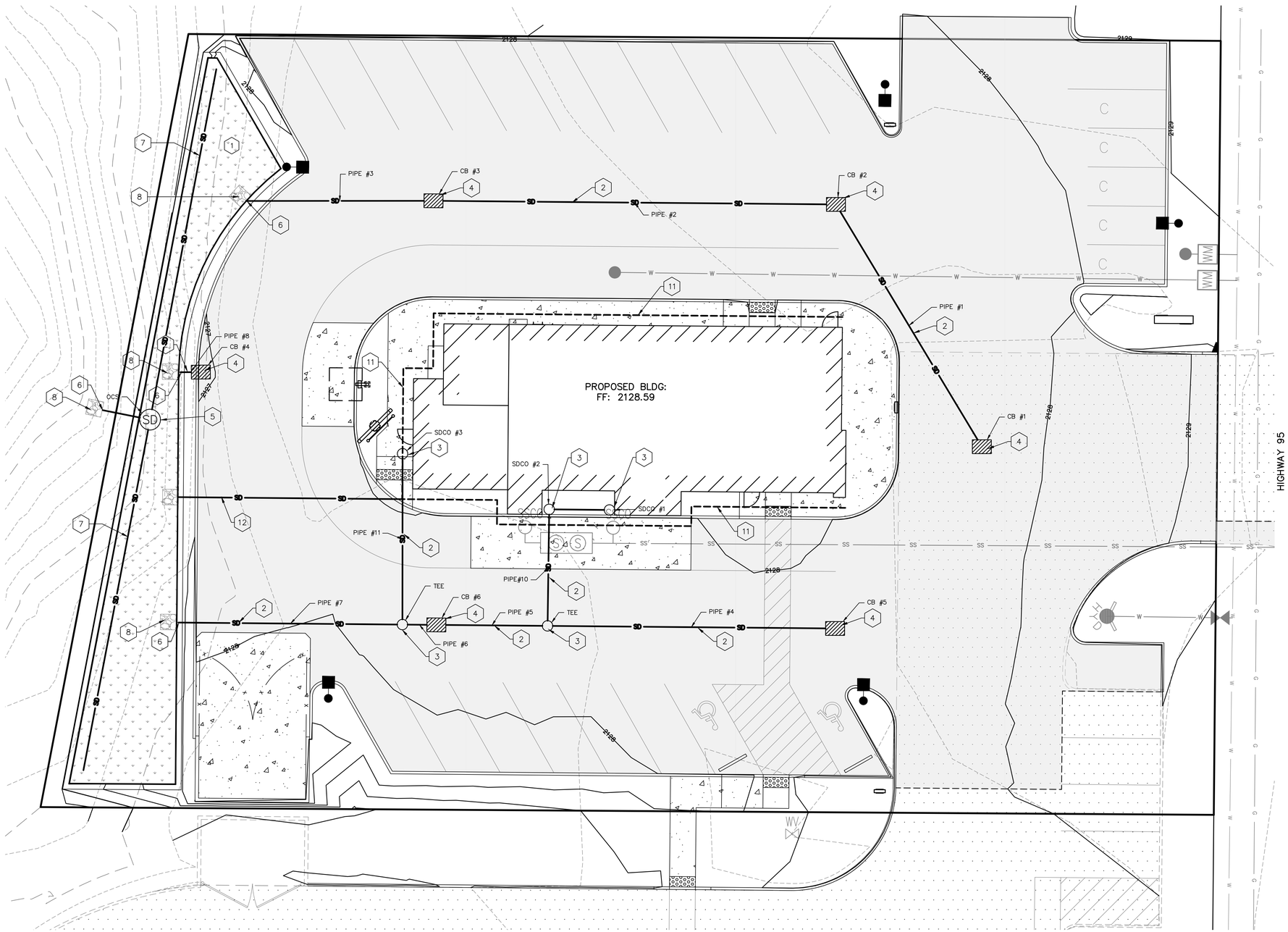

GENERAL NOTES

1. REFER TO CONSTRUCTION NOTES AND DETAILS SHOWN ON DETAIL SHEET.
2. REFER TO LANDSCAPE DOCUMENTS FOR ADDITIONAL INFORMATION REGARDING PLANTINGS, IRRIGATION SYSTEM, SITE FURNITURE, LANDSCAPE BERMS, STEPS, AND LANDSCAPE WALLS.
3. REFER TO ARCHITECTURAL DOCUMENTS FOR ADDITIONAL INFORMATION REGARDING ANY STEPS IN FINISH FLOOR, BASEMENT ELEVATION, AND EXTERIOR DOOR LOCATIONS. COORDINATE ARCHITECTURAL ELEVATIONS WITH SITE GRADING.
4. MAINTAIN AT LEAST 2' OF COVER OVER STORM DRAIN PIPES, UNLESS DUCTILE IRON THEN MAINTAIN AT LEAST 1' OF COVER. IF UNDER VEHICULAR TRAFFIC, MAINTAIN 3' OF COVER.
5. EXISTING AND PROPOSED CONTOURS ARE SHOWN AT 1' INTERVALS.
6. ADD 2100' TO EACH SPOT ELEVATION. SPOT ELEVATIONS REPRESENT FINISH SURFACE GRADES.
7. ALL SLOPES TO BE 3:1 MAX UNLESS OTHERWISE INDICATED.
8. IRRIGATION SYSTEM FOR SWALES AND DITCHES SHALL BE PROVIDED BY CONTRACTOR.
9. IF NON-NATIVE MATERIAL IS ENCOUNTERED AT THE LOCATION OF THE PROPOSED DRYWELLS OR SWALES, THE CONTRACTOR SHALL CONTACT THE DESIGN ENGINEER PRIOR TO PROCEEDING FURTHER WITH CONSTRUCTION.
10. LOCATIONS OF EXISTING UTILITIES SHOWN ON THE PLANS ARE APPROXIMATE. THE CONTRACTOR SHALL BE RESPONSIBLE FOR LOCATING ALL UNDERGROUND AND OVERHEAD UTILITIES AND STRUCTURES. CONTRACTOR TO PERFORM NECESSARY FIELD VERIFICATION, INCLUDING SUBSURFACE EXPLORATION, FOR ALL EXISTING CONDITIONS TO BE INCLUDED IN CONTRACTOR BID. ANY CONFLICTING UTILITIES SHALL BE RELOCATED PRIOR TO CONSTRUCTION OF PROPOSED IMPROVEMENTS.
11. ADJUST ALL EXISTING UTILITY COVERS TO FINISHED GRADE AS NECESSARY.
12. NO REVISIONS SHALL BE MADE TO THE PLANS WITHOUT APPROVAL FROM THE CITY OF PONDERAY AND THE DESIGN ENGINEER OF RECORD.
13. PROPERTY LINES OF SUBJECT PROPERTY HAVE NOT BEEN VERIFIED BY A BOUNDARY SURVEY.
14. PROVIDE POSITIVE DRAINAGE AWAY FROM BUILDINGS AND STRUCTURES.
15. ALL PAVEMENT CUTS MUST CONFORM TO THE INLAND REGIONAL PAVEMENT CUT POLICY.
16. STORM PIPE LISTED AS PVC IS TO BE PVC SDR-35. PVC MINIMUM PIPE STRENGTH OF 46 PSI. PIPE LISTED AS CPEP IS TO ADS N-12 CORRUGATED HDPE. TRENCH TO BE COMPACTED TO 95% MODIFIED PROCTOR DENSITY.
17. WHERE IN DRIVABLE SURFACES, CLEANOUTS TO BE TRAFFIC RATED.

STORM STRUCTURE TABLE

STRUCTURE	ELEVATIONS
CB #1	RIM.= 2127.57 IE.= 2123.91 (NW)
CB #2	RIM.= 2127.23 IE.= 2123.64 (W) IE.= 2123.64 (SE)
CB #3	RIM.= 2127.22 IE.= 2122.86 (E) IE.= 2122.76 (W)
CB #4	RIM.= 2126.90 IE.= 2122.50 (W)
CB #5	RIM.= 2127.36 IE.= 2123.70 (W)
CB #6	RIM.= 2127.37 IE.= 2122.94 (E) IE.= 2122.84 (W)
OCS	RIM.= 2124.00 IE.= 2121.00 (S) IE.= 2121.00 (N) IE.= 2120.00 (W)
SDCO #1	RIM.= 2128.48 IE.= 2124.94 (W)
SDCO #2	RIM.= 2128.48 IE.= 2124.88 (E) IE.= 2124.78 (S)
SDCO #3	RIM.= 2128.51 IE.= 2124.97 (S)

STORM PIPE TABLE

NAME	DETAILS
PIPE #9	6" PVC L.= 11.6 S.= 0.0050 FT/FT
PIPE #1	8" CPEP L.= 54.6 S.= 0.0049 FT/FT
PIPE #2	8" CPEP L.= 77.7 S.= 0.0100 FT/FT
PIPE #3	8" CPEP L.= 36.2 S.= 0.0100 FT/FT
PIPE #4	8" CPEP L.= 55.5 S.= 0.0100 FT/FT
PIPE #5	8" CPEP L.= 21.5 S.= 0.0100 FT/FT
PIPE #6	8" CPEP L.= 6.6 S.= 0.0100 FT/FT
PIPE #7	8" CPEP L.= 43.2 S.= 0.0100 FT/FT
PIPE #8	8" CPEP L.= 4.0 S.= 0.0200 FT/FT
PIPE #11	6" PVC L.= 33.0 S.= 0.0517 FT/FT
PIPE#10	6" PVC L.= 22.5 S.= 0.0504 FT/FT

TABLE

1. SWALE "A"
   BOTTOM AREA = 1,585 SF
   BOTTOM ELEVATION = 2122.0 SEE SWALE DETAILS ON C7 FOR MORE INFORMATION.
2. STORM DRAIN PIPE. SEE STORM PIPE TABLE FOR MORE INFORMATION.
3. TRAFFIC RATED CLEANOUT. SEE STORM STRUCTURE TABLE FOR MORE INFORMATION.
4. CATCH BASIN PER CITY OF COEUR D'ALENE STANDARD DRAWING NO. SD-1 ON SHEET C8. SEE STORM STRUCTURE TABLE FOR MORE INFORMATION.
5. OUTLET CONTROL STRUCTURE TO BE STANDARD CONCRETE MANHOLE WITH GRATED LID PER ISPWC STANDARD DRAWING NO. SD-611 ON C8. SEE STORM STRUCTURE TABLE FOR MORE INFORMATION. 4" PIPE TO BE INSTALLED IN SIDE OF MANHOLE 0.5' ABOVE SWALE BOTTOM. SEE SWALE DETAILS ON C7 FOR MORE INFORMATION.
6. OUTLET PIPE. INVERT TO TIE INTO EXISTING GRADES AS NEEDED.
7. 4" PERFORATED PIPE UNDERDRAIN. SEE SWALE DETAILS ON C7 FOR MORE INFORMATION.
8. RIP RAP. SEE RIP RAP DETAIL AND SWALE DETAILS ON C7 FOR MORE INFORMATION.
9. NOT USED
10. NOT USED
11. FOUNDATION DRAIN. COORDINATE WITH ARCHITECTURAL AND STRUCTURAL PLANS.
12. 4" HDPE PIPE TO CONNECT TO FOUNDATION DRAIN. INSTALL 3'X3' RIP RAP IN SWALE.
    LENGTH = 43.2'
    I.E. (AT BUILDING) = 2123.50
    I.E. (SWALE) = 2122.50

SITE TBM
5/8" REBAR WITH CAP
ELEV. = 2122.80
SEE C0 FOR MORE INFORMATION.

TOPOGRAPHIC SURVEY BY OTHERS.

GRAPHIC SCALE
10 0 5 10 20
(IN FEET)
1 inch = 10 ft.

NOTE: REFER TO COVER AND INDEX SHEET FOR VICINITY MAP.

CALL BEFORE YOU DIG 811

No.	DESC. / DATE	BY
5		
4		
3		
2		
1		

storhäug
civil engineering | planning
landscape architecture | surveying
510 east third avenue | spokane, wa | 99202
509.242.1000 | www.storhaugINC.com

SHEET TITLE: DRAINAGE PLAN

PROJECT TITLE: WENDY'S
PONDERAY, IDAHO

SEAL: PROFESSIONAL ENGINEER LICENSED 7242 9/18/20 STATE OF IDAHO STEVEN P. SOLTYS

DATE	09/18/2020
DRAWN	JCS
CHECKED	SPS
PROJECT NUMBER	20-190
DRAWING NO.	C4

DRAINAGE

20-190 C4 DRAINAGE.dwg DRAINAGE

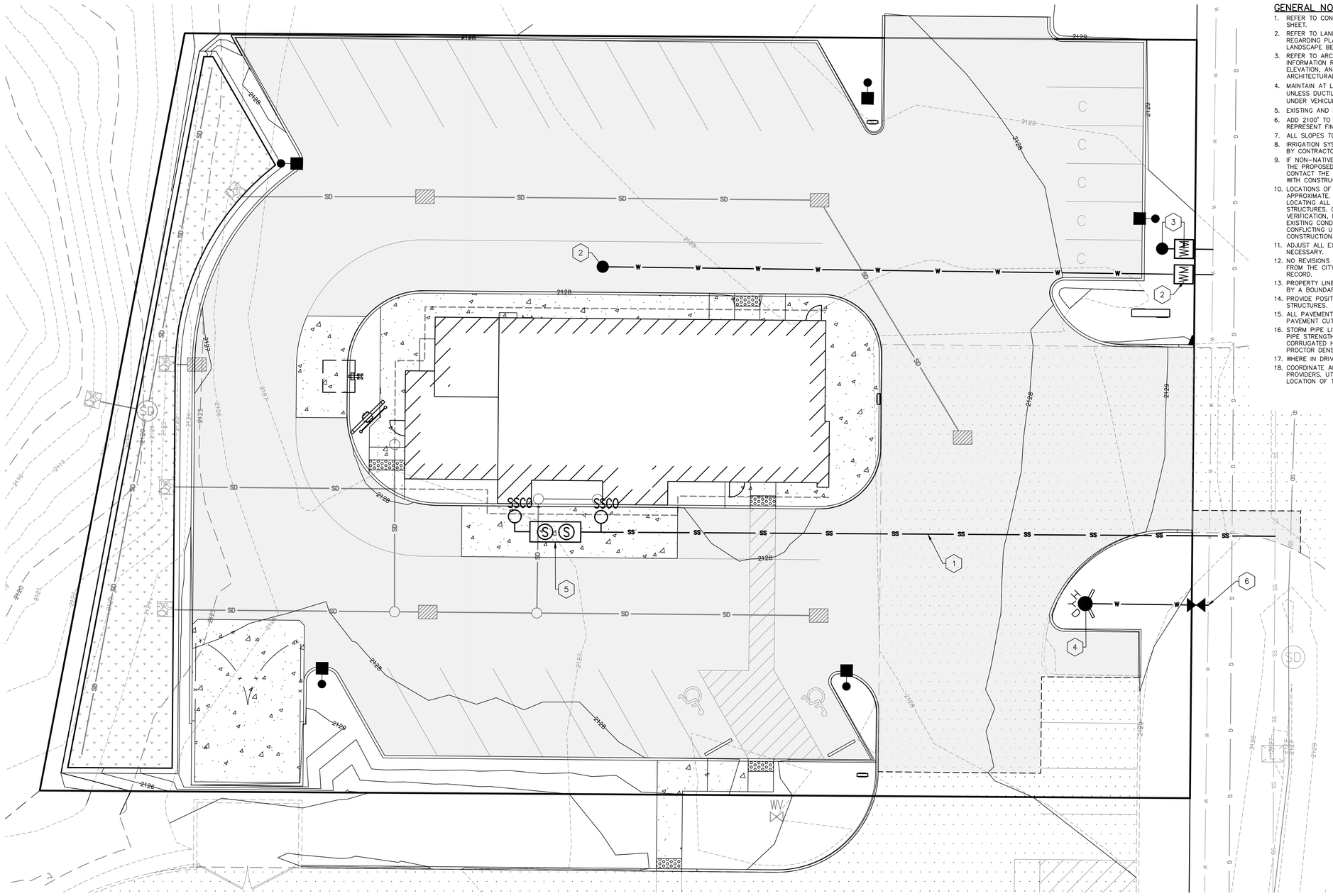

GENERAL NOTES

1. REFER TO CONSTRUCTION NOTES AND DETAILS SHOWN ON DETAIL SHEET.
2. REFER TO LANDSCAPE DOCUMENTS FOR ADDITIONAL INFORMATION REGARDING PLANTINGS, IRRIGATION SYSTEM, SITE FURNITURE, LANDSCAPE BERMS, STEPS, AND LANDSCAPE WALLS.
3. REFER TO ARCHITECTURAL DOCUMENTS FOR ADDITIONAL INFORMATION REGARDING ANY STEPS IN FINISH FLOOR, BASEMENT ELEVATION, AND EXTERIOR DOOR LOCATIONS. COORDINATE ARCHITECTURAL ELEVATIONS WITH SITE GRADING.
4. MAINTAIN AT LEAST 2' OF COVER OVER STORM DRAIN PIPES, UNLESS DUCTILE IRON THEN MAINTAIN AT LEAST 1' OF COVER. IF UNDER VEHICULAR TRAFFIC, MAINTAIN 3' OF COVER.
5. EXISTING AND PROPOSED CONTOURS ARE SHOWN AT 1' INTERVALS.
6. ADD 2100' TO EACH SPOT ELEVATION. SPOT ELEVATIONS REPRESENT FINISH SURFACE GRADES.
7. ALL SLOPES TO BE 3:1 MAX UNLESS OTHERWISE INDICATED.
8. IRRIGATION SYSTEM FOR SWALES AND DITCHES SHALL BE PROVIDED BY CONTRACTOR.
9. IF NON-NATIVE MATERIAL IS ENCOUNTERED AT THE LOCATION OF THE PROPOSED DRYWELLS OR SWALES, THE CONTRACTOR SHALL CONTACT THE DESIGN ENGINEER PRIOR TO PROCEEDING FURTHER WITH CONSTRUCTION.
10. LOCATIONS OF EXISTING UTILITIES SHOWN ON THE PLANS ARE APPROXIMATE. THE CONTRACTOR SHALL BE RESPONSIBLE FOR LOCATING ALL UNDERGROUND AND OVERHEAD UTILITIES AND STRUCTURES. CONTRACTOR TO PERFORM NECESSARY FIELD VERIFICATION, INCLUDING SUBSURFACE EXPLORATION, FOR ALL EXISTING CONDITIONS TO BE INCLUDED IN CONTRACTOR BID. ANY CONFLICTING UTILITIES SHALL BE RELOCATED PRIOR TO CONSTRUCTION OF PROPOSED IMPROVEMENTS.
11. ADJUST ALL EXISTING UTILITY COVERS TO FINISHED GRADE AS NECESSARY.
12. NO REVISIONS SHALL BE MADE TO THE PLANS WITHOUT APPROVAL FROM THE CITY OF PONDERAY AND THE DESIGN ENGINEER OF RECORD.
13. PROPERTY LINES OF SUBJECT PROPERTY HAVE NOT BEEN VERIFIED BY A BOUNDARY SURVEY.
14. PROVIDE POSITIVE DRAINAGE AWAY FROM BUILDINGS AND STRUCTURES.
15. ALL PAVEMENT CUTS MUST CONFORM TO THE INLAND REGIONAL PAVEMENT CUT POLICY.
16. STORM PIPE LISTED AS PVC IS TO BE PVC SDR-35. PVC MINIMUM PIPE STRENGTH OF 46 PSI. PIPE LISTED AS CPEP IS TO ADS N-12 CORRUGATED HDPE. TRENCH TO BE COMPACTED TO 95% MODIFIED PROCTOR DENSITY.
17. WHERE IN DRIVABLE SURFACES, CLEANOUTS TO BE TRAFFIC RATED.
18. COORDINATE ALL UTILITY INSTALLATION WITH THE INDIVIDUAL PROVIDERS. UTILITY PROVIDERS SHALL DETERMINE THE ACTUAL LOCATION OF THE UTILITIES.

TABLE

1. CONNECT TO EXISTING 8" SEWER MAIN WITH ROMMAC TAPPING SADDLE AND 6" SCHEDULE 40 ABS SEWER SERVICE PER KOOTENAI PONDERAY SEWER DISTRICT. SEE PLUMBING PLANS FOR CONTINUATION TO BUILDING. APPROXIMATE I.E. AT CONNECTION = 2118.36
2. 2" C901 HDPE (200 PSI, CTS) WATER SERVICE AND METER PER CITY OF SANDPOINT WATER DEPARTMENT. SEE PLUMBING PLANS FOR CONTINUATION TO BUILDING.
3. 1 1/2" C901 HDPE (200 PSI, CTS) IRRIGATION SERVICE AND METER PER CITY OF SANDPOINT WATER DEPARTMENT. IRRIGATION SYSTEM TO BE DESIGN BUILD.
4. FIRE HYDRANT ASSEMBLY PER CITY OF SANDPOINT WATER DEPARTMENT.
5. 1500 GALLON GREASE TRAP. SEE PLUMBING PLANS FOR MORE INFORMATION.
6. 12"x6" TAPPING SADDLE AND VALVE FOR HOT TAP TO EXISTING 12" PVC WATER MAIN.

SITE TBM

5/8" REBAR WITH CAP
ELEV. = 2122.80
SEE C0 FOR MORE INFORMATION.

TOPOGRAPHIC SURVEY BY OTHERS.

GRAPHIC SCALE

10 0 5 10 20

(IN FEET)
1 inch = 10 ft.

NOTE: REFER TO COVER AND INDEX SHEET FOR VICINITY MAP.

CALL BEFORE YOU DIG 811

No.	DESC. / DATE	BY
5		
4		
3		
2		
1		

storhäug
civil engineering | planning
landscape architecture | surveying
510 east third avenue | spokane, wa | 99202
509.242.1000 | www.storhaugINC.com

SHEET TITLE: UTILITY PLAN

PROJECT TITLE: WENDY'S PONDERAY, IDAHO

SEAL: PROFESSIONAL ENGINEER LICENSED 7242 9/15/20 STATE OF IDAHO STEVEN P. SOLTYS

DATE	09/18/2020
DRAWN	JCS
CHECKED	SPS
PROJECT NUMBER	20-190
DRAWING NO.	C5

UTILITIES

20-190 C5 UTILITIES.dwg UTILITY

ALL DISTURBED AREAS SHALL BE HYDROSEEDED PER THE SEEDING SPECIFICATIONS. PROVIDE FRESH, CLEAN NEW CROP SEED COMPLYING WITH TOLERANCE FOR PURITY AND GERMINATION ESTABLISHED BY OFFICIAL SEED ANALYSTS OF NORTH AMERICA. PROVIDE SEED MIXTURE COMPOSED OF GRASS SPECIES AND PERCENTAGES AS FOLLOWS:

20 PERCENT ELKA PERENNIAL RYE
20 PERCENT DURAR HARD FESCUE
45 PERCENT COVAR SHEEP/FESCUE
15 PERCENT REUBENS CANADIAN BLUEGRASS

PROVIDE MIXTURE COMPOSED OF GRASS SEED AND FERTILIZER IN PERCENTAGES AS FOLLOWS:

GRASS SEED MIXTURE: 90 LB.S PER ACRE
FERTILIZER: 16:16:16 TIMED RELEASE COMPOSITION, 300 LBS. PER ACRE

ALL SEEDING OF SLOPES SHALL BE DONE IN ACCORDANCE WITH WSDOT STANDARD SPECIFICATIONS. CONTRACTOR SHALL IRRIGATE SEEDED AREAS UNTIL SEED HAS GERMINATED AND HAS BEEN ACCEPTED BY THE LOCAL JURISDICTION.

SEEDING SPECIFICATIONS

DRAINAGE PIPE OUTFALLS							
LOCATION	ROCK SIZE			PAD DIMENSIONS			
	MIN.	AVG.	MAX.	THICKNESS	A	B	C
IN POND	6"	8"	10"	12"	2.0'	8.25'	5.50'
AT OUTFALL	6"	8"	10"	12"	1.5'	6.25'	7.75'

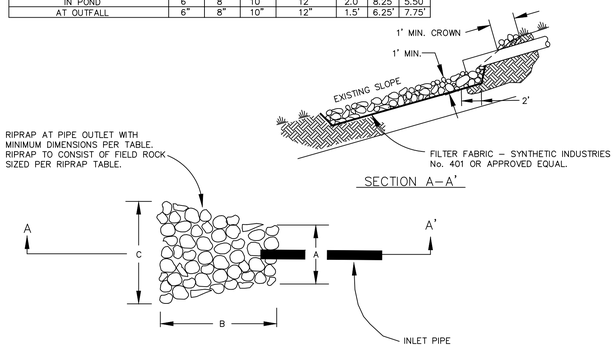

RIPRAP DETAIL

NTS

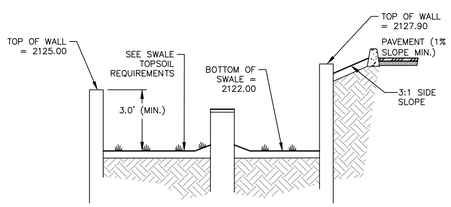

NOTES

1. SEED OR SOD PER SEEDING SPECIFICATIONS THIS PAGE.
2. SWALE SIDE SLOPES TO BE 3:1 MAX (H:V).
3. GRADE OF THE SWALE BOTTOM SHALL BE FLAT.
4. FOR SWALES AND PONDS THE TOP 12" OF SOIL SHALL CONSIST OF A THOROUGHLY BLENDED MIX OF 50% COMPOST WITH 50% NATIVE SOIL

SWALE "A" SECTION

NTS

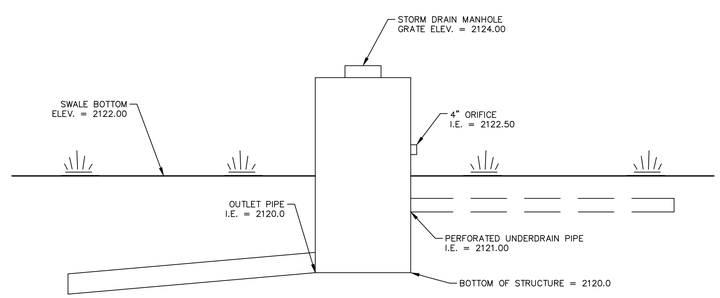

OUTLET CONTROL STRUCTURE DETAIL

NTS

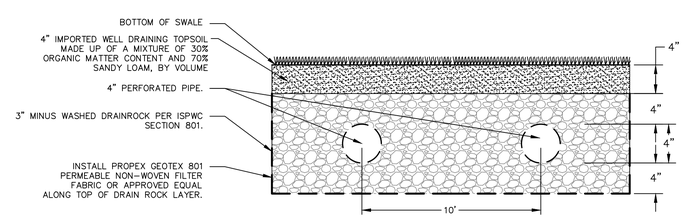

SWALE UNDERDRAIN

NTS

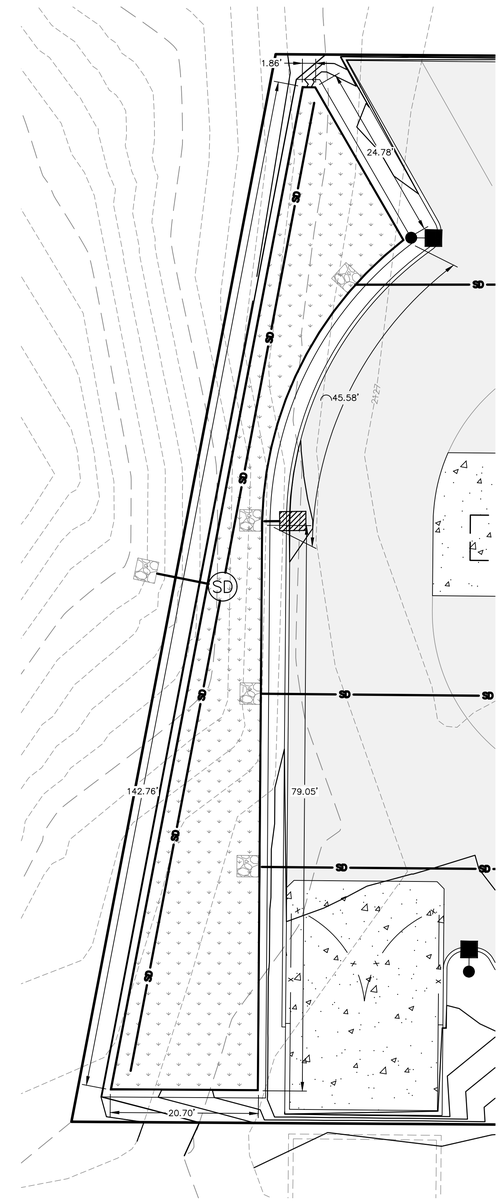

SWALE "A" AREAS AND ELEVATIONS:
BOTTOM ELEVATION: 2122.00
STRUCTURE GRATE ELEVATION: 2124.00
BOTTOM AREA: 1,585 SF

SWALE "A" DETAIL

SCALE: 1" = 10'

CALL BEFORE YOU DIG 811

20-190 C6 DETAILS.dwg SWALE

No.	DESC. / DATE	BY
5		
4		
3		
2		
1		

storhäug
civil engineering | planning
landscape architecture | surveying
510 east third avenue | spokane, wa | 99202
509.242.1000 | www.storhauginc.com

SHEET TITLE: SWALE DETAIL SHEET

PROJECT TITLE: WENDY'S PONDERAY, IDAHO

SEAL

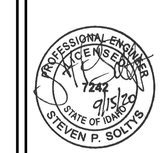

DATE	09/18/2020
DRAWN	JCS
CHECKED	SPS
PROJECT NUMBER	20-190
DRAWING NO.	C7

DETAILS

1. CONSTRUCTION SHALL CONFORM TO THE LATEST REVISION OF THE CITY OF SANDPOINT WATER DEPARTMENT STANDARDS FOR THE WATER SYSTEM, KOOTENAI PONDERAY SEWER DISTRICT STANDARDS FOR SANITARY SEWER, AND CITY OF PONDERAY STANDARDS FOR STORM WATER MANAGEMENT PLAN. UNLESS IT IS SPECIFICALLY EXCEPTED IN THE PLANS OR CONTRACT DOCUMENTS, ALL CONSTRUCTION METHODS AND MATERIALS SHALL BE IN ACCORDANCE WITH THE LATEST STANDARD SPECIFICATIONS FOR ROAD, BRIDGE, AND MUNICIPAL CONSTRUCTION AS PROMULGATED JOINTLY BY THE IDAHO STANDARDS FOR PUBLIC WORK CONSTRUCTION (ISPWC) AND THE AMERICAN PUBLIC WORKS ASSOCIATION (APWA). CONSTRUCTION AND TESTING SHALL COMPLY WITH THE REGULATIONS OF THE APPROPRIATE LOCAL REGULATORY AGENCIES.
2. CONTRACTOR SHALL REFER TO CITY OF SANDPOINT WATER DEPARTMENT DESIGN AND CONSTRUCTION STANDARDS FOR WATER SYSTEM, KOOTENAI PONDERAY SEWER DISTRICT STANDARDS FOR SANITARY SEWER, AND CITY OF PONDERAY STANDARDS FOR STORM DRAINAGE FOR ADDITIONAL REQUIREMENTS.
3. A PLUG SHALL BE INSTALLED AT THE END OF ALL SERVICE LINES UNTIL SUCH TIME THAT SERVICE IS EXTENDED TO BUILDING FOR CONNECTION.
4. WATER AND FIRE SERVICE LINES AND APPURTENANCES SHALL MEET THE CITY OF SANDPOINT WATER DEPARTMENT AND FIRE DEPARTMENT REQUIREMENTS UNLESS NOTED OTHERWISE. WATER LINES SHALL BE INSTALLED WITH MINIMUM COVER OF 60 INCHES FROM TOP OF PIPE.
5. MAINTAIN CLEARANCES BETWEEN WATER PIPE AND PIPE CARRYING NON-POTABLE WATER PER CITY OF SANDPOINT WATER DEPARTMENT STANDARDS.
6. LOCATIONS OF EXISTING UTILITIES SHOWN ON THE PLANS ARE APPROXIMATE. THE CONTRACTOR SHALL BE RESPONSIBLE FOR LOCATING ALL UNDERGROUND AND OVERHEAD UTILITIES. ANY CONFLICTING UTILITIES SHALL BE RELOCATED PRIOR TO CONSTRUCTION OF PROPOSED IMPROVEMENTS.
7. PRIOR TO CONSTRUCTION THE CONTRACTOR IS RESPONSIBLE FOR LOCATING UNDERGROUND UTILITIES. CALL THE UNDERGROUND UTILITY LOCATION SERVICE AT 456-8000 BEFORE YOU DIG.
8. IF THE CONTRACTOR DISCOVERS ANY DISCREPANCIES BETWEEN THE CONSTRUCTION DOCUMENTS AND EXISTING CONDITIONS ENCOUNTERED, THE CONTRACTOR SHALL IMMEDIATELY NOTIFY THE DESIGN ENGINEER.
9. UTILITY TRENCHING SHALL BE DONE IN ACCORDANCE WITH CITY OF PONDERAY AND BONNER COUNTY STANDARDS.
10. THE CONTRACTOR SHALL HAVE A COMPLETE SET OF APPROVED PLANS ON THE JOB SITE WHENEVER CONSTRUCTION IS IN PROGRESS.
11. THE CONTRACTOR SHALL REVIEW THE GEOTECHNICAL REPORT PRIOR TO STARTING CONSTRUCTION. ANY DISCREPANCIES BETWEEN THE CONSTRUCTION DOCUMENTS AND THE GEOTECHNICAL REPORT SHALL BE REPORTED TO THE ENGINEER. CONSTRUCTION SHALL COMPLY WITH RECOMMENDATIONS OF THE GEOTECHNICAL REPORT AND ALL ADDENDA.
12. CONSTRUCTION SHALL COMPLY WITH THE AMERICANS WITH DISABILITIES ACT ACCESSIBILITY GUIDELINES (ADAAG).
13. IF FIELD GRADE ADJUSTMENTS ARE REQUIRED, THE CONTRACTOR SHALL NOTIFY THE ENGINEER IMMEDIATELY.
14. THE CONTRACTOR SHALL COMPLY WITH ALL REQUIREMENTS FOR STORM WATER DISCHARGE ASSOCIATED WITH CONSTRUCTION ACTIVITY.
15. UNLESS ELEVATIONS AND/OR CONTOURS ARE OTHERWISE SHOWN, NEW FINISH GRADE SURFACES SHALL BE PLACED TO ALLOW FOR POSITIVE DRAINAGE TO CURB, GUTTER, OR OTHER RUNOFF COLLECTION DEVICES. MAINTAIN POSITIVE DRAINAGE AWAY FROM THE BUILDING.
16. DEBRIS RESULTING FROM DEMOLITION OF EXISTING SITE IMPROVEMENTS SHALL BE REMOVED FROM THE SITE AND MAY NOT BE USED AS BACKFILL. ANY UTILITIES TO BE ABANDONED SHALL BE REMOVED FROM THE BUILDING AREAS OR SHOULD BE FULLY PRESSURE GROUTED AND THEIR ENDS SHALL BE CAPPED.

CONSTRUCTION SPECIFICATIONS

NOTES

1. PLACE ACCEPTABLE SOIL MATERIAL IN LAYERS TO REQUIRED SUBGRADE ELEVATIONS.
2. MATERIAL AND COMPACTION REQUIREMENTS SHALL CONFORM WITH APPLICABLE STANDARDS AND GEOTECHNICAL ENGINEERING RECOMMENDATIONS ASSOCIATED WITH THE SUBJECT SITE.
3. IF THE EXISTING SUBGRADE SOIL CONDITIONS INHIBIT PROPER COMPACTION, IT MAY BE NECESSARY TO OVER-EXCAVATE A MINIMUM 12" AND REPLACE WITH APPROVED ONSITE MATERIAL OR IMPORTED MATERIAL.
4. OPTIONAL LIGHT DUTY PAVING SECTION TO BE USED IN CARS ONLY TRAFFIC AREAS: 2.5" HMA OVER 4" CRUSHED AGGREGATE BASE OVER 18" COMPACTED STRUCTURAL FILL SUBGRADE

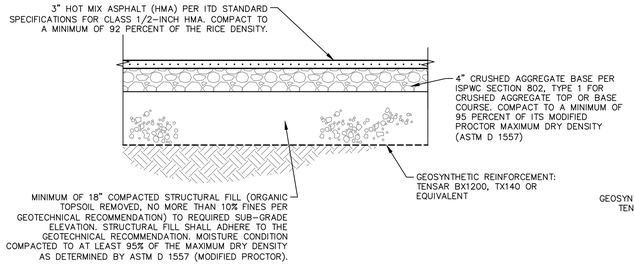

TYPICAL ASPHALT PAVEMENT SECTION

NTS

NOTES

1. PLACE ACCEPTABLE SOIL MATERIAL IN LAYERS TO REQUIRED SUBGRADE ELEVATIONS. COMPACTION AND MATERIAL TO BE IN ACCORDANCE WITH THE GEOTECHNICAL REPORT.
2. CONCRETE SLOPE NOT TO EXCEED 2.0% UNLESS OTHERWISE SPECIFIED BY THE DESIGN.
3. 1/2" TRANSVERSE PERFORMED BITUMINOUS JOINTS AT THE TERMINUS POINTS FOR CURVE AND WHERE CONCRETE IS PLACED BETWEEN TWO PERMANENT FOUNDATIONS, PLACE 1/2" EXPANSION JOINT MATERIAL ALONG THE BACK OF CONCRETE THE FULL LENGTH.

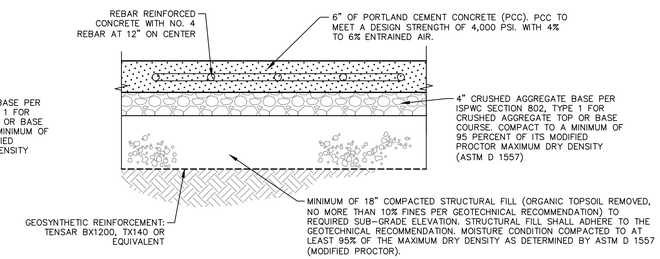

REINFORCED CONCRETE PAVEMENT SECTION

NTS

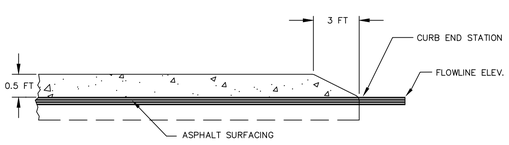

CURB NOSEDOWN DETAIL

NTS

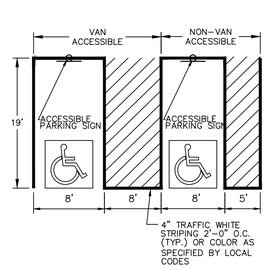

ACCESSIBLE PARKING STRIPING DETAIL

NOTES:
1. SEE SITE PLAN FOR COMPLETE LAYOUT
2. THESE DETAILS ARE FOR REFERENCE AND DIMENSION CONTROL ONLY
3. ALL DIMENSIONS ARE TO OF STRIPE UNLESS OTHERWISE INDICATED

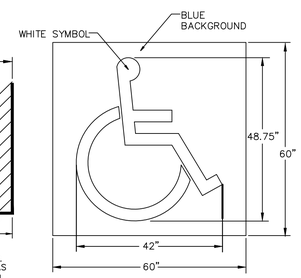

ACCESSIBLE PARKING SYMBOL

LOCATE CENTERED AT DRIVE AISLE EDGE OF PARKING SPACE

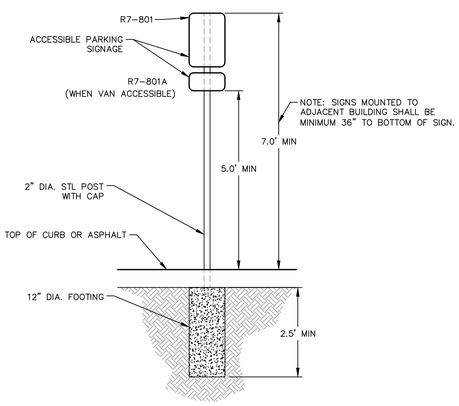

ADA PARKING DETAIL

NTS

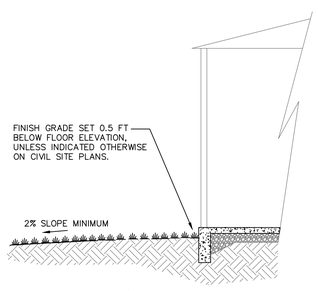

TYPICAL GRADING/BUILDING SECTION

NTS

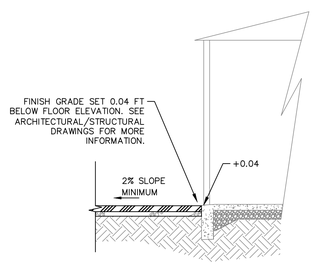

TYPICAL ON-SITE SIDEWALK/BUILDING SECTION

NTS

20-190 C6 DETAILS.dwg DETAIL

CALL BEFORE YOU DIG 811

No.	DESC. / DATE	BY
5		
4		
3		
2		
1		

storhäug
civil engineering | planning
landscape architecture | surveying
510 east third avenue | spokane, wa | 99202
509.242.1000 | www.storhauginc.com

SHEET TITLE: DETAIL SHEET

PROJECT TITLE: WENDY'S PONDERAY, IDAHO

SEAL

PROFESSIONAL ENGINEER LICENSED 12242 9/15/20 STATE OF IDAHO STEVEN P. SOLTYS

DATE	09/18/2020
DRAWN	JCS
CHECKED	SPS
PROJECT NUMBER	20-190
DRAWING NO.	C6

DETAILS

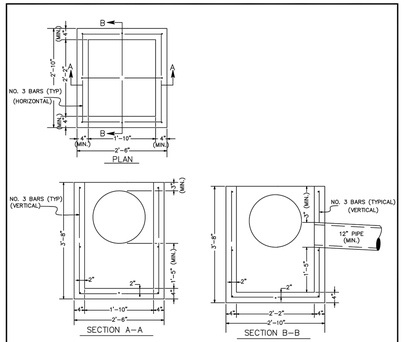

GENERAL NOTES

1. CATCH BASIN SHALL BE CONSTRUCTED IN ACCORDANCE WITH ASTM C 478 (AASHTO M 199) & ASTM C 890 UNLESS OTHERWISE SHOWN ON PLANS OR NOTED IN THE PROJECT SPECIAL PROVISIONS.
2. PRECAST BASINS SHALL BE FURNISHED WITH CUTOUTS OR KNOCKOUTS. KNOCKOUTS SHALL HAVE A WALL THICKNESS OF 2" MINIMUM.
3. KNOCKOUTS SHALL BE ON ALL 4 SIDES WITH MAXIMUM DIAMETER OF 20". KNOCKOUTS SHALL BE ROUND. PIPE SHALL BE INSTALLED IN FACTORY SUPPLIED KNOCKOUTS.
4. KNOCKOUT OR CUTOUT HOLE SIZE IS EQUAL TO PIPE OUTER DIAMETER PLUS CATCH BASIN WALL THICKNESS.
5. WHEN PVC PIPE IS USED, A SAND COLLAR SHALL BE GROUTED INTO CATCH BASIN.
6. BASIN TO BE INSTALLED PERPENDICULAR TO CURB WHEN HOODED FRAME USED (TYPE 2).
7. GROUT FROM OUTSIDE FIRST. PACK WITH BRICK/ROCK, IF NEEDED, TO PREVENT GROUT FROM FALLING IN.

REVISION	APPROVED	DATE	CITY OF COEUR d'ALENE STANDARD DRAWING	APPROVED BY:	
			TYPE 1 CATCH BASIN	CITY ENGINEER, PE #8824	3/27/18 DATE
				DWG NO. SD-1	

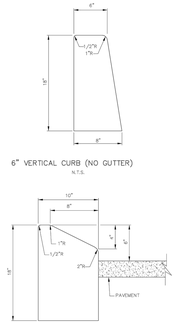

NOTES:

A. GRADE AND ALIGNMENT TO BE ESTABLISHED BY THE ENGINEER AND THE PUBLIC AGENCY HAVING JURISDICTION.
B. CONTINUOUS PLACEMENT PREFERRED, SCORE INTERVALS MINIMUM EIGHT FEET.
C. MATERIALS AND CONSTRUCTION IN COMPLIANCE WITH ISPWC SPECIFICATIONS.
D. BACKFILLS AS PER ISPWC SECTION 706.
E. SECURE RIGHT-OF-WAY PERMIT BEFORE CONSTRUCTION IN PUBLIC RIGHT-OF-WAY.

2005

IDAHO STANDARDS FOR PUBLIC WORKS CONSTRUCTION	6" VERTICAL CURB (NO GUTTER)	STANDARD DRAWING NO. SD-701A

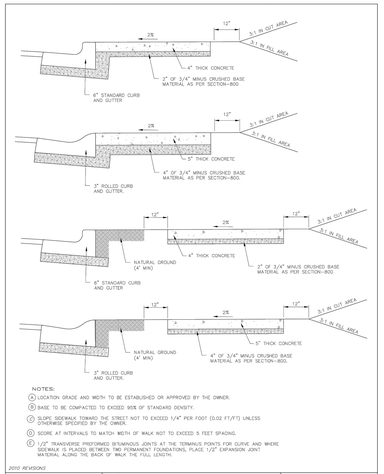

NOTES:

A. LOCATION GRADE AND WIDTH TO BE ESTABLISHED OR APPROVED BY THE OWNER.
B. BASE TO BE COMPACTED TO EXCEED 95% OF STANDARD DENSITY.
C. SLOPE SIDEWALK TOWARD THE STREET NOT TO EXCEED 1/4" PER FOOT (0.02 FT/FT) UNLESS OTHERWISE SPECIFIED BY THE OWNER.
D. SCORE AT INTERVALS TO MATCH WIDTH OF WALK NOT TO EXCEED 5 FEET SPACING.
E. 1/2" TRANSVERSE PREFORMED BITUMINOUS JOINTS AT THE TERMINUS POINTS FOR CURVE AND WHERE SIDEWALK IS PLACED BETWEEN TWO PERMANENT FOUNDATIONS, PLACE 1/2" EXPANSION JOINT MATERIAL ALONG THE BACK OF WALK THE FULL LENGTH.

2010 REVISIONS

IDAHO STANDARDS FOR PUBLIC WORKS CONSTRUCTION	CONCRETE SIDEWALK	STANDARD DRAWING NO. SD-709

NOTES:

A. DETECTABLE WARNINGS SHALL BE 24" IN THE DIRECTION OF TRAVEL AND EXTEND THE FULL WIDTH OF THE CURB RAMP, LANDING OR BLEND TRANSITION.
B. DETECTABLE WARNINGS SHALL HAVE A DIAMETER OF 50% TO 65% OF THE BASE DIAMETER OF DOME.
C. DETECTABLE WARNING DOMES SHALL BE PRE-MANUFACTURED UNITS INTEGRALLY CAST INTO CONCRETE RAMP TO ACHIEVE THE TRUNCATED DOME DIMENSIONS AND SPACING SHOWN. *INSTALLATION TO BE PER MANUFACTURER'S SPECIFICATIONS.* SURFACES SHALL CONTRAST VISUALLY WITH ADJACENT WALK SURFACES. EITHER LIGHT-ON-DARK, OR DARK-ON-LIGHT. METHODS OF CONSTRUCTION AND COLORATION MUST BE APPROVED BY THE OWNER PRIOR TO INSTALLATION.

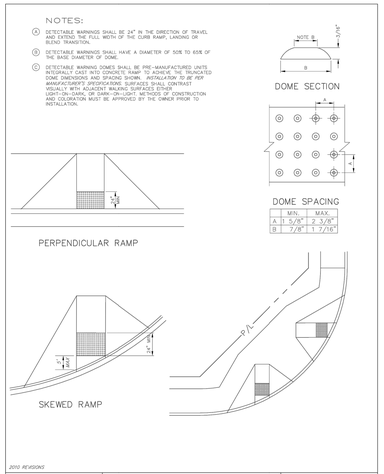

	MIN.	MAX.
A	1 5/8"	2 3/8"
B	7/8"	1 7/16"

2010 REVISIONS

IDAHO STANDARDS FOR PUBLIC WORKS CONSTRUCTION	DETECTABLE WARNING FOR PEDESTRIAN ACCESS	STANDARD DRAWING NO. SD-712

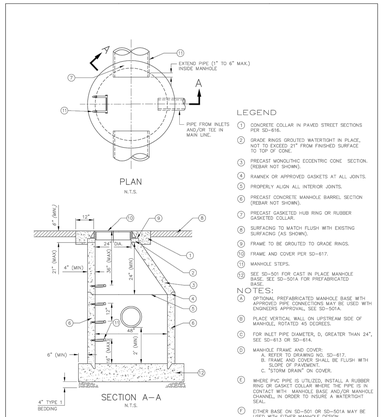

LEGEND

1. CONCRETE COLLAR IN PAVED STREET SECTIONS PER SD-616.
2. GRADE RINGS GROUTED WATERTIGHT IN PLACE, 2" MINIMUM TO 12" MAXIMUM FROM FINISHED SURFACE TO TOP OF CONE.
3. PRECAST MONOLITHIC ECCENTRIC CONE SECTION. (REBAR NOT SHOWN).
4. RAMNEK OR APPROVED GASKETS AT ALL JOINTS.
5. PROPERLY ALIGN ALL INTERIOR JOINTS.
6. PRECAST CONCRETE MANHOLE BARREL SECTION (REBAR NOT SHOWN).
7. PRECAST GASKETED HUB RING OR RUBBER GASKETED COLLAR.
8. SURFACING TO MATCH FLUSH WITH EXISTING SURFACING (AS SHOWN).
9. FRAME TO BE GROUTED TO GRADE RINGS.
10. FRAME AND COVER PER SD-617.
11. MANHOLE STEPS.
12. SEE SD-501 FOR CAST IN PLACE MANHOLE BASE. SEE SD-501A FOR PREFABRICATED BASE.

NOTES:

A. OPTIONAL PREFABRICATED MANHOLE BASE WITH APPROVED PIPE CONNECTIONS MAY BE USED WITH ENGINEERS APPROVAL, SEE SD-501A.
B. PLACE VERTICAL WALL ON UPSTREAM SIDE OF MANHOLE, ROTATED 45 DEGREES.
C. FOR INLET PIPE DIAMETER, D, GREATER THAN 24", SEE SD-613 OR SD-614.
D. MANHOLE FRAME AND COVER:
   A. FRAME AND COVER PER SD-617.
   B. FRAME AND COVER SHALL BE FLUSH WITH SLOPE OF PAVEMENT.
   C. "STORM DRAIN" ON COVER.
E. WHERE PVC PIPE IS UTILIZED, INSTALL A RUBBER RING OR GASKET COLLAR WHERE THE PIPE IS IN CONTACT WITH MANHOLE BASE AND/OR MANHOLE WALL, IN ORDER TO ASSURE A WATERTIGHT SEAL.
F. EITHER BASE ON SD-501 OR SD-501A MAY BE USED WITH EITHER MANHOLE DESIGN.

2008 REVISIONS

IDAHO STANDARDS FOR PUBLIC WORKS CONSTRUCTION	STANDARD CONCRETE CATCH MANHOLE	STANDARD DRAWING NO. SD-611

CALL BEFORE YOU DIG 811

20-190 C8 STANDARDS.dwg STANDARDS

No.	DESC. / DATE	BY
5		
4		
3		
2		
1		

storhäug
civil engineering | planning
landscape architecture | surveying
510 east third avenue | spokane, wa | 99202
509.242.1000 | www.storhauginc.com

SHEET TITLE: STANDARDS

PROJECT TITLE: WENDY'S PONDERAY, IDAHO

SEAL

PROFESSIONAL ENGINEER LICENSED 12242 9/18/20 STATE OF IDAHO STEVEN P. SOLTYS

DATE	09/18/2020
DRAWN	JCS
CHECKED	SPS
PROJECT NUMBER	20-190
DRAWING NO.	C8

DETAILS

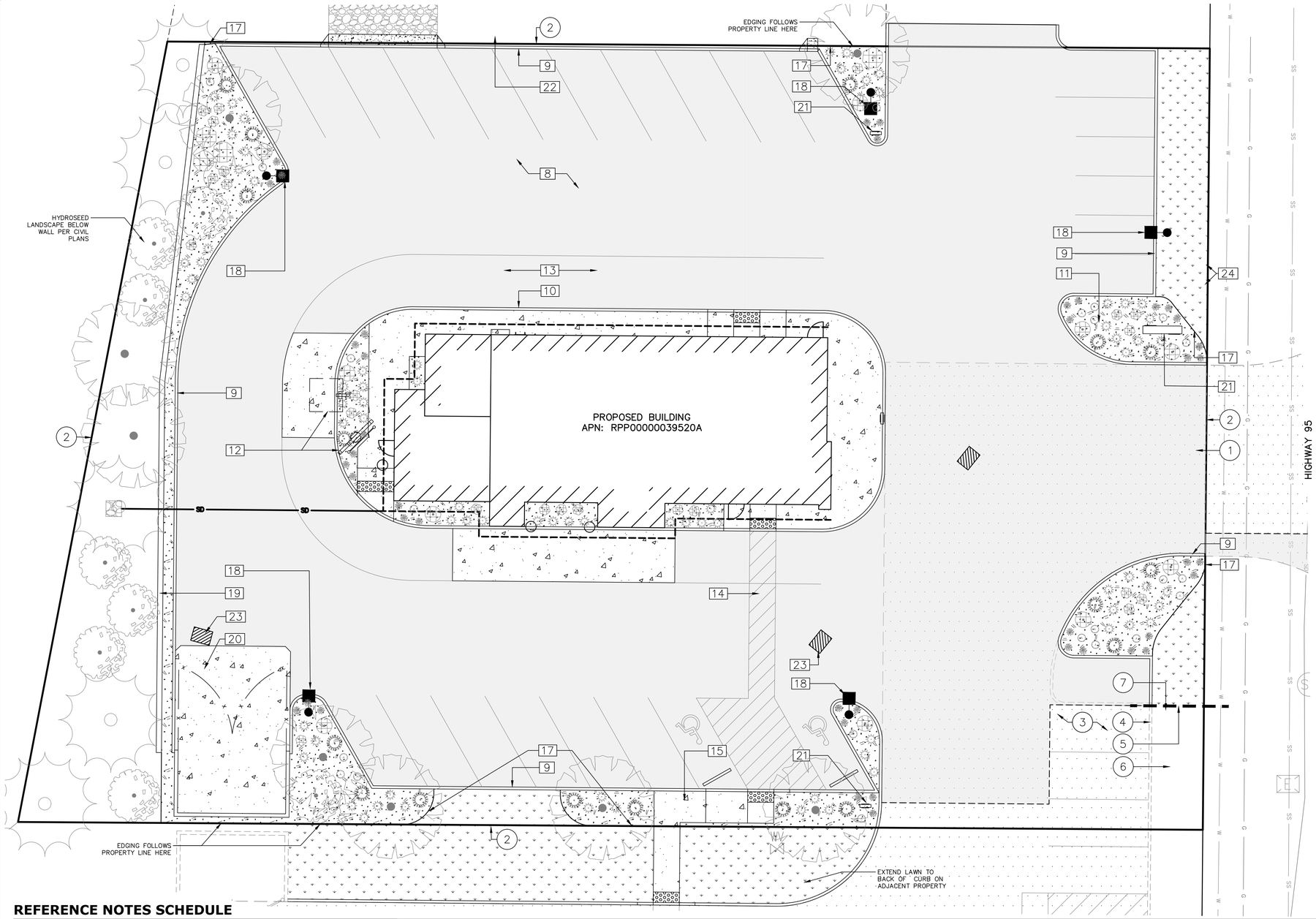

GENERAL NOTES:

1. THESE DRAWINGS ARE DERIVED FROM A LEGAL SURVEY. NOTIFY THE LANDSCAPE ARCHITECT FIRST IF FIELD ADJUSTMENT TO PLANS IS REQUIRED.
2. SEE ENGINEERING PLANS FOR GRADING, DRAINAGE AND UTILITIES. SEE ARCHITECTURAL PLANS FOR BUILDING INFORMATION.
3. CONTRACTOR IS RESPONSIBLE FOR LOCATION OF ALL UNDERGROUND UTILITIES PRIOR TO DIGGING. ANY DAMAGE TO UTILITIES WILL BE REPAIRED AT THE CONTRACTOR'S EXPENSE. CALL BEFORE YOU DIG: TELEPHONE #811.
4. APPLICATION AND PAYMENT FOR ALL REQUIRED PERMITS AND INSPECTIONS IS THE RESPONSIBILITY OF THE CONTRACTOR. LOCAL CODES PREVAIL.
5. CONTRACTOR TO KEEP A FULL SET OF LANDSCAPE PLANS ON SITE FOR THE DURATION OF THE LANDSCAPE INSTALLATION.
6. CLEARING AND GRUBBING ALL LANDSCAPE AREAS OF DEBRIS TO BE PEROFRMED BY THE GENERAL CONTRACTOR. ALL PLANT BED AREAS AND LAWN AREAS TO BE CLEARED OF EXISTING TREE ROOTS, WEEDS, LAWN AND DEBRIS AND TO BE CONTOURED FOLLOWING GRADES SHOWN ON CIVIL PLANS; SOIL TO BE CLEAR OF ALL ROCK AND DEBRIS LARGER THAN 1.5" WITHIN 12" OF FINISHED GRADE
7. ROUGH GRADE FOR ALL LANDSCAPE AREAS TO BE THE RESPONSIBILITY OF THE GENERAL CONTRACTOR. ROUGH GRADES SHALL BE WITH .10 OF A FOOT OF GRADES SHOWN ON CIVIL DRAWINGS, MINUS SPECIFIED DEPTH OF TOPSOIL.
8. FINISH GRADE TO BE RAKED SMOOTH AND NATURAL WITH NO SLOPE TO EXCEEDING 3:1.
9. ALL PLANT BED AND LAWN AREAS TO RECEIVE 6" OF CLEAN TOP SOIL.
10. ALL TOP SOIL IMPORTED TO THE SITE MUST CONSIST OF SANDY LOAM AND MUST BE NONTOXIC, FREE OF NOXIOUS WEEDS, GRASS, BRUSH, STICKS OR ROCKS GREATER THAN ½" IN DIA.
11. ALL SOIL AMENDMENTS SPECIFIED ARE FOR BIDDING PURPOSES ONLY. THE CONTRACTOR SHALL PROVIDE FOR A SOILS AGRONOMY REPORT FROM AN APPROVED SOILS LABORATORY AND/OR ANY ADDITIONAL SPECIFICATION PROVIDED BY THE LANDSCAPE ARCHITECT PRIOR TO INSTALLATION OF PLANT MATERIALS.

REFERENCE NOTES SCHEDULE

SYMBOL	DESCRIPTION	QTY	DETAIL
1	EXISTING APPROACH		
2	PROPERTY LINE		
3	EXISTING ASPHALT PAVING - TO REMAIN		
4	EXISTING CURB - SEE SURVEY		
5	APPROXIMATE EDGE OF EXISTING LANDSCAPING - PROPOSED LANDSCAPING TO MEET EDGE OF EXISTING LANDSCAPING - CONTRACTOR TO FIELD VERIFY PRIOR TO SUBMITTING BID		
6	EXISTING LANDSCAPING TO REMAIN		
7	REPAIR EXISTING LANDSCAPING AS NECESSARY		
8	PROPOSED ASPHALT PARKING LOT - SEE CIVIL PLANS		
9	PROPOSED 6" CONCRETE PARKING CURB - SEE ARCHITECTURAL PLANS		
10	PROPOSED 4.5` WIDE CONCRETE SIDEWALK - SEE ARCHITECTURAL PLANS		
11	PROPOSED FIRE HYDRANT - SEE CIVIL PLANS		
12	PROPOSED MENU BOARD AND ORDERING KIOSK - SEE ARCHITECTURAL PLANS		
13	PROPOSED DRIVE-THROUGH LANE - SEE ARCHITECTURAL PLANS		
14	PROPOSED PEDESTRIAN CROSSING - SEE ARCHITECTURAL PLANS		
15	PROPOSED 6` WIDE CONCRETE SIDEWALK - SEE ARCHITECTURAL PLANS		
17	PROPOSED ALUMINUM OR POLY LANDSCAPE EDGING	147 lf	8/L3
18	PROPOSED AREA LIGHT - SEE ARCHITECTURAL PLANS FOR MORE INFORMATION		
19	PROPOSED RETAINING WALL - SEE CIVIL PLANS FOR MORE NIFORMATION		
20	PROPOSED GARBAGE ENCLOSURE - SEE ARCHITECTURAL PLANS FOR MORE INFORMATION		
21	PROPOSED SIGNAGE - SEE ARCHITECTURAL PLANS FOR MORE INFORMATION		
22	PROPOSED DRAINAGE SWALE - SEE ARCHITECTURAL PLANS FOR MORE INFORMATION		
23	PROPOSED CATCH BASIN - SEE CIVIL PLANS FOR MORE INFORMATION		
24	PROPOSED DOMESTIC AND IRRIGATION WATER METER - SEE CIVIL PLANS FOR MORE INFORMATION		

SYMBOL	DESCRIPTION	QTY	DETAIL
	LAWN	2,365 sf	
	LANDSCAPE PLANTING BEDS - 2-1/2" DIA. WASHED RIVER ROCK MULCH. MINIMUM DEPTH 3" OVER COMMERCIAL GRADE WEED BERRIER	2,929 sf	

CALL BEFORE YOU DIG 811

20-190 LS SITE.dwg L1

No.	DESC. / DATE	BY
5		
4		
3		
2		
1		

storhäug
civil engineering | planning
landscape architecture | surveying
510 east third avenue | spokane, wa | 99202
509.242.1000 | www.storhauginc.com

SHEET TITLE: LANDSCAPE SITE PLAN

PROJECT TITLE: WENDY'S PONDERAY, IDAHO

SEAL: STATE OF IDAHO, JOHN A. SIMONTON, LA-16070, LICENSED LANDSCAPE ARCHITECT

DATE	08/07/2020
DRAWN	JCS
CHECKED	
PROJECT NUMBER	20–190
DRAWING NO.	L1

LS SITE

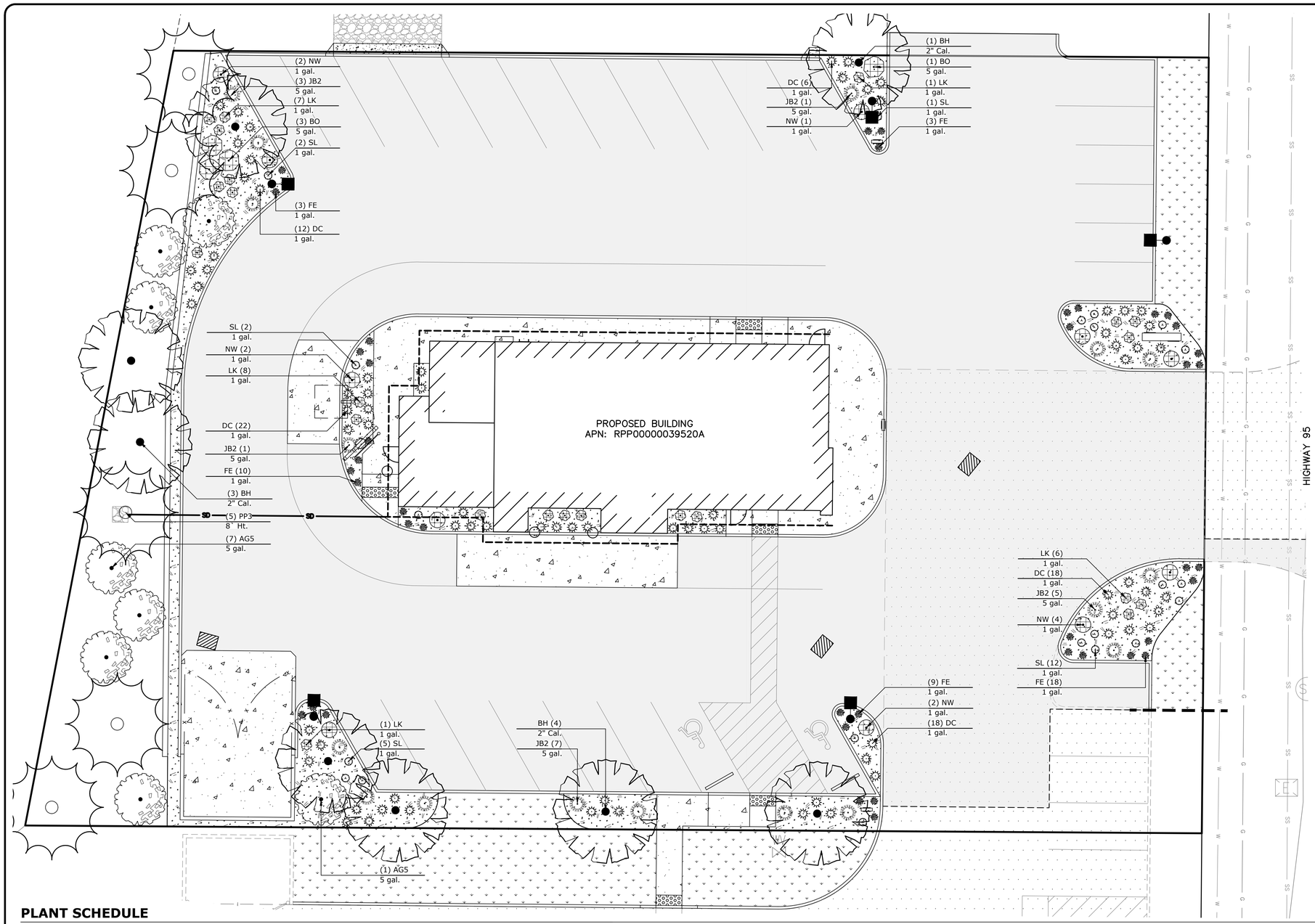

LANDSCAPE NOTES:

1. A QUALIFIED SUPERVISOR SHALL BE ON-SITE AT ALL TIMES FOR THE DURATION OF CONSTRUCTION.
2. ALL PLANT MATERIAL QUANTITIES SHALL BE VERIFIED PRIOR TO INSTALLATION. QUANTITIES LISTED IN SCHEDULES ARE FOR THE CONVENIENCE OF THE CONTRACTOR. THE NUMBER OF PLANTS SHOWN ON LANDSCAPE PLANS SHALL HAVE PRIORITY OVER THE NUMBER LISTED IN THE SCHEDULE.
3. ALL CONTAINER OR FIELD GROWN TREES, SHRUBS, VINES AND FLATTED GROUNDCOVERS SHALL BE PURCHASED BY THE CONTRACTOR. ALL SEEDED AND SOD TURF (INCLUDING HYDROMULCHES) SHALL BE PURCHASED BY THE CONTRACTOR. PAYING FOR THE PLANTING OF ALL PLANT MATERIALS; THE SPECIFIED GUARANTEE OF ALL PLANT MATERIALS; THE STAKING AND GUYING OF TREES AND THE CONTINUOUS PROTECTION OF ALL PLANT MATERIALS UPON THEIR ARRIVAL AT THE SITE SHALL BE THE RESPONSIBILITY OF THE CONTRACTOR.
4. GROUNDCOVER PLANTING UNDER TREES AND SHRUBS SHALL BE CONTINUOUS AS SHOWN ON PLANS.
5. ALL SPECIMEN TREES SHALL BE POSITIONED BY THE LANDSCAPE ARCHITECT AND/OR THE OWNER'S REPRESENTATIVE PRIOR TO PLANTING.
6. VINE RUNNERS TO BE INSTALLED WITH THE NURSERY STAKES REMOVED AND VINE RUNNERS ESPALIERED TO THE ADJACENT WALL OR FENCE.
8. ALL INSTALLED PLANT MATERIAL SHALL CONFORM TO THE CURRENT AMERICAN ASSOCIATION OF NURSERYMAN'S NATIONAL STANDARD SPECIFICATIONS.
9. ALL MATERIALS (PLANT MATERIALS, SOD, SEED, LANDSCAPE MULCHES, EDGING, ETC.) ARE SUBJECT TO APPROVAL BY THE LANDSCAPE ARCHITECT AND/OR OWNER PRIOR TO INSTALLATION.
10. ALL PLANT MATERIAL INSTALLED BY CONTRACTOR SHALL BE WARRANTED FOR ONE YEAR FROM DATE OF FINAL ACCEPTANCE. LANDSCAPE CONTRACTOR SHALL REMOVE AND REPLACE ALL DEAD AND/OR DYING PLANT MATERIAL (EXCEPT THOSE DUE TO VANDALISM OR NEGLECT) WITH PLANT MATERIAL EQUAL TO THE INSTALLED MATERIAL. GUARANTEE TO BE WRITTEN, DATED AND SIGNED BY CONTRACTOR ON CONTRACTOR'S LETTERHEAD.
11. CONTRACTOR TO INSTALL SOD IN ALL TURF AREAS UNLESS OTHERWISE NOTED.
12. CONTRACTOR TO PNEUMATICALLY APPLY (HYDROSEED) DRYLAND GRASS AREAS BETWEEN SEPTEMBER 15TH AND OCTOBER 1ST, OR MARCH 1ST AND APRIL 1ST .
13. CONTRACTOR TO PLACE TWO APPLICATIONS OF PRE-EMERGENT HERBICIDE (ABOVE AND BELOW) TOP DRESSING (MULCH) IN PLANTER BEDS; PRE-EMERGENT TO CONSIST OF +/-2% ACTIVE INGREDIENT (A-A-A TRIFLORD-2, 6-DINTRO-N, N-DIPROPYL-P-TOLUIDINE) & +/-98% INACTIVE INGREDIENT. "GREEN GOLD" BY LEBANON CHEMICAL OR APPROVED EQUAL.
14. CONTRACTOR TO INSTALL UV-RESISTANT POLYETHYLENE LANDSCAPE EDGING BETWEEN ALL TURF AND PLANTING BEDS UNLESS OTHERWISE NOTED. 'DANDY DIAMOND BY VALLEY VIEW, OR APPROVED EQUAL. EDGING SHALL END PERPENDICULARLY TO WALLS AND PAVING AND SHALL BE INSTALLED WITH TOP FLUSH WITH PAVING
15. CONTRACTOR TO PLACE A THREE INCH DEPTH OF FINE GRADE FIR/LARCH BARK IN PLANTER BEDS UNLESS OTHERWISE NOTED. COORDINATE WITH PRE-EMERGENT HERBICIDE APPLICATION AND/OR WEED FABRIC PLACEMENT.
16. NO SUBSTITUTIONS ARE PERMITTED WITHOUT THE WRITTEN CONSENT OF THE LANDSCAPE ARCHITECT.
17. OBSERVE THE FOLLOWING MINIMUM OFFSETS WHEN PLANTING TREES (UNLESS STATED OTHERWISE ON LANDSCAPE PLANS):
    - 15' FROM FIRE HYDRANTS AND UTILITY POLES
    - 25' FROM STREET LIGHTS
    - 15' FROM EDGE OF DRIVEWAYS
    - 5' FROM ALL UTILITY LINES
    - 10' FROM CURB INLETS
    - 20' FROM DRYWELLS

GRAPHIC SCALE

10 0 5 10 20

(IN FEET)
1 inch = 10 ft.

PLANT SCHEDULE

TREES	BOTANICAL NAME	COMMON NAME	SIZE	CONTAINER	QTY	DETAIL
BH	Betula nigra `Heritage`	Heritage River Birch	2" Cal.	B&B	8	
PP3	Pinus ponderosa	Ponderosa Pine	8` Ht.	B&B	5	

SHRUBS	BOTANICAL NAME	COMMON NAME	SIZE	CONTAINER	QTY	DETAIL
AG5	Amelanchier x grandiflora `Autumn Brilliance`	`Autumn Brilliance` Serviceberry	5 gal.	Pot	8	
BO	Berberis thunbergii `Orange Rocket`	Orange Rocket Barberry	5 gal.	Pot	4	
JB2	Juniperus squamata `Blue Star`	Blue Star Juniper	5 gal.	Pot	17	

ANNUALS/PERENNIALS	BOTANICAL NAME	COMMON NAME	SIZE	CONTAINER	QTY	DETAIL
LK	Liatris spicata `Kobold`	Spike Gayfeather	1 gal.	Pot	23	
NW	Nepeta x faassenii `Walkers Low`	Walkers Low Catmint	1 gal.	Pot	11	
SL	Solidago x `Little Lemon`	Little Lemon Goldenrod	1 gal.	Pot	22	

GRASSES	BOTANICAL NAME	COMMON NAME	SIZE	CONTAINER	QTY	DETAIL
DC	Deschampsia cespitosa `Northern Lights`	Northern Lights Hair Grass	1 gal.	Pot	76	
FE	Festuca glauca `Elijah Blue`	Blue Fescue	1 gal.	Pot	43	

20-190 LS SITE.dwg L2

CALL BEFORE YOU DIG 811

No.	DESC. / DATE	BY
5		
4		
3		
2		
1		

storhäug
civil engineering | planning
landscape architecture | surveying
510 east third avenue | spokane, wa | 99202
509.242.1000 | www.storhauginc.com

SHEET TITLE: LANDSCAPE PLANTING PLAN

PROJECT TITLE: WENDY'S PONDERAY, IDAHO

SEAL

STATE OF IDAHO
JAMES A. SCHMITT
LA-1670
LICENSED LANDSCAPE ARCHITECT

DATE	08/07/2020
DRAWN	JCS
CHECKED	
PROJECT NUMBER	20-190
DRAWING NO.	L2

LS PLANT

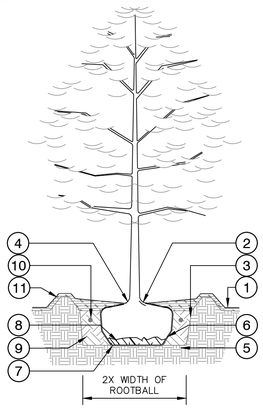

1. FINISH GRADE
2. INSPECT THE ROOT FLARE OF EACH TREE PRIOR TO PLANTING. TREES WITHOUT A VISIBLE ROOT FLARE WILL BE REJECTED
3. SCARIFY SIDES OF PLANT PIT PRIOR TO PLANTING
4. PLACE ROOT FLARE 1" ABOVE FINISH GRADE. DO NOT COVER ROOT FLARE WITH MULCH OR SOIL
5. UNDISTURBED SOIL
6. ROOTBALL
7. PLACE ROOTBALL ON UNDISTURBED SOIL TO PREVENT SETTLING
8. REMOVE WIRE AND BURLAPTO BOTTOM OF ROOTBALL AFTER SETTING IN PIT
9. BACKFILL SOIL MIX IN LIFTS (MAX. 9"). WATER TO SETTLE SOIL AND TAMP AROUND ROOTBALL LIGHTLY BETWEEN LIFTS WITH FOOT PRESSURE TO REMOVE AIR POCKETS AND PREVENT SHIFTING. ENSURE THAT PLANT POSITION IS PLUMB.
10. PLACE FERTILIZER TABLETS AT 3" BELOW FINISH GRADE AND ADJACENT TO ROOTBALL. FERTILIZER TO BE AGRIFORM (21 GRAM 20-10-5) OR EQ. USE 4 TABLETS PER 15 GAL TREE OR 1 PER 4" OF ROOTBALL DIAMETER.
11. CONSTRUCT EARTHEN SAUCER 2-1/2 TIMES THE ROOTBALL WIDTH AND NO MORE THAN 3" IN HEIGHT. TAPER MULCH DEPTH AT EARTHEN SAUCER.

NOTE: MULCH PER PLANS. IF MULCH DEPTH IS GREATER THAN 2", GRADUALLY FEATHER FROM SPECIFIED DEPTH TO 2" MAX. AT TREE ROOTBALL BASE TO PREVENT BURIED OR SUPER-ELEVATED PLANT INSTALLATION.

1 DECIDUOUS TREE PLANTING

NTS P-SE-PLA-05

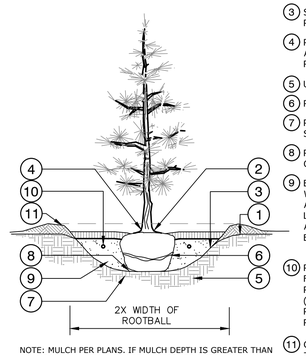

1. FINISH GRADE
2. INSPECT THE ROOT FLARE OF EACH TREE PRIOR TO PLANTING. TREES WITHOUT A VISIBLE ROOT FLARE WILL BE REJECTED
3. SCARIFY SIDES OF PLANT PIT PRIOR TO PLANTING
4. PLACE ROOT FLARE 1" ABOVE FINISH GRADE. DO NOT COVER ROOT FLARE WITH MULCH OR SOIL
5. UNDISTURBED SOIL
6. ROOTBALL
7. PLACE ROOTBALL ON UNDISTURBED SOIL TO PREVENT SETTLING
8. REMOVE WIRE AND BURLAPTO BOTTOM OF ROOTBALL AFTER SETTING IN PIT
9. BACKFILL SOIL MIX IN LIFTS (MAX. 9"). WATER TO SETTLE SOIL AND TAMP AROUND ROOTBALL LIGHTLY BETWEEN LIFTS WITH FOOT PRESSURE TO REMOVE AIR POCKETS AND PREVENT SHIFTING. ENSURE THAT PLANT POSITION IS PLUMB.
10. PLACE FERTILIZER TABLETS AT 3" BELOW FINISH GRADE AND ADJACENT TO ROOTBALL. FERTILIZER TO BE AGRIFORM (21 GRAM 20-10-5) OR EQ. USE 4 TABLETS PER 15 GAL TREE OR 1 PER 4" OF ROOTBALL DIAMETER.
11. CONSTRUCT EARTHEN SAUCER 2-1/2 TIMES THE ROOTBALL WIDTH AND NO MORE THAN 3" IN HEIGHT. TAPER MULCH DEPTH AT EARTHEN SAUCER.

NOTE: MULCH PER PLANS. IF MULCH DEPTH IS GREATER THAN 2", GRADUALLY FEATHER FROM SPECIFIED DEPTH TO 2" MAX. AT TREE ROOTBALL BASE TO PREVENT BURIED OR SUPER-ELEVATED PLANT INSTALLATION.

2 CONIFER TREE PLANTING

NTS P-SE-PLA-04

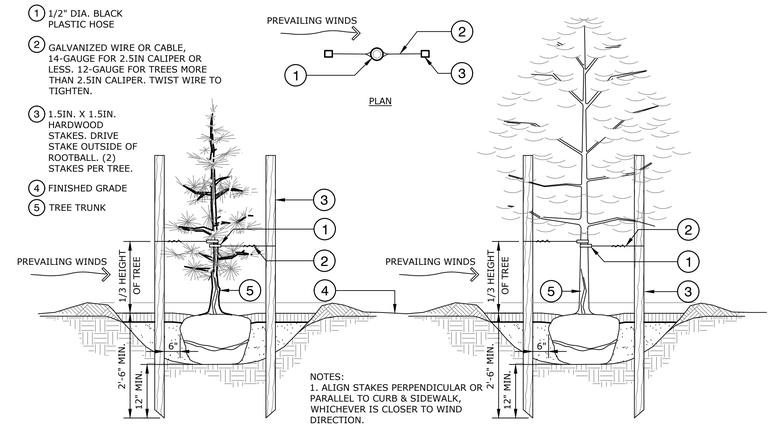

1. 1/2" DIA. BLACK PLASTIC HOSE
2. GALVANIZED WIRE OR CABLE, 14-GAUGE FOR 2.5IN CALIPER OR LESS. 12-GAUGE FOR TREES MORE THAN 2.5IN CALIPER. TWIST WIRE TO TIGHTEN.
3. 1.5IN. X 1.5IN. HARDWOOD STAKES. DRIVE STAKE OUTSIDE OF ROOTBALL. (2) STAKES PER TREE.
4. FINISHED GRADE
5. TREE TRUNK

NOTES:
1. ALIGN STAKES PERPENDICULAR OR PARALLEL TO CURB & SIDEWALK, WHICHEVER IS CLOSER TO WIND DIRECTION.
2. SEE PLANTING NOTES & SPECIFICATIONS (IF PROVIDED) FOR MORE INFORMATION

3 TREE STAKING

1" = 1'-0" P-SE-PLA-19

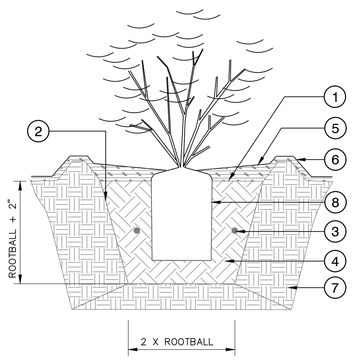

1. FINISHED GRADE
2. SCARIFY SIDES OF PLANT PIT PRIOR TO PLANTING
3. PLACE FERTILIZER TABLETS AT 1/2 ROOTBALL DEPTH
4. BACKFILL SOIL MIX IN MAX. 9" LIFTS. WATER TO SETTLE SOIL AND TAMP LIGHTLY AROUND ROOTBALL BETWEEN LIFTS TO REMOVE AIR POCKETS. ENSURE THAT PLANT POSITION IS PLUMB.
5. MULCH PER PLANS. IF MULCH DEPTH IS GREATER THAN 2", GRADUALLY FEATHER FROM SPECIFIED DEPTH TO 2" MAX. AT SHRUB ROOTBALL BASE TO PREVENT BURIED OR SUPER-ELEVATED PLANT INSTALLATION.
6. CONSTRUCT EARTHEN SAUCER 2-1/2 TIMES THE ROOTBALL WIDTH AND NO MORE THAN 3" IN HEIGHT. TAPER MULCH DEPTH AT EARTHEN SAUCER.
7. UNDISTURBED SOIL
8. ROOTBALL

4 SHRUB PLANTING DETAIL

1" = 1" P-SE-PLA-20

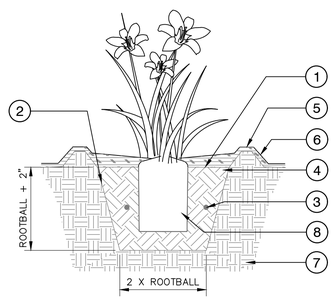

1. FINISHED GRADE
2. SCARIFY SIDES OF PLANT PIT PRIOR TO PLANTING
3. PLACE FERTILIZER TABLETS AT 1/2 ROOTBALL DEPTH
4. BACKFILL SOIL MIX IN MAX. 9" LIFTS. WATER TO SETTLE SOIL AND TAMP LIGHTLY AROUND ROOTBALL BETWEEN LIFTS TO REMOVE AIR POCKETS. ENSURE THAT PLANT POSITION IS PLUMB.
5. MULCH PER PLANS. IF MULCH DEPTH IS GREATER THAN 2", GRADUALLY FEATHER FROM SPECIFIED DEPTH TO 2" MAX. AT SHRUB ROOTBALL BASE TO PREVENT BURIED OR SUPER-ELEVATED PLANT INSTALLATION.
6. CONSTRUCT EARTHEN SAUCER 2-1/2 TIMES THE ROOTBALL WIDTH AND NO MORE THAN 3" IN HEIGHT. TAPER MULCH DEPTH AT EARTHEN SAUCER.
7. UNDISTURBED SOIL
8. ROOTBALL - LOOSEN BOUND ROOTS BEFORE PLANTING

5 PERENNIAL PLANTING DETAIL

NTS P-SE-PLA-13

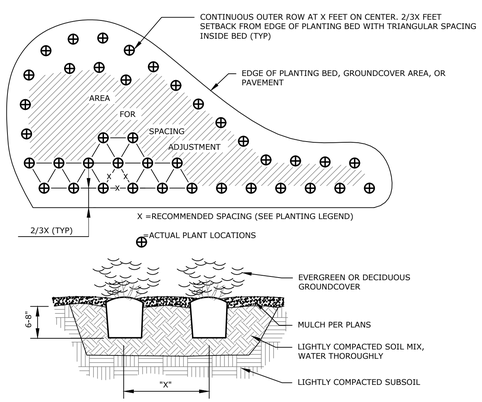

6 GROUNDCOVER PLANTING

1/4" = 1'-0" P-SE-PLA-03

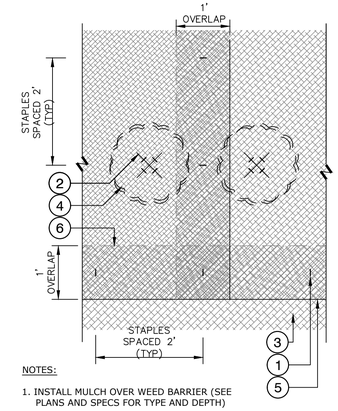

1. ANCHOR BARRIER TO SOIL USING 6" LONG 9-11 GA. STEEL LANDSCAPE STAPLES - SPACE STAPLES 2' OC ALONG JOINT OVERLAPS AND EVERY 4' IN ALL OTHER AREAS.
2. USING A RAZOR KNIFE, CUT AN 'X' IN THE FABRIC TO ACCOMODATE REMOVAL OF SOIL AND PLANT INSTALLATION. SECURE CUTS IN FABRIC WITH STAPLES AFTER INSTALLING PLANT.
3. WEED BARRIER FABRIC: SEE NOTES ON PLAN FOR SPECIFICATIONS ON FABRIC WEIGHT AND TYPE
4. PLANT OUTLINE (FOR ILLUSTRATIVE PUPROSES ONLY)
5. FABRIC EDGE (TOP)
6. FABRIC (BELOW)

NOTES:
1. INSTALL MULCH OVER WEED BARRIER (SEE PLANS AND SPECS FOR TYPE AND DEPTH)
2. COORDINATE FABRIC INSTALLATION WITH PRE-EMERGENT APPLICATION. SEE PLANS FOR MORE INFORMATION

7 WEED BARRIER INSTALLATION

P-SE-PLA-18

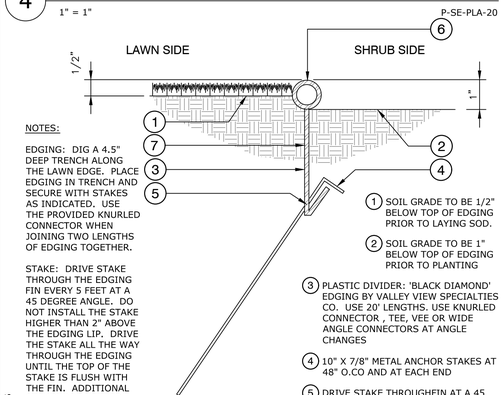

NOTES:

EDGING: DIG A 4.5" DEEP TRENCH ALONG THE LAWN EDGE. PLACE EDGING IN TRENCH AND SECURE WITH STAKES AS INDICATED. USE THE PROVIDED KNURLED CONNECTOR WHEN JOINING TWO LENGTHS OF EDGING TOGETHER.

STAKE: DRIVE STAKE THROUGH THE EDGING FIN EVERY 5 FEET AT A 45 DEGREE ANGLE. DO NOT INSTALL THE STAKE HIGHER THAN 2" ABOVE THE EDGING LIP. DRIVE THE STAKE ALL THE WAY THROUGH THE EDGING UNTIL THE TOP OF THE STAKE IS FLUSH WITH THE FIN. ADDITIONAL STAKES ARE NEEDED FOR TIGHT CURVES AND AT THE ENDS OF THE EDGING.

1. SOIL GRADE TO BE 1/2" BELOW TOP OF EDGING PRIOR TO LAYING SOD.
2. SOIL GRADE TO BE 1" BELOW TOP OF EDGING PRIOR TO PLANTING
3. PLASTIC DIVIDER: 'BLACK DIAMOND' EDGING BY VALLEY VIEW SPECIALTIES CO. USE 20' LENGTHS. USE KNURLED CONNECTOR , TEE, VEE OR WIDE ANGLE CONNECTORS AT ANGLE CHANGES
4. 10" X 7/8" METAL ANCHOR STAKES AT 48" O.CO AND AT EACH END
5. DRIVE STAKE THROUGHFIN AT A 45 DEG. ANGLE
6. 1" DIA. BEAD
7. EDGING SIDEWALL - .075 THICK

8 POLY EDGING DETAIL

NTS P-SE-EDG-02

1. SEED SHALL BE DELIVERED IN ORIGINAL, UNOPENED CONTAINERS SHOWING WEIGHT, CERTIFIED ANALYSIS, NAME AND ADDRESS OF MANUFACTURER, AND INDICATION OF CONFORMANCE WITH STATE AND FEDERAL LAWS, AS APPLICABLE.
2. CONTRACTOR TO BRING TO THE JOB SITE THE PACKING LIST FROM THE SEED SUPPLIER LISTING ALL THE SEED DELIVERED TO THE JOB SITE.
3. PROVIDE FRESH, CLEAN, NEW–CROP SEED COMPLYING WITH TOLERANCE OF PURITY AND GERMINATION ESTABLISHED BY THE OFFICIAL SEED ANALYSIS OF NORTH AMERICA. PROVIDE SEED MIXTURE COMPOSED OF GRASS SPECIES AND PERCENTAGES AS SPECIFIED BY SEED MANUFACTURER OR SUPPLIER.
4. PROVIDE MIXTURE COMPOSED OF GRASS AND FERTILIZER AS FOLLOWS:
   - 4.1. TURF MIX: "IDEAL TURF" FROM PLANTS OF THE WILD OR APPROVED EQUAL
   - DRYLAND MIX: "INLAND NORTHWEST NATIVE MIX" FROM PLANTS OF THE WILD OR APPROVED EQUAL.
5. FERTILIZER: PER SPECIFICATIONS
6. COORDINATE WITH CIVIL PLANS FOR STABILIZATION OF SLOPES TO RECEIVE HYDROSEED.
7. SEED SUPPLIER: PLANTS OF THE WILD, TEKOA WA 509–284–2848

9 HYDROSEED NOTES

NTS P-SE-TUR-10

CALL BEFORE YOU DIG 811

20–190 LS SITE.dwg L3

No.	DESC. / DATE	BY
5		
4		
3		
2		
1		

storhäug
civil engineering | planning
landscape architecture | surveying
510 east third avenue | spokane, wa | 99202
509.242.1000 | www.storhaugINC.com

SHEET TITLE: LANDSCAPE DETAILS

PROJECT TITLE: WENDY'S PONDERAY, IDAHO

SEAL

DATE	08/07/2020
DRAWN	JCS
CHECKED	
PROJECT NUMBER	20–190
DRAWING NO.	L3

LS DETAILS

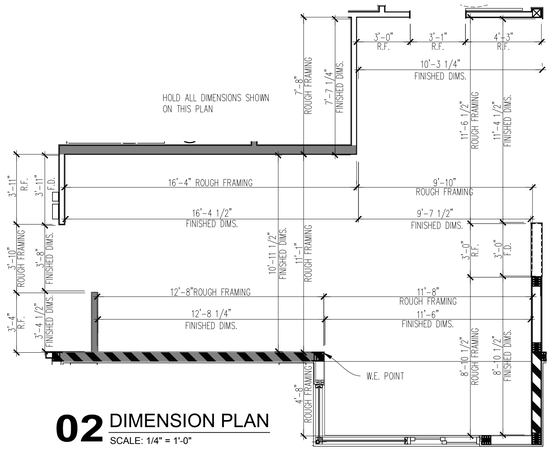

02 DIMENSION PLAN
SCALE: 1/4" = 1'-0"

CODED NOTES:

1. G.C. TO COORDINATE FINAL ROUGH FRAMING DIMENSIONS W/ ELECTRIC FIREPLACE SPECIFICATIONS.
2. APPROXIMATE LOCATION OF FRONT COUNTER. REF. SHEET A5.1 FOR LOCATIONS.
3. G.C. TO INSTALL STAINLESS STEEL CORNER GUARD, REFER TO EQUIPMENT PLAN SHEET FOR LOCATIONS AND TYPE OF CORNER GUARDS.
4. SAFETY RAILING, REFER TO CIVIL DRAWINGS.
5. ROOF PARAPET OVERHANG ABOVE. REFER TO ROOF PLAN AND EXTERIOR ELEVATIONS FOR ADDITIONAL INFORMATION.
6. ALIGN FINISHES
7. SOFFIT / BULKHEAD / COVE LIGHT ABOVE, REFER TO REFLECTED CEILING PLAN.
8. 6" DIA. METAL PIPE BOLLARD FILLED W/ CONCRETE COVERED WITH BOLLARD SLEEVE. INSTALL BOLLARD 1" CLEAR OF WALL FINISHES, REFER TO CIVIL DRAWINGS.
9. ROOF ACCESS LADDER RECEIVER.
10. RECESSED MOP SINK, INSTALL WATERPROOF MEMBRANE IN MOP SINK RECESS TO TIE INTO DRAIN AND WRAP UP WALLS 12" OR ON TO FLOOR 12". SET MOP SINK EDGE IN SEALANT ON TILE FLOOR. REFER TO DETAIL 02/A5.1.
11. TYPE 1 EXHAUST HOOD, REFER TO MECHANICAL DRAWINGS.
12. PROVIDE AND INSTALL STAINLESS STEEL PANELS BEHIND AND BESIDES FRYERS. REFER TO INTERIOR ELEVATIONS.
13. SHADED AREA INDICATES EXTENTS OF METAL STUD FRAMED WALL W/ MINERAL WOOL RIGID INSULATION.
14. EQUIPMENT CURB BY KITCHEN VENDOR. REF. SHEET A5.1 FOR LOCATIONS.
15. CONCRETE CURB. REFER TO SECTIONS AND STRUCTURAL DRAWINGS.
16. PARTIAL HEIGHT WALL 4'-8" A.F.F. , REFER TO INTERIOR ELEVATIONS.
17. CLOSURE TRIM / ANGLES BY GC.
18. AWNING / CANOPY ABOVE.
19. FIRE EXTINGUISHER CABINET, GC TO PROVIDE AND INSTALL. REFER TO INTERIOR ELEVATIONS.
20. 6" CONCRETE CURB FOR ELECTRICAL PANELS. EXPOSED SIDES TO BE 1/2" LESS THAN ELECTRICAL PANELS, REF. DETAILS 03/A1.1 AND 01/A5.2.
21. ELECTRICAL PANEL FLOOR CLEARANCE
22. FACE OF WALL ABOVE.
23. LOCATION OF RECESSED JUNCTION BOX FOR FUTURE CUSTOMER ORDER SCREEN AND WFI COMMUNITY TABLE. REF. ELECTRICAL DRAWINGS
24. GREASE TANK AND CO2 TANK ENCLOSURE SUPPLIED BY OTHERS.
25. DOWNSPOUT, REF. EXTERIOR ELEVATIONS.
26. HOT WATER TANK ON SHELF.
27. HATCHED AREA INDICATES SHEAR WALL, REF. STRUCTURAL DRAWINGS. COORDINATE FINISHES WITH NUM. OF PLIES PROVIDED. EXTEND PLYWOOD AS REQUIRED TO MAINTAIN FINISH PLANE.
28. ~~PROVIDE FURRING FOR EXTENT SHOWN.~~
29. ALCOVE FOR RECESSED PREVIEW BOARDS ONLY IF DIGITAL BOARDS ARE INSTALLED. REFER TO SECTION 04/A3.4
30. WALK-IN MANUFACTURER TO PROVIDE REINFORCED FRAMED OPENING FOR DOOR AS SCHEDULED.
31. BUILT UP POST. REFER TO STRUCTURAL DRAWINGS..

GENERAL NOTES

A. EXTERIOR DIMENSIONS ARE FROM FACE OF SHEATHING TO FACE OF SHEATHING U.N.O. INTERIOR DIMENSIONS ARE TO FACE OF STUD U.N.O.

B. COORDINATE CURB CUTS AT DOORS WITH STOREFRONT MANUFACTURER PRODUCT DETAILS AND SHOP DRAWINGS.

C. EXTERIOR FINISHES ARE NOTED ON EXTERIOR ELEVATIONS.

D. SEE FINISH PLAN AND INTERIOR ELEVATIONS FOR EXTENT OF INTERIOR FINISHES.

E. THE CONTRACTOR SHALL PROVIDE AND INSTALL SOLID WOOD BLOCKING FOR WALL MOUNTED ITEMS, EQUIPMENT, MILLWORK, ETC. COORDINATE LOCATIONS WITH OWNER'S CONSTRUCTION REPRESENTATIVE AS NECESSARY.

F. REFER TO WALL TYPES ON SHEET A4.3

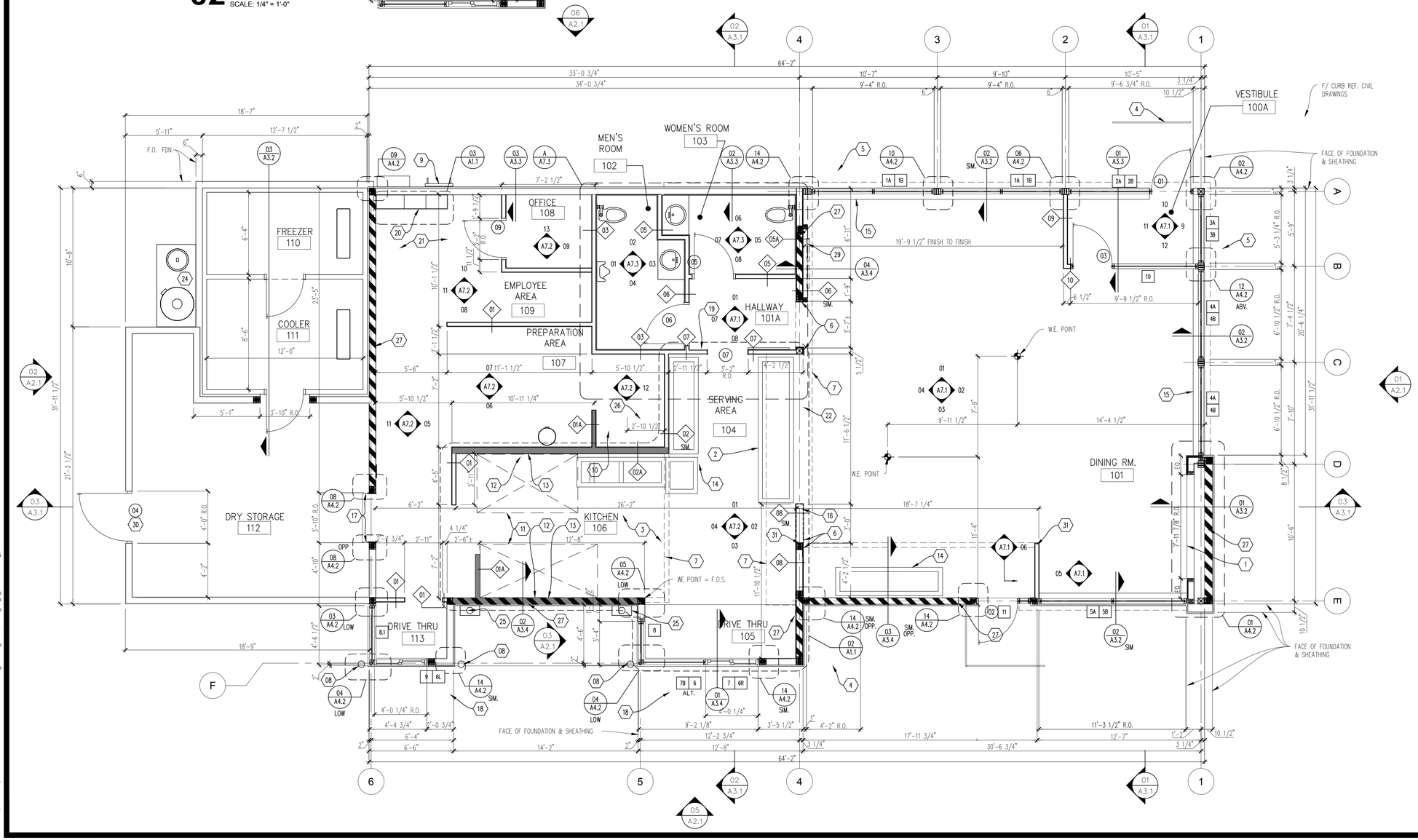

01 FLOOR PLAN
SCALE: 1/4" = 1'-0"

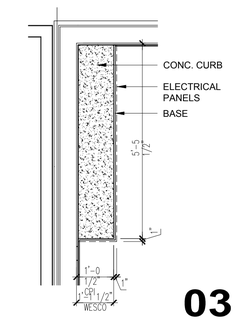

03 PLAN DETAIL
SCALE: NTS

SITE NUMBER:	12281
BASE MDL:	SMART 55 - SQUARE 2017
ASSET TYPE:	FRANCHISEE
CLASSIFICATION:	NEW
OWNER:	WENSPOK
BASE VERSION:	2017
UPGRADE CLASSIFICATION:	NEW BUILD
PROJECT YEAR:	2020
FURNITURE PACKAGE:	2016 V3
DRAWING RELEASE	JANUARY 2020

Russell C. Page ARCHITECTS
204 N. Division Street, Suite 'E'
Spokane, WA 99202
(509) 467-9748 Fx: (509) 467-9817

PROJECT TYPE: NEW
SMART 55 SQE

Wendy's
HIGHWAY 95
PONDERAY, ID 83852

REV.	DATE	DESCRIPTION
△		
△		

ISSUE DATE: 5-28-2020
PROJECT NUMBER: 20-113
DRAWN BY: MEXXX
CHECKED BY: XXX

SEAL
LICENSED ARCHITECT AR 984311
RUSSELL C. PAGE
STATE OF IDAHO

SHEET NAME
FLOOR PLAN

SHEET NUMBER
A1.1

8/10/2020, 10:08 AM N:\Home\20-113 WENDYS PONDERAY\50_SMART_55-SQUARE_A1_1_Floor Plan.dwg, user

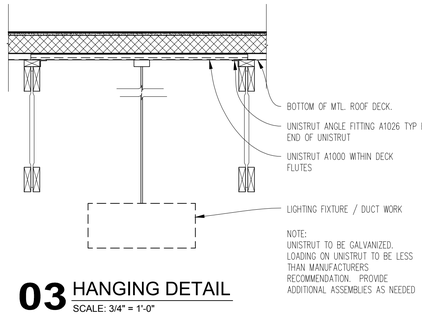

03 HANGING DETAIL
SCALE: 3/4" = 1'-0"

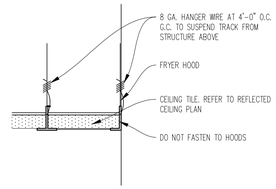

02 CEILING DETAIL @ FRYER HOOD
SCALE: 3/4" = 1'-0"

REFLECTED CEILIING CODED NOTES:

1. EXPOSED STRUCTURAL JOIST. TOP AND BOTTOM CHORDS TO BE STAIN COATED "P-8". SEE STRUCTURAL DRAWINGS AND FINISH SCHEDULE
2. PROVIDE CONTINUOUS UPLIGHT AT WALL MURAL. REFER TO ELECTRICAL DRAWINGS.
3. PENDANT TRACK LIGHTS TO BE CENTERED OVER BOOTH SEATING BELOW. BOTTOM OF PENDANT LIGHT FIXTURES TO BE MOUNTED AT 7'-0" A.F.F. REFER TO ELECTRICAL DRAWINGS.
4. LIGHT FIXTURES ABOVE PICK UP WINDOW. REFER TO ELECTRICAL DRAWINGS.
5. GYPSUM BOARD SOFFIT.
6. STATIC MENU BOARD. REFER TO ELECTRICAL DRAWINGS.
7. EXHAUST HOODS. REFER TO MECHANICAL DRAWINGS. REFER TO ARCHITECTURAL REFLECTED CEILING PLAN FOR HOOD LOCATION.
8. FOR PRE-FABRICATED COOLER / FREEZER / STORAGE UNITS, THE COOLER / FREEZER / DRY STORAGE GC PROVIDES AND INSTALLS LIGHTING FOR THE UNITS. FOR SITE ERECTED COOLER / FREEZER / STORAGE UNITS, THE GC PROVIDES & INSTALLS LIGHTING.
9. REFER TO EXTERIOR ELEVATIONS FOR MOUNTING HEIGHTS/DIMENSIONS OF WALL MOUNTED LIGHT FIXTURES (TYP.).
10. EMERGENCY FLOOD LIGHT TO BE SUSPENDED FROM BOTTOM OF STRUCTURE.
11. EXPOSED MECHANICAL DUCTWORK ABOVE. DUCTWORK NOT TO BE PAINTED SEE MECHANICAL DRAWINGS FOR ADDITIONAL INFORMATION. CENTER OF DUCTWORK AT 11'-0" A.F.F.
12. SUSPENDED SEMI-INDIRECT LIGHTING, BOTTOM OF FIXTURE TO BE MOUNTED AT 10'-5" A.F.F. SEE ELECTRICAL SHEETS.
13. CHASE EQUIPMENT.
14. EXTEND GYP. BD. TIGHT TO DECK ABOVE.
15. ADJUST WALL WASH CAN LIGHT FIXTURE TO ILLUMINATE WALL MOUNTED SIGNAGE BELOW.
16. DASHED LINE INDICATES FACE OF WALL ABOVE LIGHT COVE.
17. PROVIDE ALCOVE WHEN DIGITAL PREVIEW BOARDS ARE INSTALLED, REF. DETAILS.
18. EMERGENCY FLOOD LIGHT TO BE MOUNTED AT 8'-8" A.F.F. TO BOTTOM OF SOFFIT. REFER TO ELECTRICAL DRAWINGS.
19. CEILING/WALL MOUNTED EMERGENCY FLOOD LIGHT TO BE MOUNTED AT 8'-10" A.F.F. REFER TO ELECTRICAL DRAWINGS.
20. CEILING/WALL MOUNTED EMERGENCY FLOOD LIGHT TO BE MOUNTED AT 9'-4" A.F.F. REFER TO ELECTRICAL DRAWINGS.
21. CEILING/WALL MOUNTED EMERGENCY FLOOD LIGHT TO BE MOUNTED AT 8'-8" A.F.F. REFER TO ELECTRICAL DRAWINGS.
22. LED TAPE LIGHT AT CORNICE/PARAPET CAP. REFER TO ELECTRICAL DRAWINGS.

GENERAL NOTES

A. HOLD DOWN CLIPS SHALL BE PROVIDED FOR ALL CEILING TILES IN THE VESTIBULES.

B. SEE INTERIOR FINISH SCHEDULE FOR CEILING TILE.

C. DO NOT SCREW THE CEILING GRID TO THE STAINLESS STEEL HOODS. USE DOUBLE-FACED TAPE.

D. REFER TO ELECTRICAL AND/OR HVAC DRAWINGS FOR ADDITIONAL INFORMATION REGARDING ALL FIXTURES, DEVICES AND EQUIPMENT SHOWN ON THIS PLAN.

E. VERIFY CONFIGURATION OF MUSIC SYSTEM IN DINING ROOM. COORDINATE REQUIREMENTS WITH WENDY'S IT CONTACT.

F. VERIFY CONFIGURATION OF WIFI SYSTEM. COORDINATE REQUIREMENTS WITH WENDY'S IT CONTACT.

G. ALL HANGING ITEMS NEEDING SUPPORT BETWEEN ROOF JOISTS SHALL BE SUSPENDED FROM GALVANIZED UNISTRUT IN ROOF DECK FLUTES.

LEGEND

- LED LIGHTING FIXTURE
- LED LIGHTING FIXTURE
- 24x48 SUSPENDED CEILING TILE (WASHABLE) CT-1
- CEILING GRID AND ACT (CT-2)
- 24x24 SUSPENDED CEILING TILE. (WASHABLE) CT-4
- CEILING GRID AND WASHABLE, NON-COMBUSTIBLE CLG. TILE (CT-5)
- EXIT LIGHT FIXTURE
- X'-X" CEILING MOUNTED LIGHT TRACK
- SUSPENDED LIGHT FIXTURE
- OR RECESSED OR WALL WASH CAN LIGHT FIXTURE
- WALL MOUNTED LIGHT FIXTURE
- SUPPLY AIR DIFFUSER
- SUPPLY AIR DIFFUSER (AT HOOD LOCATIONS)
- RETURN AIR DIFFUSER
- CEILING/WALL MOUNTED EMERGENCY FLOOD LIGHT
- EXTERIOR REMOTE EMERGENCY FLOOD LIGHT
- CEILING/WALL MOUNTED EMERGENCY EXIT FLOOD LIGHT
- S CEILING SPEAKER

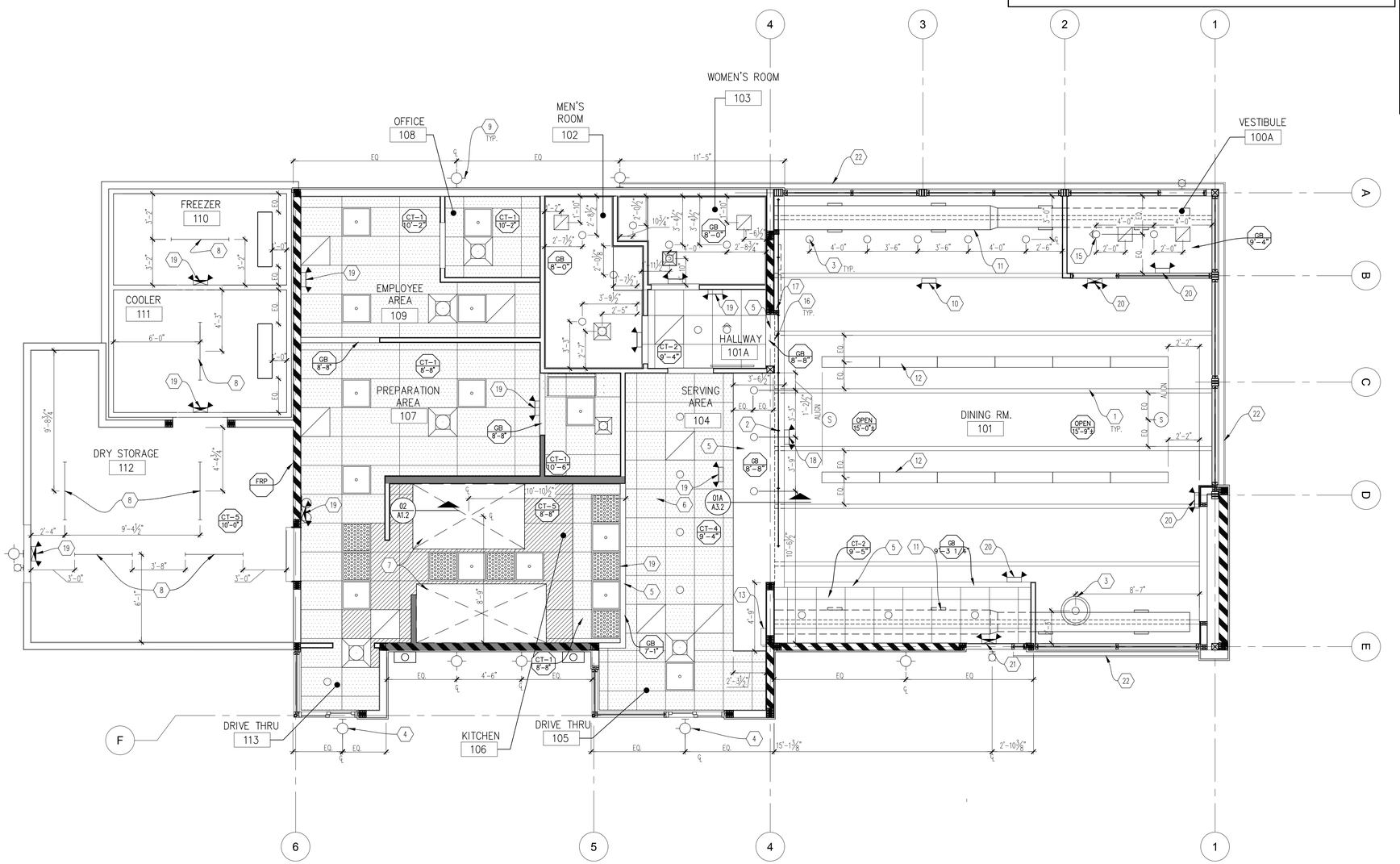

01 REFLECTED CEILING PLAN
SCALE: 1/4" = 1'-0"

SITE NUMBER:	12281
BASE MDL:	SMART 55 - SQUARE 2017
ASSET TYPE:	FRANCHISEE
CLASSIFICATION:	NEW
OWNER:	WENSPOK
BASE VERSION:	2017
UPGRADE CLASSIFICATION:	NEW BUILD
PROJECT YEAR:	2020
FURNITURE PACKAGE:	2016 V3
DRAWING RELEASE	JANUARY 2020

Russell C. Page ARCHITECTS
204 N. Division Street, Suite 'E'
Spokane, WA 99202
(509) 467-9748 Fx: (509) 467-9817

PROJECT TYPE: NEW
SMART 55 SQE

Wendy's
HIGHWAY 95
PONDERAY, ID 83852

REV.	DATE	DESCRIPTION
△		
△		

ISSUE DATE: 5-28-2020
PROJECT NUMBER: 20-113
DRAWN BY: MEXXX
CHECKED BY: XXX

SEAL

LICENSED ARCHITECT AR 98431
8/10/2020
RUSSELL C. PAGE
STATE OF IDAHO

SHEET NAME
REFLECTED CEILING PLAN
-HALTON HOOD OPTION-

SHEET NUMBER
A1.2

8/10/2020, 10:08 AM, N:\Home\20-113 WENDYS PONDERAY\30_SMART_55-SQUARE_A1_2_Reflected Ceiling Plan.dwg, user

CALCULATED ROOF AREA:

HORIZONTAL ROOF AREA (S.F.)	= 2,259
VERTICAL SURFACE 50% AREA (S.F.)	= 316
TOTAL PROJECTED ROOF AREA (S.F.)	= 2,575 S.F.

DRAINAGE CALCULATIONS:

(SIZE OF VERTICAL CONDUCTORS & LEADERS)

25 YEAR, 1-HOUR RAINFALL (IN.)	= 2.5"
REQUIRED VERTICAL LEADER SIZE (ROUND)	= 3" DIA.
(OR RECTANGULAR SHAPE)	= 2¾"x4¾"
SPECIFIED LEADER CAPACITY (SINGLE)	= 2,930 S.F.
REQUIRED OVERFLOW SCUPPER SIZE (SINGLE)	= 4"x4" MIN.
VERTICAL LEADER (X2) CAPACITY PROVIDED	= 5,860 S.F.

GENERAL NOTES

A. ROOF WORK TO BE INSTALLED WITH COMPATIBLE WENDY'S APPROVED ROOF MATERIAL SPECIFICATIONS. PROVIDE AND INSTALL ROOF INCLUDING BUT NOT LIMITED TO, INSULATION BOARD, EDGE FLASHING(S) COPINGS, SEALED TERMINATIONS AS REQUIRED BY THE MANUFACTURER'S INSTALLATION INSTRUCTIONS AND SPECIFICATIONS. AT PENETRATIONS/ ATTACHMENTS IN THE ROOF, FLASH/ PROVIDE WEATHER TIGHT SEAL PER ROOFING SYSTEM MANUFACTURER'S WARRANTY REQUIREMENTS. METHOD AND HARDWARE FOR ATTACHMENTS TO STRUCTURE TO BE REVIEWED AND VERIFIED BY A.O.R. UPON COMPLETION THE ROOFING CONTRACTOR SHALL ENSURE THE ENTIRE ROOF SHALL BE WEATHER AND WATER TIGHT WITH POSITIVE DRAINAGE TO THE ROOF DRAINS AND NO PONDING.

B. ROOFING CONTRACTOR SHALL INSTALL RIGID INSULATION (PER LOCAL ENERGY CODE) AND PRIOR TO MEMBRANE INSTALLATION. SYSTEM TO BE COMPLETE WITH ALL ACCEPTABLE PRODUCTS AND INSTALLATION REQUIRED TO PROVIDE A FULL MANUFACTURER'S WARRANTY.

C. CORRUGATED METAL ROOF DECK IS TO BE INSTALLED WITH INTERIOR LAP SEAMS AT TOP OF TRUSS CORDS CONCEALING SEAMS FROM VIEW IN DINING AREA.

OPTIONAL ROOF SCREENS:

CITYSCAPES UNIT-MOUNTED VERTICAL ROOF SCREEN SYSTEM WITH LOUVER PANELS, 'STEP 2' TOP TRIM. COLOR: MANSARD BROWN.

WWW.CITYSCAPESINC.COM

REFLECTED CEILIING CODED NOTES:

1. LINE OF EXTERIOR WALL BELOW.
2. ROOF DRAIN WITH OVERFLOW. REFER TO DETAIL 11/A4.4.
3. NOT USED.
4. EXTEND SINGLE-PLY MEMBRANE ROOF TO TERMINATION BAR UNDER COUNTER FLASHING TO PROVIDE WEATHER TIGHT SEAL. SEE DETAIL 09/A4.4.
5. EXTERIOR WALK-IN COOLER/FREEZER/DRY STORAGE UNIT SUPPLIED AND INSTALLED BY OTHERS. WALK IN BOX PROVIDER IS RESPONSIBLE FOR INSTALLING ROOFING SYSTEM ON PANELIZED COOLER / FREEZER SYSTEM.
6. PROVIDE POSITIVE DRAINAGE AROUND ALL ROOF CURBS.
7. INSTALL PIPE FLASHING FOR ROOF MOUNTED CONDENSERS LINES. REFER TO DETAIL 04/A4.4
8. ICE MACHINE CONDENSER FOR DINING ROOM FREESTYLE MACHINE(S). SUPPLIED AND INSTALLED BY KED.
9. KITCHEN ICE MACHINE CONDENSER. SUPPLIED AND INSTALLED BY KED.
10. ROOF DRAIN OVERFLOW OUTLET. SEE EXTERIOR ELEVATIONS.
11. PROVIDE 2'-0" x 2'-0" METAL ACCESS PANEL AT BACK SIDE OF BLADE, PAINTED TO MATCH BLADE FINISH. SEE ELEVATION.
12. MECHANICAL FASTEN SINGLE-PLY ROOF MEMBRANE OVER CONTINUOUS RIGID BOARD INSULATION WHERE INSTALLED OVER PLYWOOD SHEATHING.
13. PLUMBING VENT PIPE. REFER TO DETAIL 10/A4.4 FOR REQUIRED FLASHING REQUIREMENTS
14. WALK-IN FREEZER / REFRIGERATOR REMOTE CONDENSER SUPPLIED AND INSTALLED BY COOLER MANUFACTURER. CC PROVIDES FINAL HOOK UP. REFER TO MECHANICAL DRAWINGS.
15. LADDER RECEIVER/HOOK & SAFETY GATE FOR ROOF ACCESS. REFER TO DETAIL 01/A4.4.
16. EXTEND ROOF MEMBRANE UP/OVER PARAPET & FLASH TO PRE-FINISHED ALUMINUM ROOF DRIP EDGE OR GRAVEL STOP. SEE WALL SECTIONS.
17. NOT USED.
18. NOT USED.
19. ROOF WALKWAY PAD.
20. ROOF CURB PROVIDED WITH HOOD PACKAGE. EXHAUST FAN IS PROVIDED W/ HINGED COVER. LOCATE HINGED COVER TO ALLOW UNOBSTRUCTED OPENING OF THE EXHAUST DUCTWORK. SEE MECHANICAL DRAWINGS.
21. PRE-FINISHED ALUMINUM DRIP EDGE, SEE WALL SECTIONS.
22. TAPERED INSULATION. REFER TO INSTALLATION DETAILS BY MANUFACTURER.
23. GLUE DOWN SINGLE-PLY ROOF MEMBRANE OVER GLUE DOWN CONTINUOUS RIGID INSULATION WHRE INSTALLED OVER METAL DECK.
24. COOK CENTER CONDENSER. SUPPLIED AND INSTALLED BY KED.
25. SATELLITE DISH AND ROOF MOUNT. REF. STRUCTURAL 05/S2.3
26. DASHED LINE INDICATES CLEAR AREA REQUIRED FOR THE HVAC UNIT AIR INTAKE, LOCATE ALL EXHAUST AIR DEVICES OUTSIDE OF 10'-0" RADIUS (TYP).
27. LOCATION OF ICE MACHINE CONDENSER FOR OPTIONAL DINING ROOM FREESTYLE

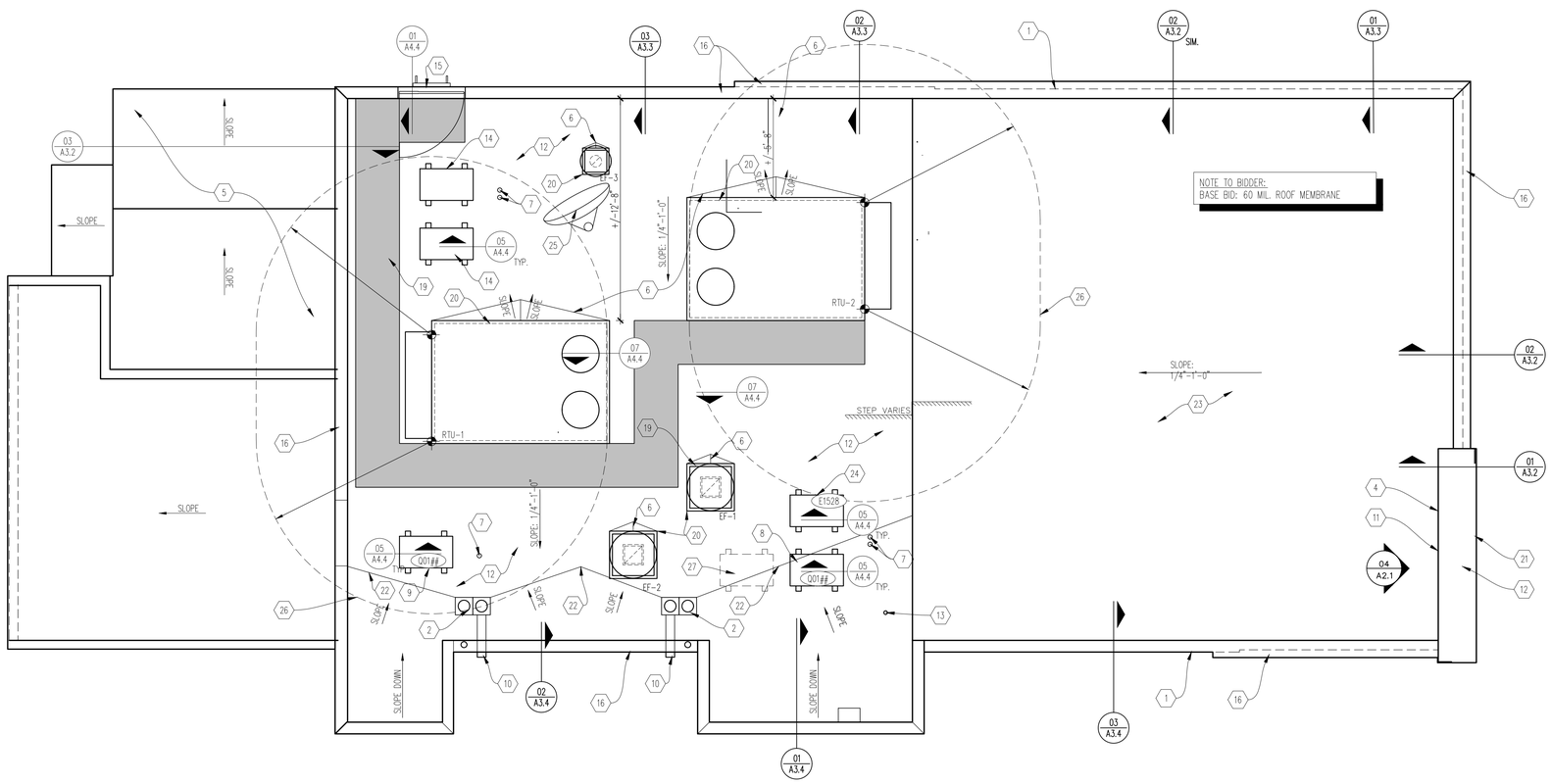

01 ROOF PLAN
SCALE: 1/4" = 1'-0"

SITE NUMBER:	12281
BASE MDL:	SMART 55 - SQUARE 2017
ASSET TYPE:	FRANCHISEE
CLASSIFICATION:	NEW
OWNER:	WENSPOK
BASE VERSION:	2017
UPGRADE CLASSIFICATION:	NEW BUILD
PROJECT YEAR:	2020
FURNITURE PACKAGE:	2016 V3
DRAWING RELEASE	JANUARY 2020

Russell C. Page ARCHITECTS
204 N. Division Street, Suite 'E'
Spokane, WA 99202
(509) 467-9748 Fx: (509) 467-9817

PROJECT TYPE: NEW
SMART 55 SQE

Wendy's.
HIGHWAY 95
PONDERAY, ID 83852

REV.	DATE	DESCRIPTION
△		
△		

ISSUE DATE: 5-28-2020
PROJECT NUMBER: 20-113
DRAWN BY: MD XXX
CHECKED BY: XXX

SEAL

LICENSED ARCHITECT AR 984311
8/10/2020
RUSSELL C. PAGE
STATE OF IDAHO

SHEET NAME
ROOF PLAN

SHEET NUMBER
A1.3

8/10/2020, 10:27 AM, N:\Home\20-113 WENDYS PONDERAY\30_SMART_55-SQUARE_A1_3_Roof Plan.dwg, user

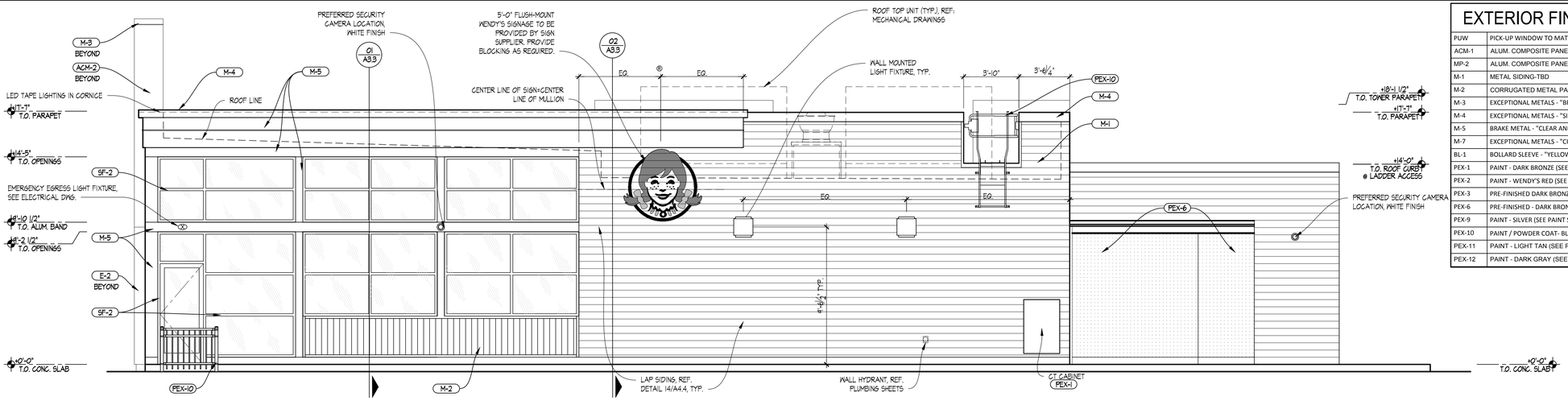

06 VESTIBULE SIDE ELEVATION
SCALE

EXTERIOR FINISHES LEGEND	
PUW	PICK-UP WINDOW TO MATCH STOREFRONT
ACM-1	ALUM. COMPOSITE PANEL (OR EQUIVALENT)- "DARK GREY"
MP-2	ALUM. COMPOSITE PANEL (OR EQUIVALENT" - " BRIGHT RED"
M-1	METAL SIDING-TBD
M-2	CORRUGATED METAL PANEL - "ALUMINUM" / "CLEAR ANODIZED"
M-3	EXCEPTIONAL METALS - "BRIGHT RED"
M-4	EXCEPTIONAL METALS - "SILVER METALLIC"
M-5	BRAKE METAL - "CLEAR ANNODIZED"
M-7	EXCEPTIONAL METALS - "CUSTOM DARK GREY"
BL-1	BOLLARD SLEEVE - "YELLOW"
PEX-1	PAINT - DARK BRONZE (SEE PAINT SCHEDULE)
PEX-2	PAINT - WENDY'S RED (SEE PAINT SCHEDULE)
PEX-3	PRE-FINISHED DARK BRONZE SIGN CABINETS (SEE PAINT SCHEDULE)
PEX-6	PRE-FINISHED - DARK BRONZE (SEE PAINT SCHEDULE)
PEX-9	PAINT - SILVER (SEE PAINT SCHEDULE)
PEX-10	PAINT / POWDER COAT- BLACK (SEE PAINT SCHEDULE)
PEX-11	PAINT - LIGHT TAN (SEE PAINT SCHEDULE)
PEX-12	PAINT - DARK GRAY (SEE PAINT SCHEDULE)

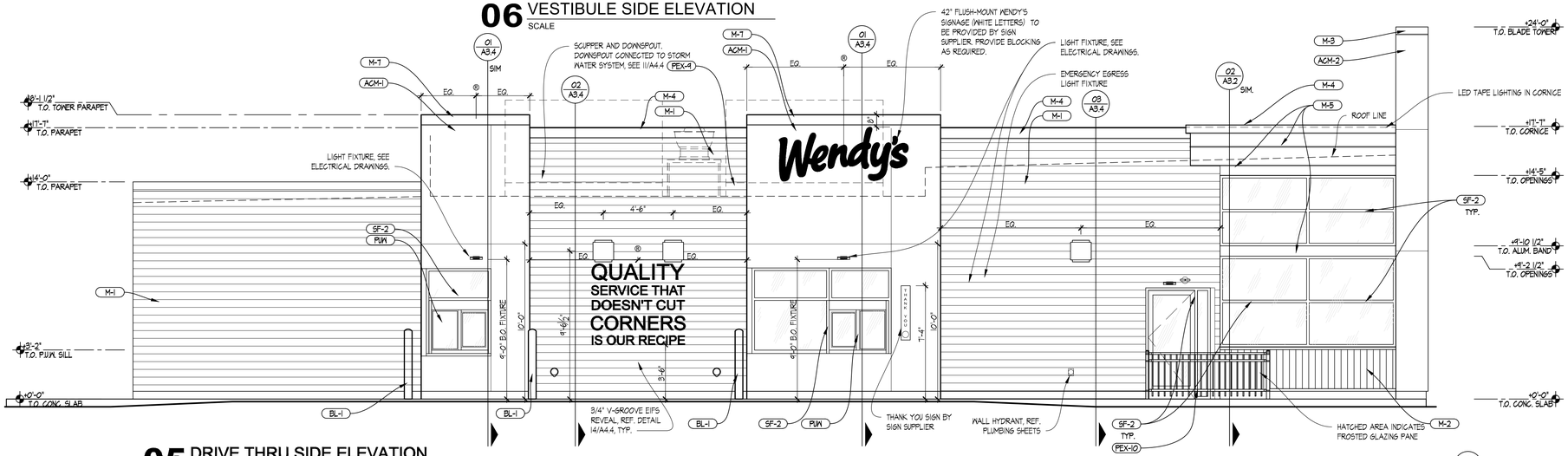

05 DRIVE THRU SIDE ELEVATION
SCALE

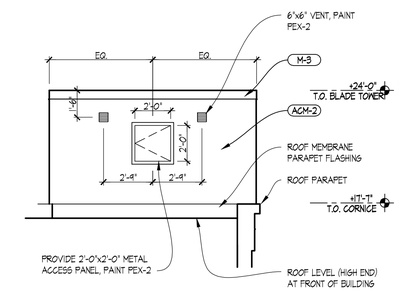

04 BLADE WALL DETAIL
SCALE

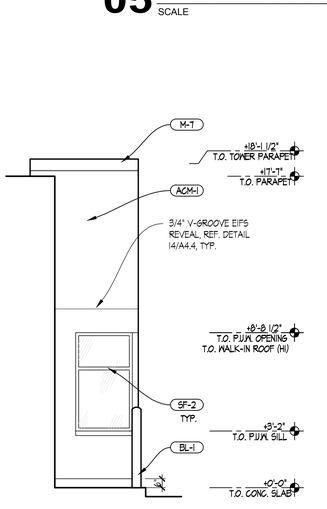

03 REAR DRIVE THRU ELEVATION
SCALE

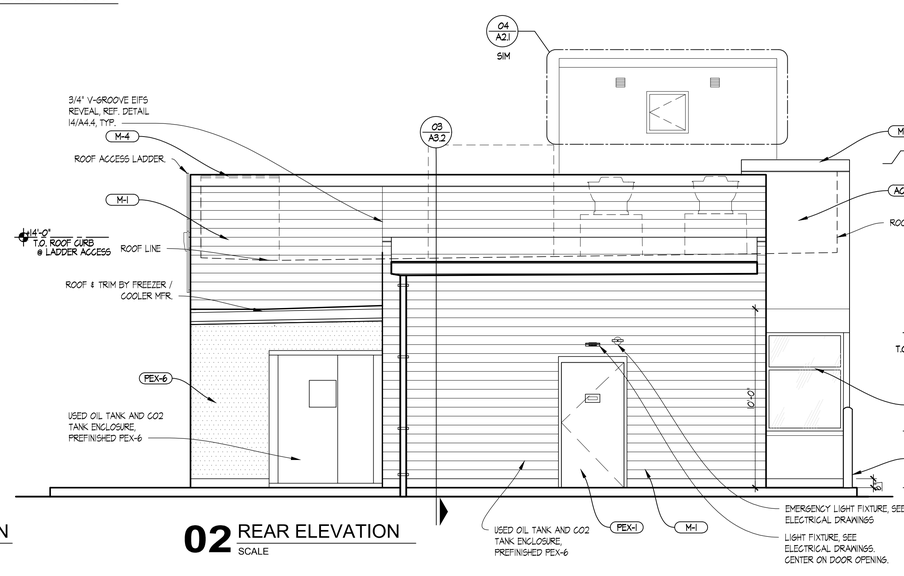

02 REAR ELEVATION
SCALE

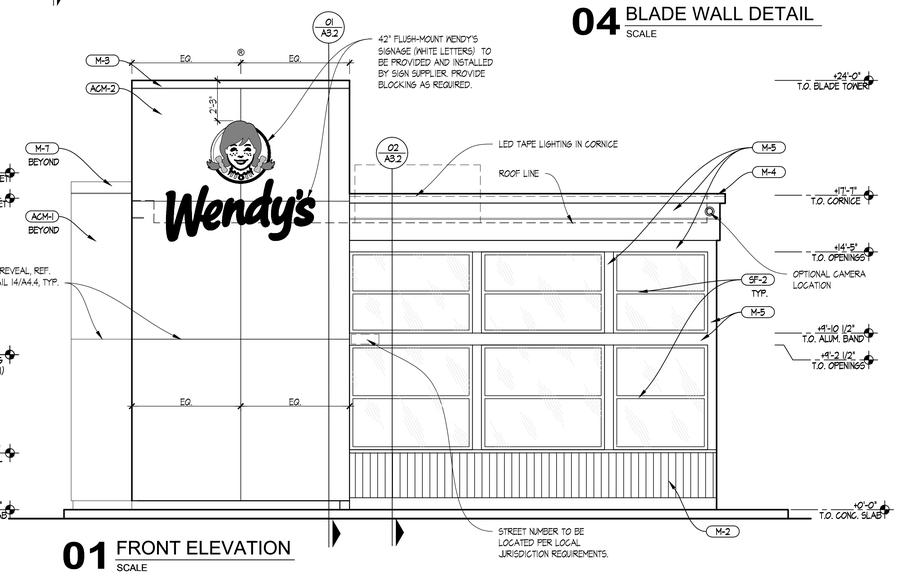

01 FRONT ELEVATION
SCALE

SITE NUMBER:	12281
BASE MDL:	SMART 55 - SQUARE 2017
ASSET TYPE:	FRANCHISEE
CLASSIFICATION:	NEW
OWNER:	WENSPOK
BASE VERSION:	2017
UPGRADE CLASSIFICATION:	NEW BUILD
PROJECT YEAR:	2020
FURNITURE PACKAGE:	2016 V3
DRAWING RELEASE	JANUARY 2020

Russell C. Page ARCHITECTS
204 N. Division Street, Suite 'E'
Spokane, WA 99202
(509) 467-9748 Fx: (509) 467-9817

PROJECT TYPE: NEW SMART 55 SQE

Wendy's
HIGHWAY 95
PONDERAY, ID 83852

REV.	DATE	DESCRIPTION

ISSUE DATE: 5-28-2020

PROJECT NUMBER: 20-113

DRAWN BY: MD/XXX

CHECKED BY: XXX

SEAL

LICENSED ARCHITECT AR 984311
8/10/20
RUSSELL C. PAGE
STATE OF IDAHO

SHEET NAME
EXTERIOR ELEVATIONS

SHEET NUMBER
A2.1

8/10/2020, 10:34 AM, N:\Home\20-113 WENDY'S PONDERAY\30_SMART_55-SQUARE_A2_1_Exterior Elevations.dwg, user

A. SEAL EXTERIOR WALL AND ROOF PENETRATIONS AND JOINTS BETWEEN DISSIMILAR MATERIALS TO ENSURE A COMPLETELY WEATHER-TIGHT SEAL. SEALANT LOCATIONS INCLUDE BUT ARE NOT LIMITED TO : LIGHT FIXTURE MOUNTS, DOOR AND WINDOW FRAMES, FASCIA EDGES, SIGNAGE MOUNTS, CONDUIT PENETRATIONS, SCUPPERS, ELECTRICAL OUTLETS, HOSE BIBS, AND UTILITY SERVICE ENTRANCES.

B. PROVIDE CONTINUOUS EXTERIOR WEATHER BARRIER BEHIND ALL EXTERIOR FINISHES. UTILIZE COMMERCIAL GRADE BUILDING WRAP AT CORRUGATED METAL PANELS. UTILIZE FLUID APPLIED OR SELF ADHERING WEATHER BARRIER AT MASONRY, EIFS, TILE FIBER CEMENT PANELS AND ACM. COORDINATE TRANSITIONS PER MFR'S RECOMMENDATIONS. APPROVED ALTERNATE: PROVIDE FLUID APPLIED OR SELF ADHERING WEATHER BARRIER BEHIND ALL EXTERIOR FINISHES.

C. EXTERIOR SIDEWALKS AND PAVING ARE SHOWN FOR DESIGN INTENT ONLY. G.C. SHALL BE RESPONSIBLE FOR COORDINATING SCOPE OF WORK WITH OWNER'S REPRESENTATIVE AND/OR CIVIL DRAWINGS.

D. GRADES SHALL BE 2" MIN. BELOW FLOOR SLAB AND SHALL SLOPE AWAY FROM BUILDING @ 5% SLOPE EXCEPT @ PEDESTRIAN PATHS WHICH SHALL BE SLOPED AWAY FROM BUILDING @ 1/8" PER FOOT MIN. AND 1/4" PER FOOT MAX. UNLESS OTHER WISE NOTED IN STAMPED CIVIL PLANS.

E. ITEMS MOUNTED ON TOP OF THE PARAPET ARE TO BE SET IN A FULL BED OF SEALANT AND HAVE FULL DEPTH BLOCKING IMMEDIATELY BELOW CAP, FASCIA, AND DRIP EDGE.

F. SEE STRUCTURAL PLAN AND DETAILS FOR ADDITIONAL FRAMING REQUIREMENTS.

G. PROVIDE CONTINUOUS CLASS I OR CLASS 2 VAPOR RETARDER ON THE INTERIOR SIDE OF THE WALL FRAMING AND BEHIND APPLIED WALL FINISH SHEATHING IN ASHRAE ZONES MAINE 4 AND 5 THROUGH 8. LAP AND TAPE ALL SEAMS TO ACHIEVE CONTINUOUS COVERAGE OVER THE ENTIRE UNFENESTRATED BUILDING ENVELOPE.

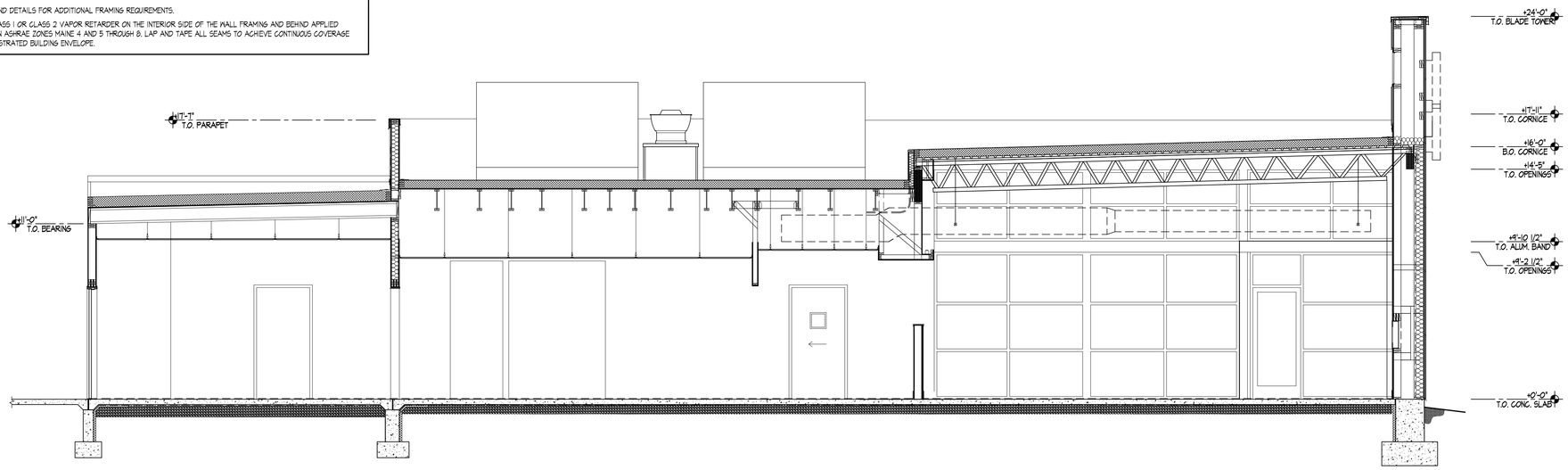

03 BUILDING SECTION
SCALE: 1/4"=1'-0"

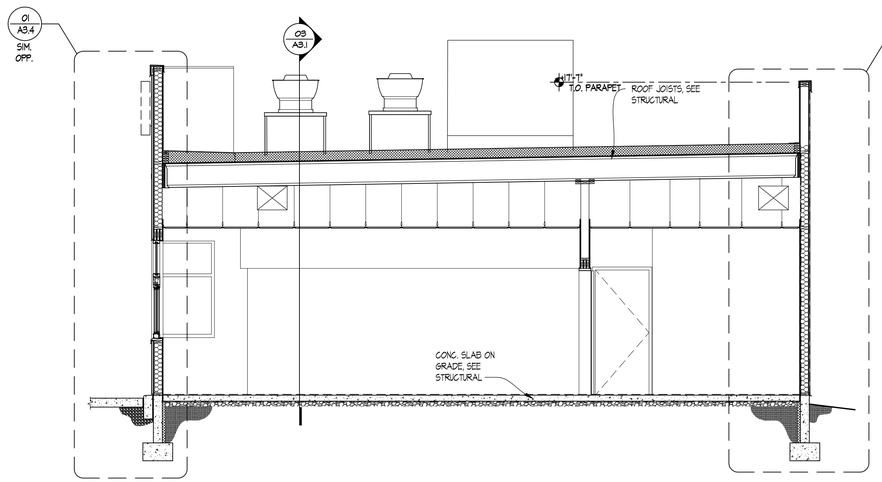

02 BUILDING SECTION
SCALE: 1/4"=1'-0"

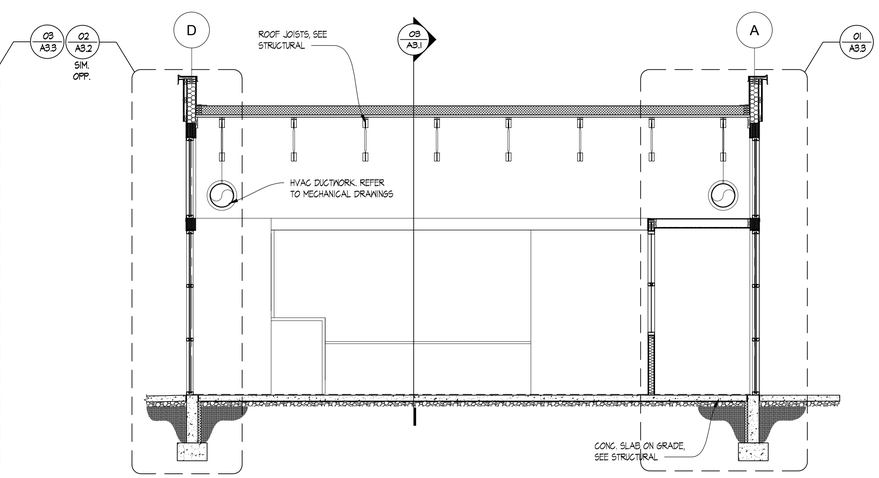

01 BUILDING SECTION
SCALE: 1/4"=1'-0"

SITE NUMBER:	12281
BASE MDL:	SMART 55 - SQUARE 2017
ASSET TYPE:	FRANCHISEE
CLASSIFICATION:	NEW
OWNER:	WENSPOK
BASE VERSION:	2017
UPGRADE CLASSIFICATION:	NEW BUILD
PROJECT YEAR:	2020
FURNITURE PACKAGE:	2016 V3
DRAWING RELEASE	JANUARY 2020

Russell C. Page
ARCHITECTS
204 N. Division Street, Suite 'E'
Spokane, WA 99202
(509) 467-9748 Fx: (509) 467-9817

PROJECT TYPE: NEW
SMART 55 SQE

Wendy's®

HIGHWAY 95
PONDERAY, ID 83852

REV.	DATE	DESCRIPTION
△		
△		

ISSUE DATE: 5-28-2020

PROJECT NUMBER: 20-113

DRAWN BY: MD/XXX

CHECKED BY: XXX

SEAL

LICENSED
ARCHITECT
AR 984311
RUSSELL C. PAGE
STATE OF IDAHO

SHEET NAME
BUILDING SECTIONS

SHEET NUMBER
A3.1

8/10/2020, 10:36 AM, N:\Home\20-113 WENDYS PONDERAY\30_SMART_55-SQUARE_A3_1_Wall Sections.dwg, user

GENERAL NOTES

A. SEAL EXTERIOR WALL AND ROOF PENETRATIONS AND JOINTS BETWEEN DISSIMILAR MATERIALS TO ENSURE A COMPLETELY WEATHER-TIGHT SEAL. SEALANT LOCATIONS INCLUDE BUT ARE NOT LIMITED TO : LIGHT FIXTURE MOUNTS, DOOR AND WINDOW FRAMES, FASCIA EDGES, SIGNAGE MOUNTS, CONDUIT PENETRATIONS, SCUPPERS, ELECTRICAL OUTLETS, HOSE BIBS, AND UTILITY SERVICE ENTRANCES.

B. PROVIDE CONTINUOUS EXTERIOR WEATHER BARRIER BEHIND ALL EXTERIOR FINISHES. UTILIZE COMMERCIAL GRADE BUILDING WRAP AT CORRUGATED METAL PANELS UTILIZE FLUID APPLIED OR SELF ADHERING WEATHER BARRIER AT MASONRY, EIFS, TILE FIBER CEMENT PANELS AND ACM. COORDINATE TRANSITIONS PER MFR'S RECOMMENDATIONS. APPROVED ALTERNATE. PROVIDE FLUID APPLIED OR SELF ADHERING WEATHER BARRIER BEHIND ALL EXTERIOR FINISHES.

C. EXTERIOR SIDEWALKS AND PAVING ARE SHOWN FOR DESIGN INTENT ONLY. G.C. SHALL BE RESPONSIBLE FOR COORDINATING SCOPE OF WORK WITH OWNER'S REPRESENTATIVE AND/OR CIVIL DRAWINGS.

D. GRADES SHALL BE 2" MIN. BELOW FLOOR SLAB AND SHALL SLOPE AWAY FROM BUILDING @ 5% SLOPE EXCEPT @ PEDESTRIAN PATHS WHICH SHALL BE SLOPED AWAY FROM BUILDING @ ¼" PER FOOT MIN. AND ½" PER FOOT MAX. UNLESS OTHER WISE NOTED IN STAMPED CIVIL PLANS.

E. ITEMS MOUNTED ON TOP OF THE PARAPET ARE TO BE SET IN A FULL BED OF SEALANT AND HAVE FULL DEPTH BLOCKING IMMEDIATELY BELOW CAP, FASCIA, AND DRIP EDGE.

F. SEE STRUCTURAL PLAN AND DETAILS FOR ADDITIONAL FRAMING REQUIREMENTS.

G. PROVIDE CONTINUOUS CLASS I OR CLASS 2 VAPOR RETARDER ON THE INTERIOR SIDE OF THE WALL FRAMING AND BEHIND APPLIED WALL FINISH SHEATHING IN ASHRAE ZONES MAINE 4 AND 5 THROUGH 8. LAP AND TAPE ALL SEAMS TO ACHIEVE CONTINOUS COVERAGE OVER THE ENTIRE UNFENESTRATED BUILDING ENVELOPE.

BLDG. INSULATION SCHEDULE DIV. 7

DESCRIPTION (ZONE 5)	THICKNESS (TOTAL R-VALUE)	LOCATION
RIGID PERIMETER FOUNDATION INSULATION (EXTRUDED POLYSTYRENE)	R-10	PERIMETER FOUNDATION TO FROST DEPTH
BATT OR RIGID INSULATION	5 1/2" (R-20)	EXTERIOR WALL CAVITY
FIBERGLASS BATT INSULATION (FOIL FACE FSK-25)	5 1/2" (R-20)	EXTERIOR WALL CAVITY @ EXPOSED AREAS ABOVE CEILING
RIGID ROOF INSULATION (POLYISOCYANAURATE)	6" PROVIDED (R=30ci)	ABOVE ROOF DECK, TAPERED TO DRAIN
SOUND ATTENUATION BATT INSULATION	3 1/2" U.N.O.	INTERIOR WALL CAVITIES - SEE PARTITION TYPES

BLDG. INSULATION GENERAL NOTES

1. INSULATION LOCATIONS SHOWN IN SCHEDULE ARE INTENDED ONLY FOR CLARIFICATION PURPOSES AND ARE NOT INTENDED TO BE ALL-ENCOMPASSING. PROVIDE EACH INSULATION TYPE AS REQUIRED TO FULLY MAINTAIN THE THERMAL INTEGRITY OF THE CONSTRUCTION ASSEMBLIES RELATED TO THE ENTIRE BUILDING ENVELOPE.

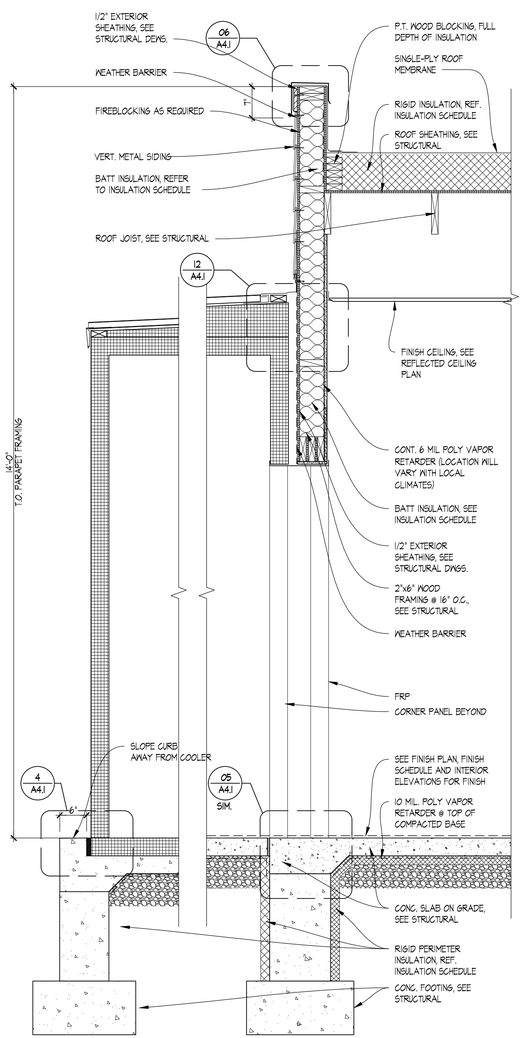

03 WALL SECTION
SCALE: 3/4"=1'-0"

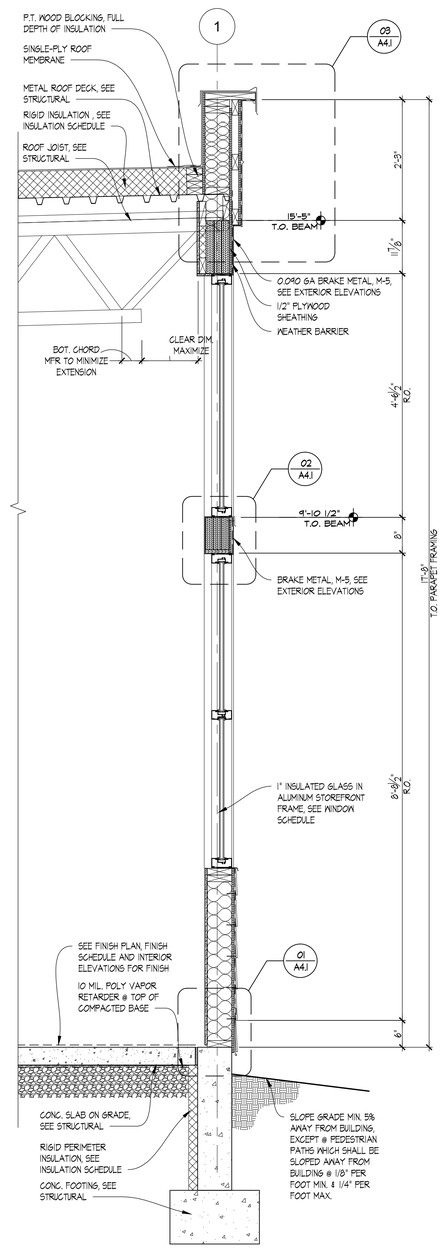

02 WALL SECTION
SCALE: 3/4"=1'-0"

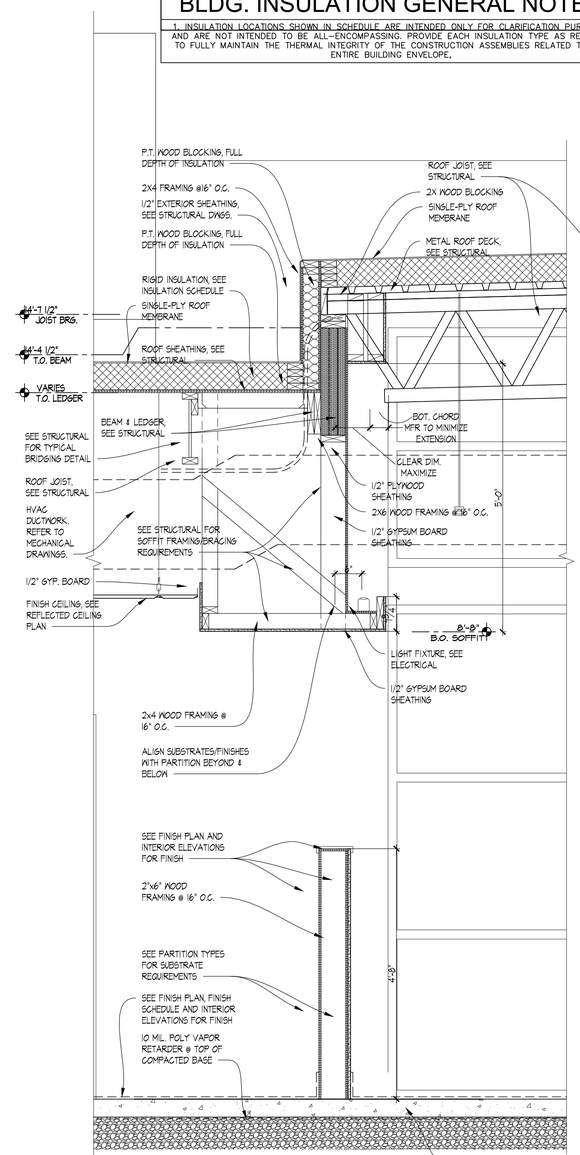

01A WALL SECTION
SCALE: 3/4"=1'-0"

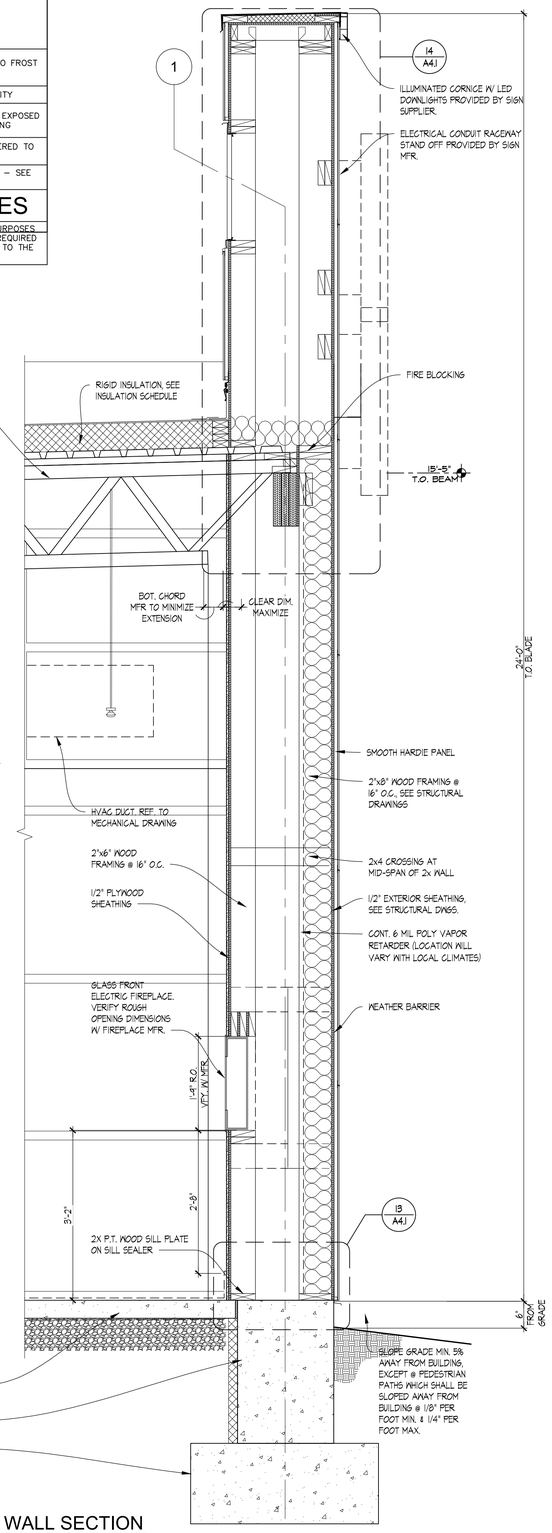

01 WALL SECTION
SCALE: 3/4"=1'-0"

SITE NUMBER:	12281
BASE MDL:	SMART 55 - SQUARE 2017
ASSET TYPE:	FRANCHISEE
CLASSIFICATION:	NEW
OWNER:	WENSPOK
BASE VERSION:	2017
UPGRADE CLASSIFICATION:	NEW BUILD
PROJECT YEAR:	2020
FURNITURE PACKAGE:	2016 V3
DRAWING RELEASE	JANUARY 2020

Russell C. Page ARCHITECTS
204 N. Division Street, Suite 'E'
Spokane, WA 99202
(509) 467-9748 Fx: (509) 467-9817

PROJECT TYPE: NEW
SMART 55 SQE

Wendy's
HIGHWAY 95
PONDERAY, ID 83852

REV.	DATE	DESCRIPTION
△		
△		

ISSUE DATE: 5-28-2020
PROJECT NUMBER: 20-113
DRAWN BY: MD/XXX
CHECKED BY: XXX

SEAL

LICENSED ARCHITECT AR 984311
RUSSELL C. PAGE
STATE OF IDAHO

SHEET NAME
WALL SECTIONS

SHEET NUMBER
A3.2

8/10/2020, 10:56 AM, N:\Home\20-113 WENDYS PONDERAY\3D_SMART_55-SQUARE_A3_1_Wall Sections.dwg, user

GENERAL NOTES

A. SEAL EXTERIOR WALL AND ROOF PENETRATIONS AND JOINTS BETWEEN DISSIMILAR MATERIALS TO ENSURE A COMPLETELY WEATHER-TIGHT SEAL. SEALANT LOCATIONS INCLUDE BUT ARE NOT LIMITED TO : LIGHT FIXTURE MOUNTS, DOOR AND WINDOW FRAMES, FASCIA EDGES, SIGNAGE MOUNTS, CONDUIT PENETRATIONS, SCUPPERS, ELECTRICAL OUTLETS, HOSE BIBS, AND UTILITY SERVICE ENTRANCES.

B. PROVIDE CONTINUOUS EXTERIOR WEATHER BARRIER BEHIND ALL EXTERIOR FINISHES. UTILIZE COMMERCIAL GRADE BUILDING WRAP AT CORRUGATED METAL PANELS. UTILIZE FLUID APPLIED OR SELF ADHERING WEATHER BARRIER AT MASONRY, EIFS, TILE FIBER CEMENT PANELS AND ACM. COORDINATE TRANSITIONS PER MFR'S RECOMMENDATIONS. APPROVED ALTERNATE: PROVIDE FLUID APPLIED OR SELF ADHERING WEATHER BARRIER BEHIND ALL EXTERIOR FINISHES.

C. EXTERIOR SIDEWALKS AND PAVING ARE SHOWN FOR DESIGN INTENT ONLY. G.C. SHALL BE RESPONSIBLE FOR COORDINATING SCOPE OF WORK WITH OWNER'S REPRESENTATIVE AND/OR CIVIL DRAWINGS.

D. GRADES SHALL BE 2" MIN. BELOW FLOOR SLAB AND SHALL SLOPE AWAY FROM BUILDING @ 5% SLOPE EXCEPT @ PEDESTRIAN PATHS WHICH SHALL BE SLOPED AWAY FROM BUILDING @ 1/8" PER FOOT MIN. AND 1/4" PER FOOT MAX. UNLESS OTHER WISE NOTED IN STAMPED CIVIL PLANS.

E. ITEMS MOUNTED ON TOP OF THE PARAPET ARE TO BE SET IN A FULL BED OF SEALANT AND HAVE FULL DEPTH BLOCKING IMMEDIATELY BELOW CAP, FASCIA, AND DRIP EDGE.

F. SEE STRUCTURAL PLAN AND DETAILS FOR ADDITIONAL FRAMING REQUIREMENTS.

G. PROVIDE CONTINUOUS CLASS I OR CLASS 2 VAPOR RETARDER ON THE INTERIOR SIDE OF THE WALL FRAMING AND BEHIND APPLIED WALL FINISH SHEATHING IN ASHRAE ZONES MARINE 4 AND 5 THROUGH 8. LAP AND TAPE ALL SEAMS TO ACHIEVE CONTINUOUS COVERAGE OVER THE ENTIRE UNFENESTRATED BUILDING ENVELOPE.

BLDG. INSULATION SCHEDULE

DESCRIPTION (ZONE 5)	THICKNESS (TOTAL R-VALUE)	LOCATION
RIGID PERIMETER FOUNDATION INSULATION (EXTRUDED POLYSTYRENE)	R-10	PERIMETER FOUNDATION TO FROST DEPTH
BATT OR RIGID INSULATION	5 1/2" (R-21)	EXTERIOR WALL CAVITY
FIBERGLASS BATT INSULATION (FOIL FACE FSK-25)	5 1/2" (R-21)	EXTERIOR WALL CAVITY @ EXPOSED AREAS ABOVE CEILING
RIGID ROOF INSULATION (POLYISOCYANAURATE)	8" PROVIDED (R=38ci)	ABOVE ROOF DECK, TAPERED TO DRAIN
SOUND ATTENUATION BATT INSULATION	3 1/2" U.N.O.	INTERIOR WALL CAVITIES – SEE PARTITION TYPES

BLDG. INSULATION GENERAL NOTES

1. INSULATION LOCATIONS SHOWN IN SCHEDULE ARE INTENDED ONLY FOR CLARIFICATION PURPOSES AND ARE NOT INTENDED TO BE ALL-ENCOMPASSING. PROVIDE EACH INSULATION TYPE AS REQUIRED TO FULLY MAINTAIN THE THERMAL INTEGRITY OF THE CONSTRUCTION ASSEMBLIES RELATED TO THE ENTIRE BUILDING ENVELOPE,

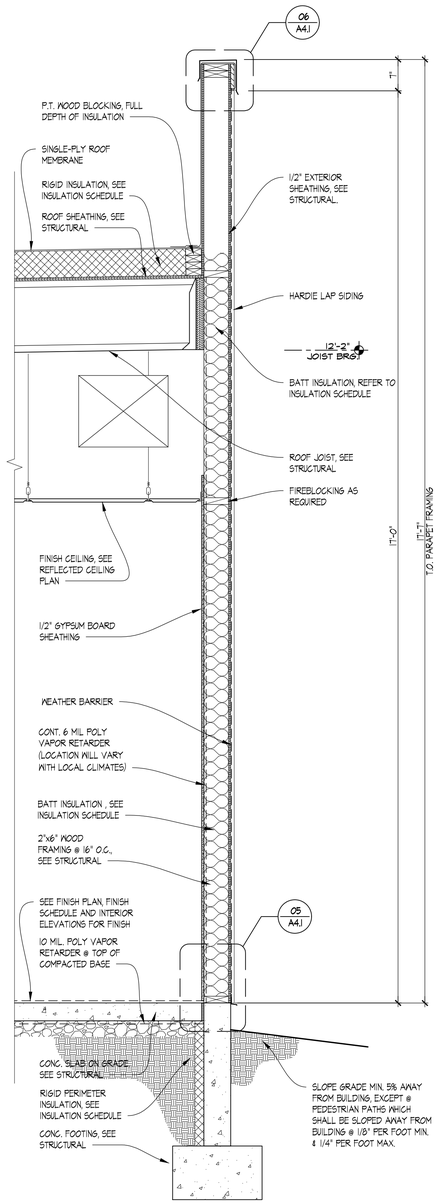

03 WALL SECTION
SCALE: 3/4"=1'-0"

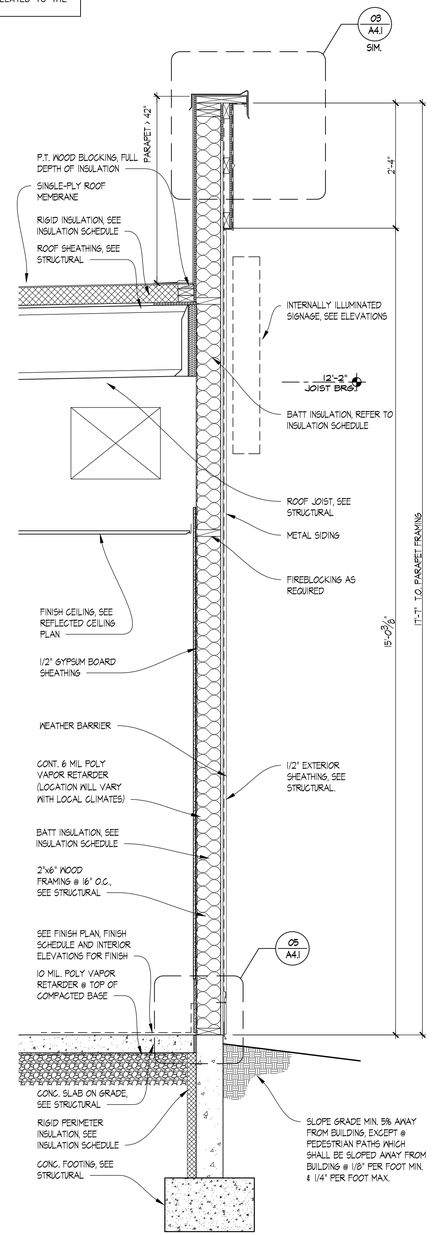

02 WALL SECTION
SCALE: 3/4"=1'-0"

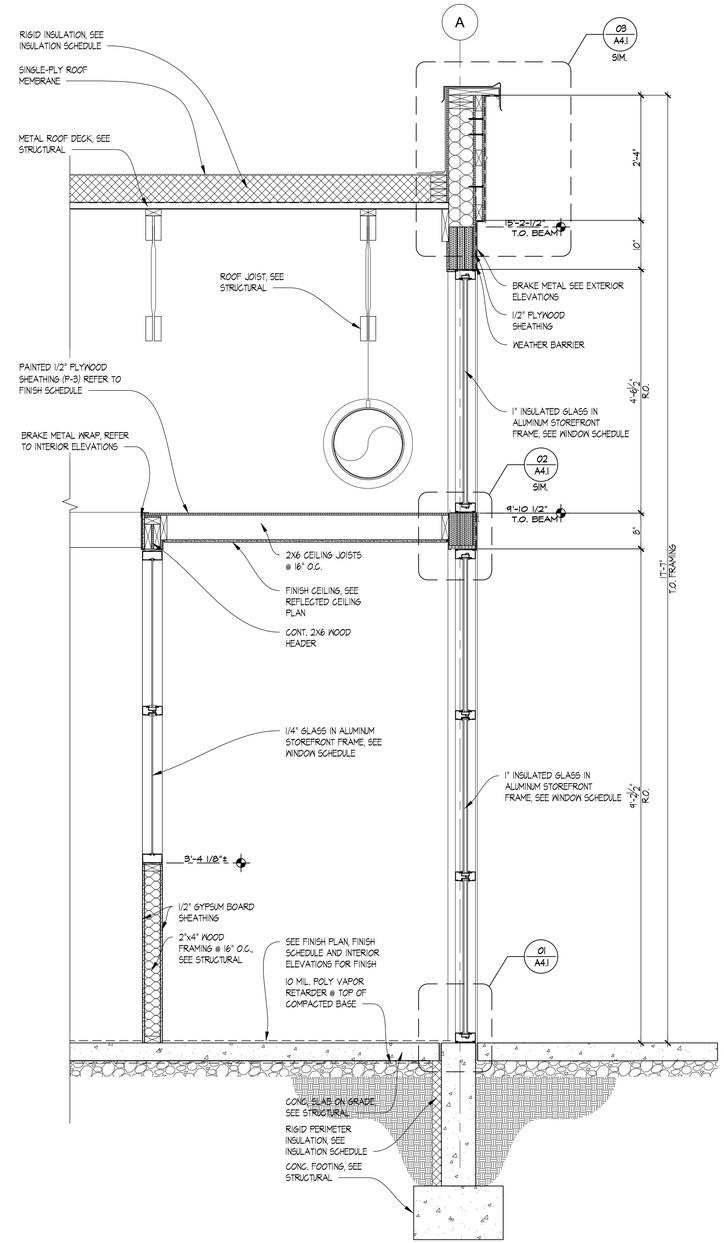

01 WALL SECTION
SCALE: 3/4"=1'-0"

SITE NUMBER:	12281
BASE MDL:	SMART 55 - SQUARE 2017
ASSET TYPE:	FRANCHISEE
CLASSIFICATION:	NEW
OWNER:	WENSPOK
BASE VERSION:	2017
UPGRADE CLASSIFICATION:	NEW BUILD
PROJECT YEAR:	2020
FURNITURE PACKAGE:	2016 V3
DRAWING RELEASE	JANUARY 2020

Russell C. Page ARCHITECTS
204 N. Division Street, Suite 'E'
Spokane, WA 99202
(509) 467-9748 Fx: (509) 467-9817

PROJECT TYPE: NEW
SMART 55 SQE

Wendy's.
HIGHWAY 95
PONDERAY, ID 83852

REV.	DATE	DESCRIPTION
△		
△		

ISSUE DATE: 5-28-2020
PROJECT NUMBER: 20-113
DRAWN BY: MD XXX
CHECKED BY: XXX

SEAL

LICENSED ARCHITECT AR 984311
RUSSELL C. PAGE
STATE OF IDAHO

SHEET NAME
WALL SECTIONS

SHEET NUMBER
A3.3

8/10/2020, 10:39 AM, N:\Home\20-113 WENDYS PONDERAY\3D_SMART_55-SQUARE_A3_1_Wall Sections.dwg, user

GENERAL NOTES

A. SEAL EXTERIOR WALL AND ROOF PENETRATIONS AND JOINTS BETWEEN DISSIMILAR MATERIALS TO ENSURE A COMPLETELY WEATHER-TIGHT SEAL. SEALANT LOCATIONS INCLUDE BUT ARE NOT LIMITED TO : LIGHT FIXTURE MOUNTS, DOOR AND WINDOW FRAMES, FASCIA EDGES, SIGNAGE MOUNTS, CONDUIT PENETRATIONS, SCUPPERS, ELECTRICAL OUTLETS, HOSE BIBS, AND UTILITY SERVICE ENTRANCES.

B. PROVIDE CONTINUOUS EXTERIOR WEATHER BARRIER BEHIND ALL EXTERIOR FINISHES. UTILIZE COMMERCIAL GRADE BUILDING WRAP AT CORRUGATED METAL PANELS. UTILIZE FLUID APPLIED OR SELF ADHERING WEATHER BARRIER AT MASONRY, EIFS, TILE FIBER CEMENT PANELS AND ACM. COORDINATE TRANSITIONS PER MFR'S RECOMMENDATIONS. APPROVED ALTERNATE: PROVIDE FLUID APPLIED OR SELF ADHERING WEATHER BARRIER BEHIND ALL EXTERIOR FINISHES.

C. EXTERIOR SIDEWALKS AND PAVING ARE SHOWN FOR DESIGN INTENT ONLY. G.C. SHALL BE RESPONSIBLE FOR COORDINATING SCOPE OF WORK WITH OWNER'S REPRESENTATIVE AND/OR CIVIL DRAWINGS.

D. GRADES SHALL BE 2" MIN. BELOW FLOOR SLAB AND SHALL SLOPE AWAY FROM BUILDING @ 5% SLOPE EXCEPT @ PEDESTRIAN PATHS WHICH SHALL BE SLOPED AWAY FROM BUILDING @ ⅛" PER FOOT MIN. AND ¼" PER FOOT MAX. UNLESS OTHER WISE NOTED IN STAMPED CIVIL PLANS.

E. ITEMS MOUNTED ON TOP OF THE PARAPET ARE TO BE SET IN A FULL BED OF SEALANT AND HAVE FULL DEPTH BLOCKINGS IMMEDIATELY BELOW CAP, FASCIA, AND DRIP EDGE.

F. SEE STRUCTURAL PLAN AND DETAILS FOR ADDITIONAL FRAMING REQUIREMENTS.

G. PROVIDE CONTINUOUS CLASS I OR CLASS 2 VAPOR RETARDER ON THE INTERIOR SIDE OF THE WALL FRAMING AND BEHIND APPLIED WALL FINISH SHEATHING IN ASHRAE ZONES MARINE 4 AND 5 THROUGH 8. LAP AND TAPE ALL SEAMS TO ACHIEVE CONTINUOUS COVERAGE OVER THE ENTIRE UNFENESTRATED BUILDING ENVELOPE.

BLDG. INSULATION SCHEDULE

DESCRIPTION (ZONE 5)	THICKNESS (TOTAL R-VALUE)	LOCATION
RIGID PERIMETER FOUNDATION INSULATION (EXTRUDED POLYSTYRENE)	R-10	PERIMETER FOUNDATION TO FROST DEPTH
BATT OR RIGID INSULATION	5 1/2" (R-21)	EXTERIOR WALL CAVITY
FIBERGLASS BATT INSULATION (FOIL FACE FSK-25)	5 1/2" (R-21)	EXTERIOR WALL CAVITY @ EXPOSED AREAS ABOVE CEILING
RIGID ROOF INSULATION (POLYISOCYANAURATE)	8" PROVIDED (R=38ci)	ABOVE ROOF DECK, TAPERED TO DRAIN
SOUND ATTENUATION BATT INSULATION	3 1/2" U.N.O.	INTERIOR WALL CAVITIES - SEE PARTITION TYPES

BLDG. INSULATION GENERAL NOTES

1. INSULATION LOCATIONS SHOWN IN SCHEDULE ARE INTENDED ONLY FOR CLARIFICATION PURPOSES AND ARE NOT INTENDED TO BE ALL-ENCOMPASSING. PROVIDE EACH INSULATION TYPE AS REQUIRED TO FULLY MAINTAIN THE THERMAL INTEGRITY OF THE CONSTRUCTION ASSEMBLIES RELATED TO THE ENTIRE BUILDING ENVELOPE.

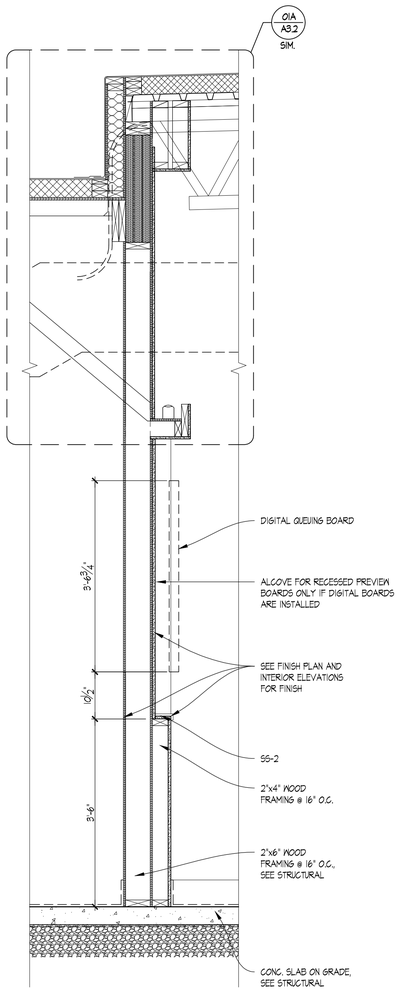

04 WALL SECTION
SCALE: 3/4"=1'-0"

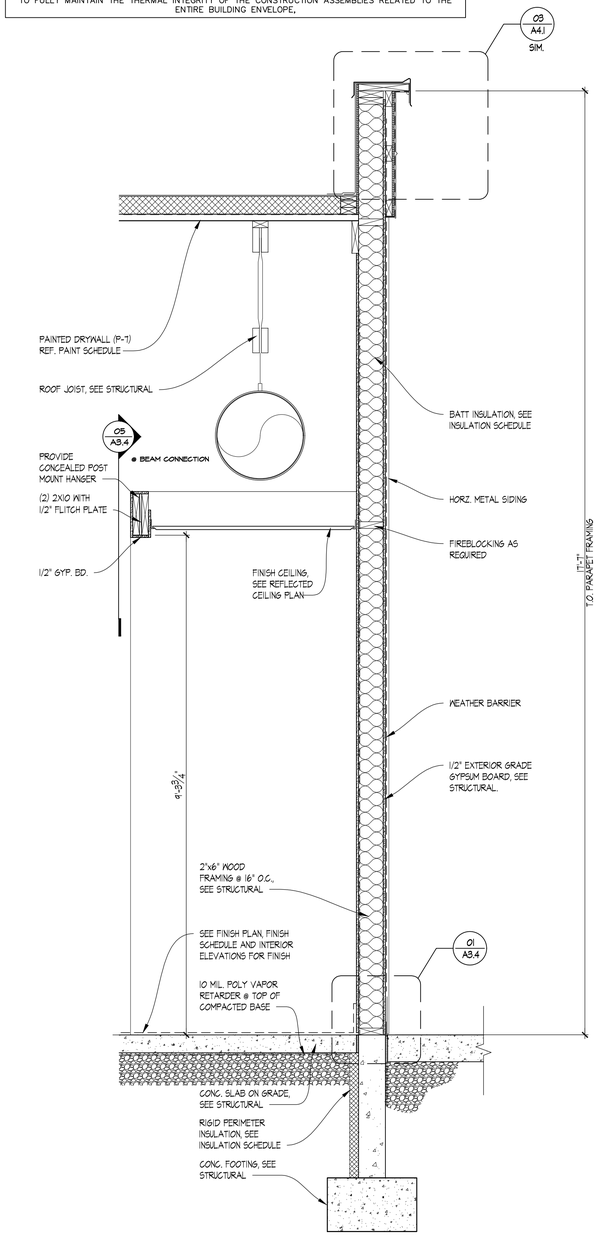

03 WALL SECTION
SCALE: 3/4"=1'-0"

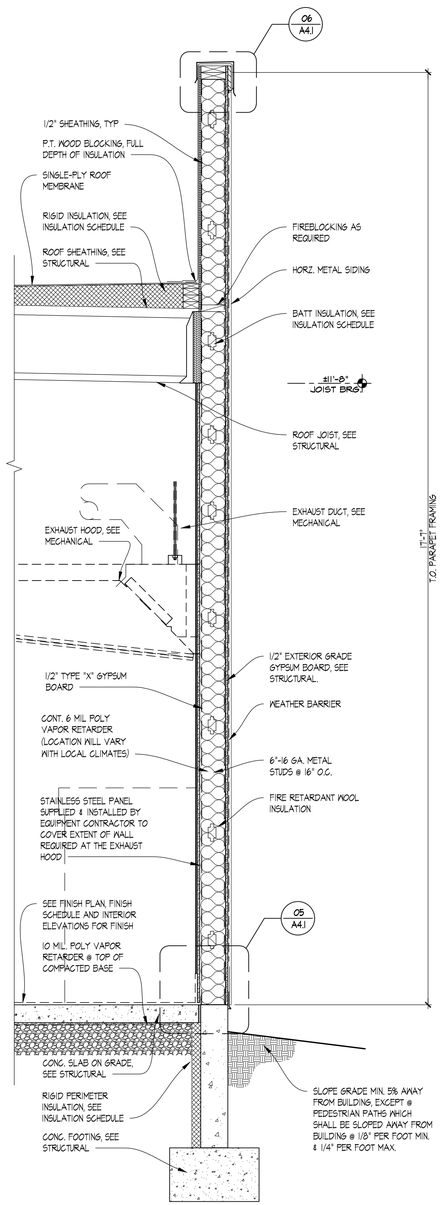

02 WALL SECTION
SCALE: 3/4"=1'-0"

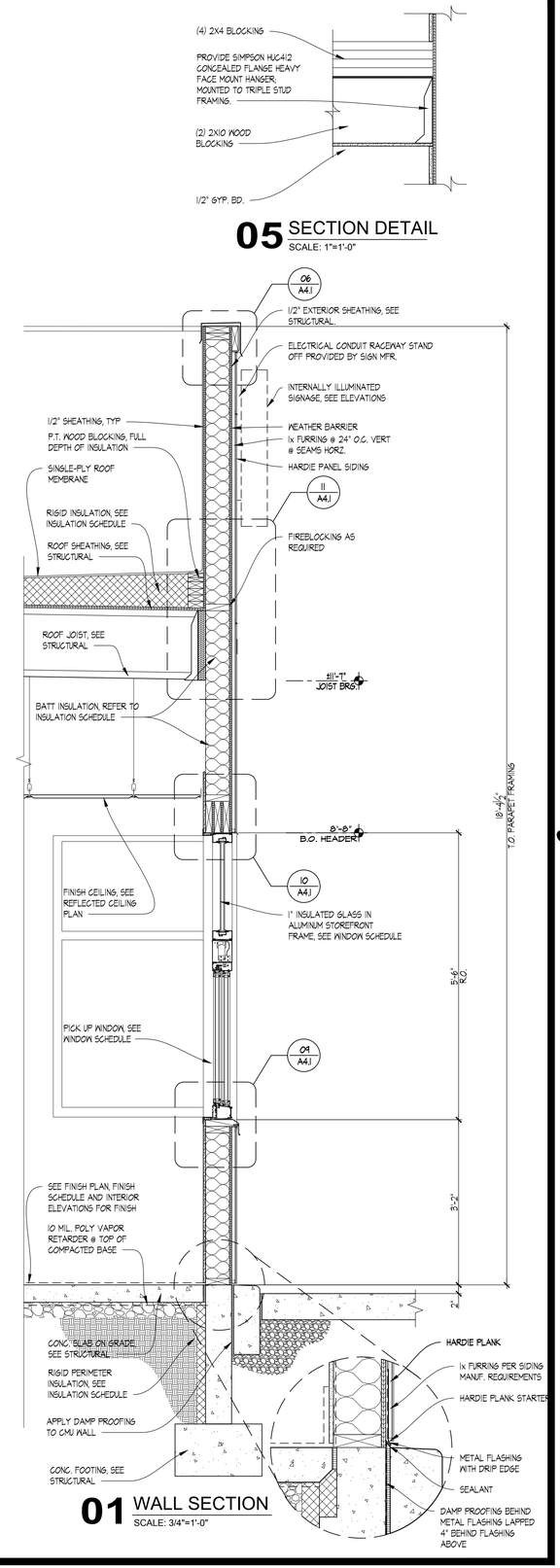

01 WALL SECTION
SCALE: 3/4"=1'-0"

05 SECTION DETAIL
SCALE: 1"=1'-0"

SITE NUMBER:	12281
BASE MDL:	SMART 55 - SQUARE 2017
ASSET TYPE:	FRANCHISEE
CLASSIFICATION:	NEW
OWNER:	WENSPOK
BASE VERSION:	2017
UPGRADE CLASSIFICATION:	NEW BUILD
PROJECT YEAR:	2020
FURNITURE PACKAGE:	2016 V3
DRAWING RELEASE	JANUARY 2020

Russell C. Page ARCHITECTS
204 N. Division Street, Suite 'E'
Spokane, WA 99202
(509) 467-9748 Fx: (509) 467-9817

PROJECT TYPE: NEW SMART 55 SQE

Wendy's®
HIGHWAY 95
PONDERAY, ID 83852

REV.	DATE	DESCRIPTION
△		
△		

ISSUE DATE: 5-28-2020
PROJECT NUMBER: 20-113
DRAWN BY: MD/XXX
CHECKED BY: XXX

SEAL

LICENSED ARCHITECT AR 984311
RUSSELL C. PAGE
STATE OF IDAHO

SHEET NAME
WALL SECTIONS

SHEET NUMBER
A3.4

8/10/2020, 10:40 AM, N:\Home\20-113 WENDYS PONDERAY\3D_SMART_55-SQUARE_A3_1_Wall Sections.dwg, user

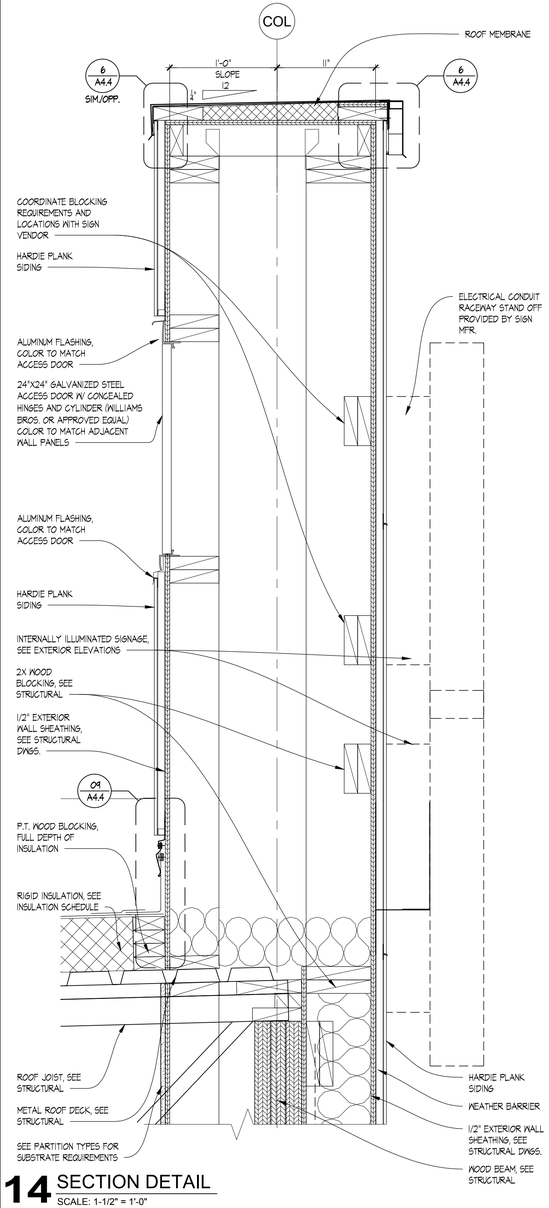

14 SECTION DETAIL
SCALE: 1-1/2" = 1'-0"

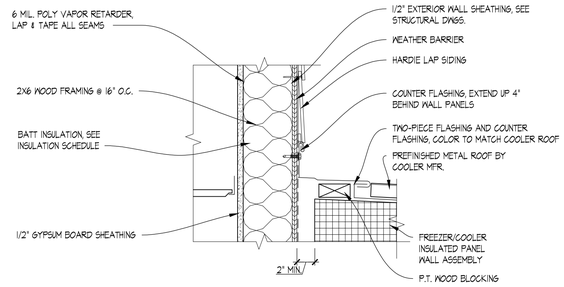

12 SECTION DETAIL
SCALE: 1-1/2" = 1'-0"

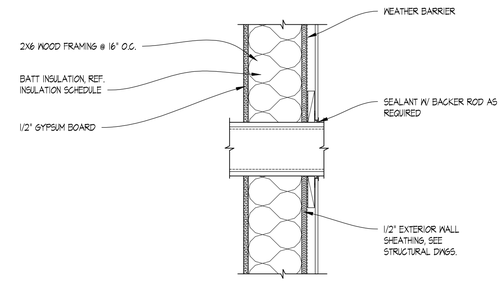

08 SECTION DETAIL
SCALE: 1-1/2" = 1'-0"

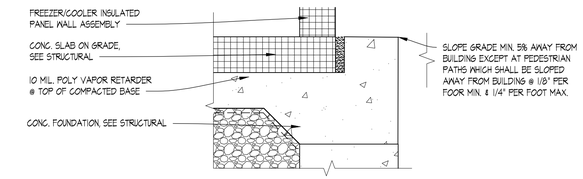

04 SECTION DETAIL
SCALE: 1-1/2" = 1'-0"

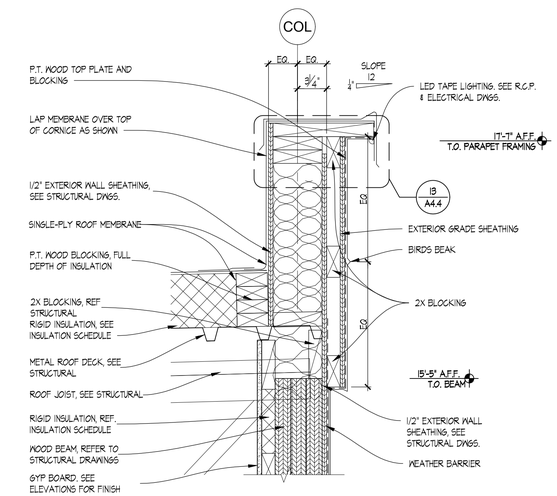

03 SECTION DETAIL
SCALE: 1-1/2" = 1'-0"

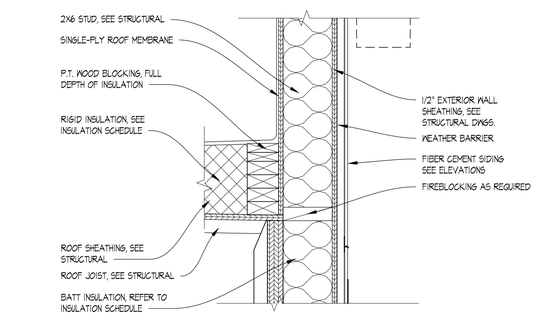

11 SECTION DETAIL
SCALE: 1-1/2" = 1'-0"

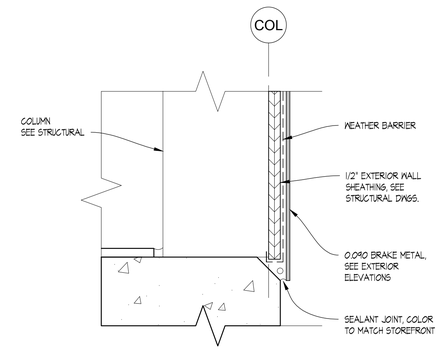

07 SECTION DETAIL @ COLUMN
SCALE: 6" = 1'-0"

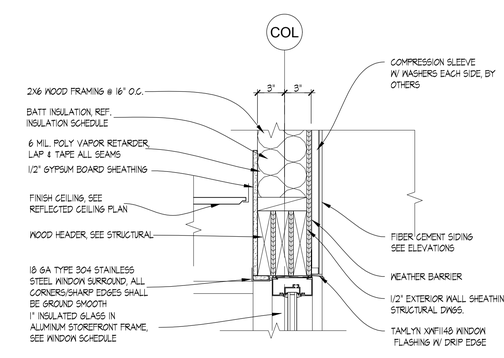

10 SECTION DETAIL
SCALE: 1-1/2" = 1'-0"

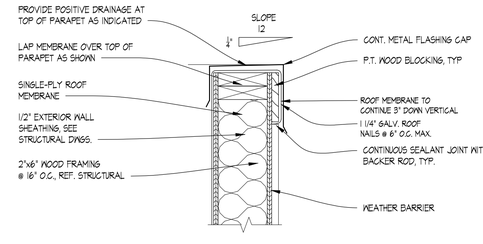

06 SECTION DETAIL
SCALE: 1-1/2" = 1'-0"

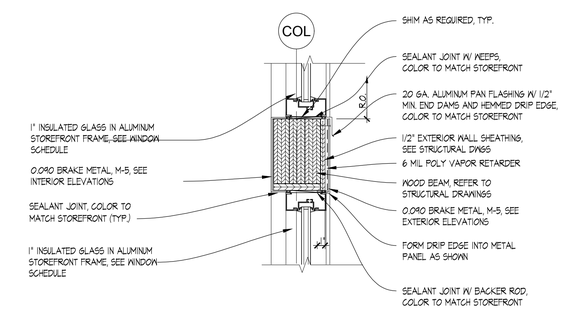

02 SECTION DETAIL
SCALE: 1-1/2" = 1'-0"

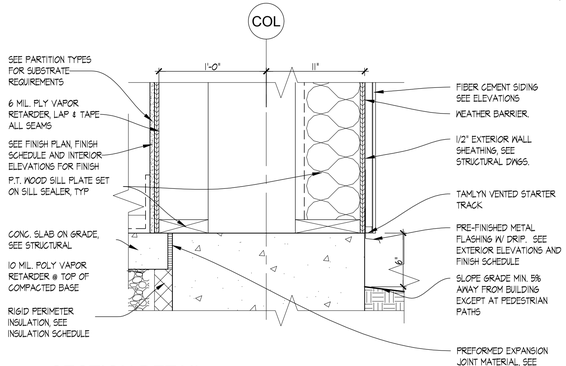

13 SECTION DETAIL
SCALE: 1-1/2" = 1'-0"

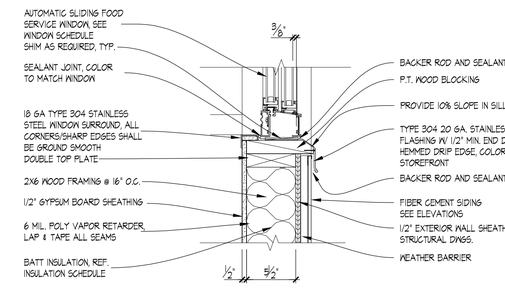

09 SECTION DETAIL
SCALE: 1-1/2" = 1'-0"

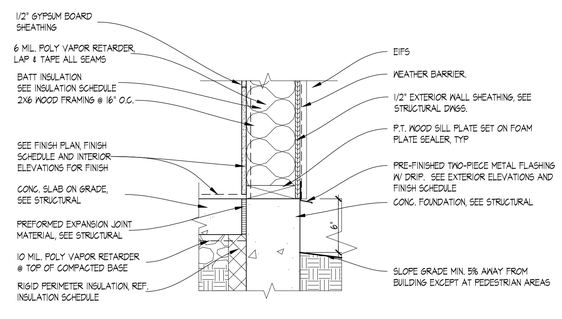

05 SECTION DETAIL
SCALE: 1-1/2" = 1'-0"

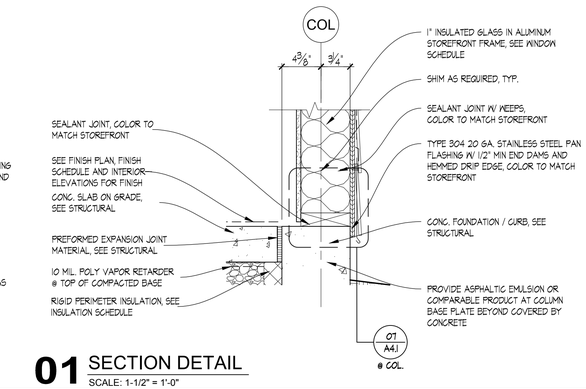

01 SECTION DETAIL
SCALE: 1-1/2" = 1'-0"

SITE NUMBER:	12281
BASE MDL:	SMART 55 - SQUARE 2017
ASSET TYPE:	FRANCHISEE
CLASSIFICATION:	NEW
OWNER:	WENSPOK
BASE VERSION:	2017
UPGRADE CLASSIFICATION:	NEW BUILD
PROJECT YEAR:	2020
FURNITURE PACKAGE:	2016 V3
DRAWING RELEASE	JANUARY 2020

Russell C. Page ARCHITECTS
204 N. Division Street, Suite 'E'
Spokane, WA 99202
(509) 467-9748 Fx: (509) 467-9817

PROJECT TYPE: NEW
SMART 55 SQE

Wendy's®
HIGHWAY 95
PONDERAY, ID 83852

REV.	DATE	DESCRIPTION
△		
△		

ISSUE DATE: 5-28-2020
PROJECT NUMBER: 20-113
DRAWN BY: MEXXX
CHECKED BY: XXX

SEAL

LICENSED ARCHITECT AR 984311
5/14/20
RUSSELL C. PAGE
STATE OF IDAHO

SHEET NAME
SECTION DETAILS -ALTERNATE LIGHTING-

SHEET NUMBER
A4.1

8/10/2020, 10:59 AM, N:\Home\20-113 WENDYS PONDERAY\99_SMART_55-SQUARE_A4_1_Section Details-2.dwg, user

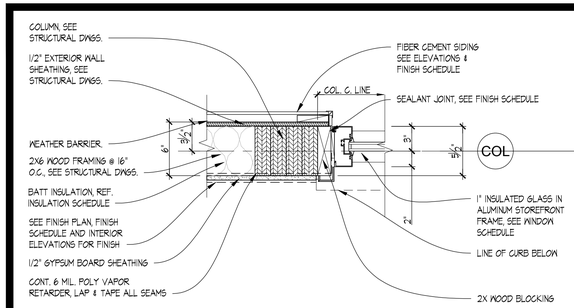

14 PLAN DETAIL
SCALE: 1-1/2" = 1'-0"

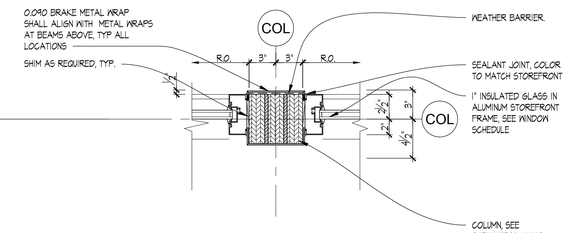

10 PLAN DETAIL
SCALE: 1-1/2" = 1'-0"

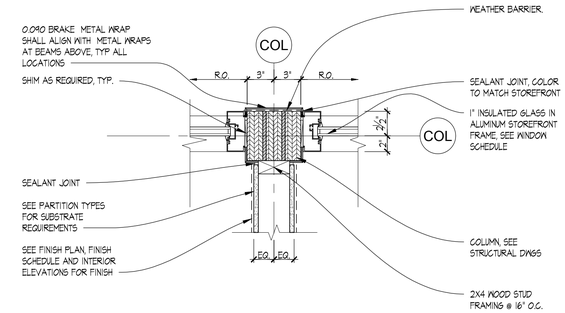

06 PLAN DETAIL
SCALE: 1-1/2" = 1'-0"

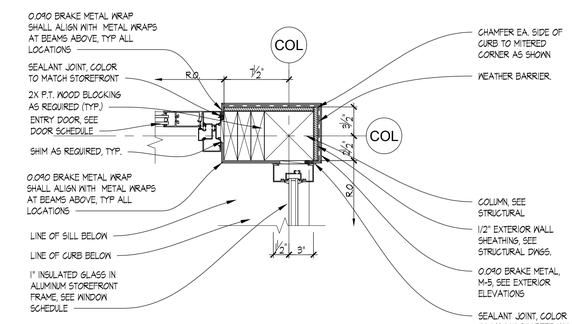

02 PLAN DETAIL
SCALE: 1-1/2" = 1'-0"

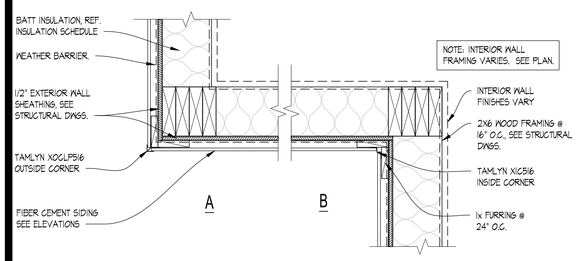

13 PLAN DETAIL
SCALE: 1-1/2" = 1'-0"

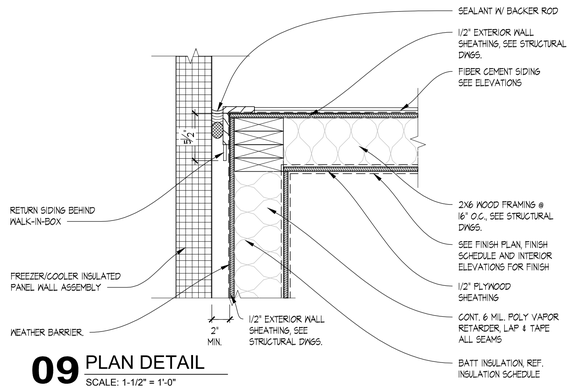

09 PLAN DETAIL
SCALE: 1-1/2" = 1'-0"

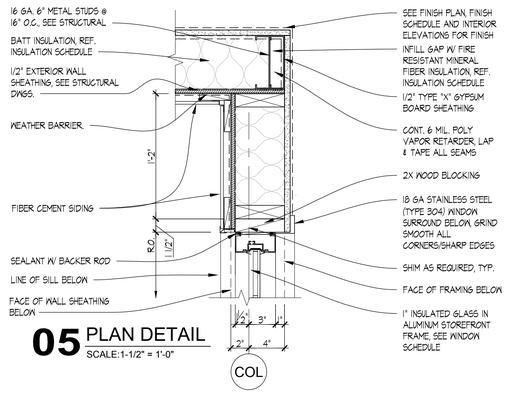

05 PLAN DETAIL
SCALE:1-1/2" = 1'-0"

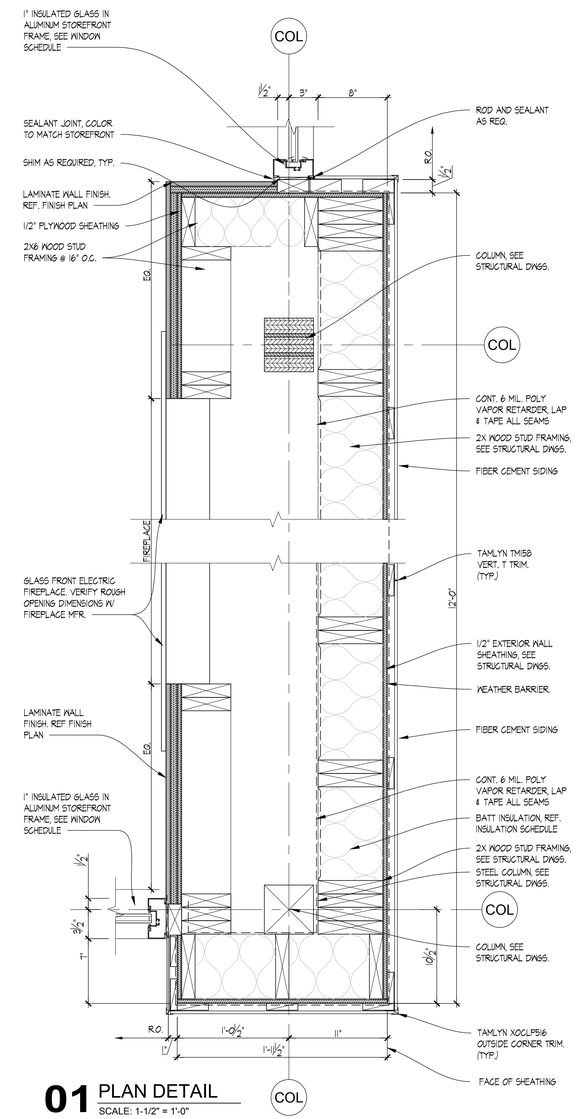

01 PLAN DETAIL
SCALE: 1-1/2" = 1'-0"

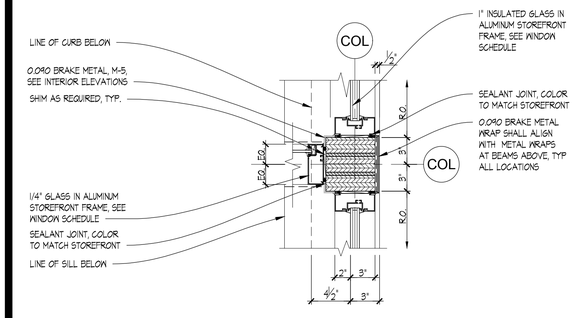

12 PLAN DETAIL
SCALE: 1-1/2" = 1'-0"

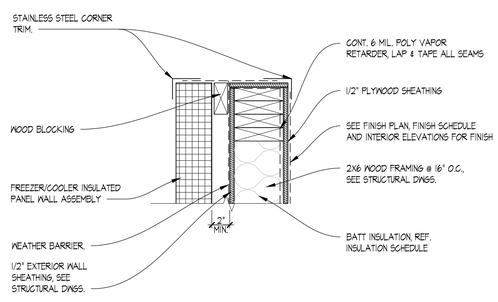

08 PLAN DETAIL
SCALE: 1-1/2" = 1'-0"

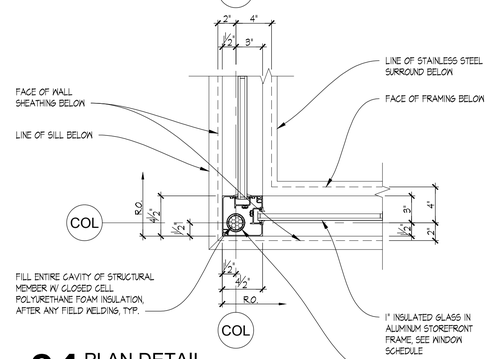

04 PLAN DETAIL
SCALE: 1-1/2" = 1'-0"

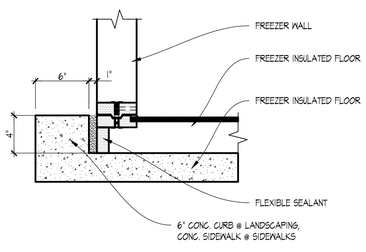

11 RECESSED SLAB @ FREEZER
SCALE: 1-1/2" = 1'-0"

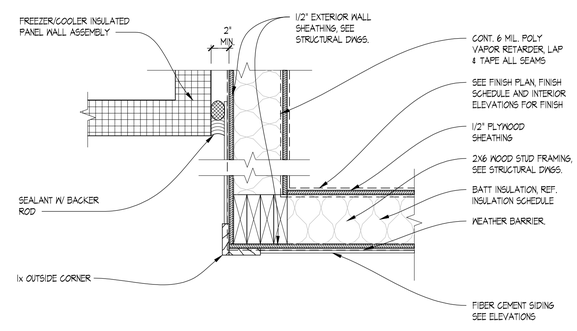

07 PLAN DETAIL
SCALE: 1-1/2" = 1'-0"

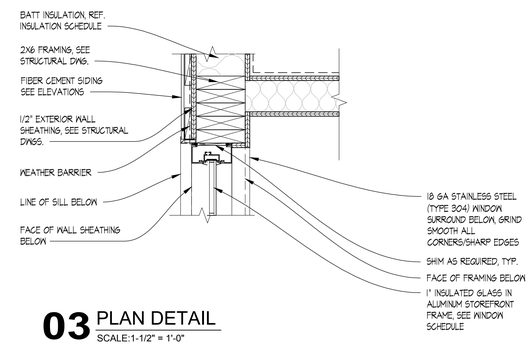

03 PLAN DETAIL
SCALE:1-1/2" = 1'-0"

SITE NUMBER:	12281
BASE MDL:	SMART 55 - SQUARE 2017
ASSET TYPE:	FRANCHISEE
CLASSIFICATION:	NEW
OWNER:	WENSPOK
BASE VERSION:	2017
UPGRADE CLASSIFICATION:	NEW BUILD
PROJECT YEAR:	2020
FURNITURE PACKAGE:	2016 V3
DRAWING RELEASE	JANUARY 2020

Russell C. Page ARCHITECTS
204 N. Division Street, Suite 'E'
Spokane, WA 99202
(509) 467-9748 Fx: (509) 467-9817

PROJECT TYPE: NEW SMART 55 SQE

Wendy's®
HIGHWAY 95
PONDERAY, ID 83852

REV.	DATE	DESCRIPTION
△		
△		

ISSUE DATE: 5-28-2020
PROJECT NUMBER: 20-113
DRAWN BY: MB XXX
CHECKED BY: XXX

SEAL

LICENSED ARCHITECT AR 984311
8/10/2020
RUSSELL C. PAGE
STATE OF IDAHO

SHEET NAME
PLAN DETAILS

SHEET NUMBER
A4.2

8/10/2020, 11:00 AM, N:\Home\20-113 WENDYS PONDERAY\30_SMART_55-SQUARE_A4_2_Plan Details.dwg, user

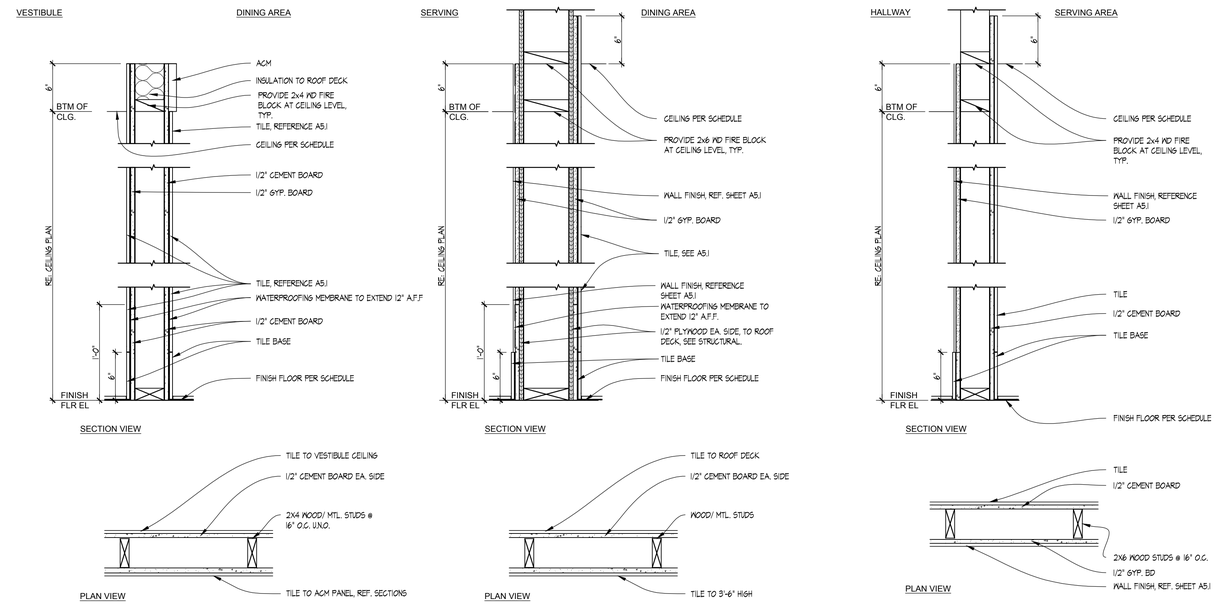

09 PARTITION TYPE

08 2x6 WOOD STUD SHEAR WALL @ 16" O.C. FIREBLOCKING @ SERVING CEILING

07 PARTITION TYPE

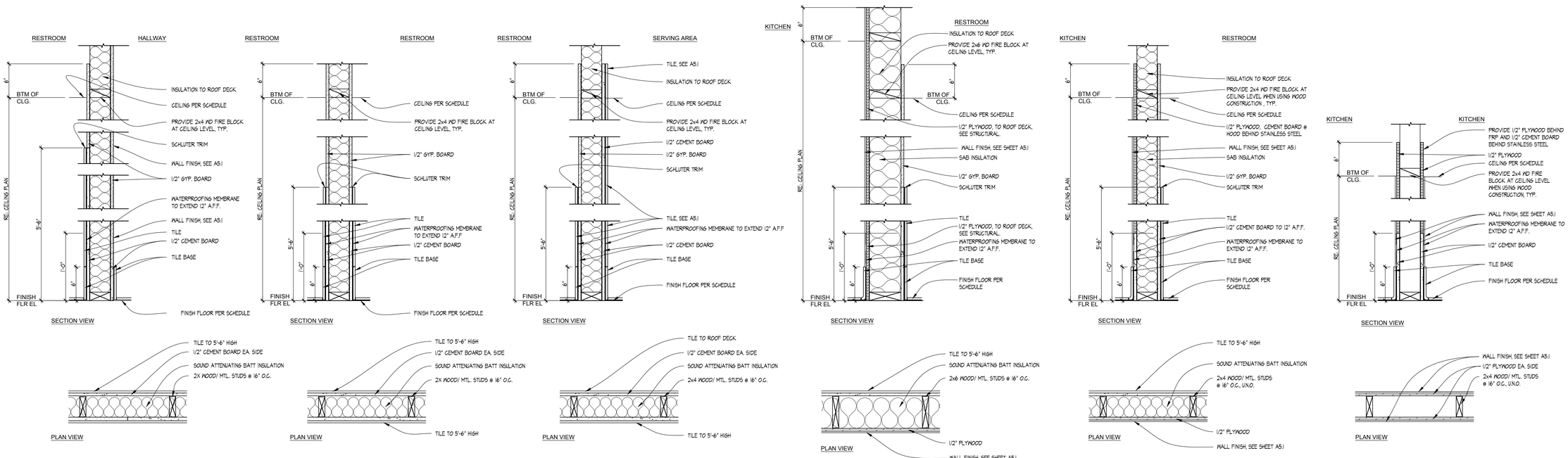

06 PARTITION TYPE

06A 6" WOOD STUDS SHEAR WALL

05 PARTITION TYPE

05A 6" WOOD STUDS SHEAR WALL

04 PARTITION TYPE

03 PARTITION TYPE

02 PARTITION TYPE

02A 5 1/2" MTL STUDS @ 16" O.C.

01 PARTITION TYPE

01A 3-5/8" MTL STUDS

01B 1/2" GYP. BD. EA. SIDE

01C 2x6" WOOD STUDS @ 16" O.C.

SITE NUMBER:	12281
BASE MDL:	SMART 55 - SQUARE 2017
ASSET TYPE:	FRANCHISEE
CLASSIFICATION:	NEW
OWNER:	WENSPOK
BASE VERSION:	2017
UPGRADE CLASSIFICATION:	NEW BUILD
PROJECT YEAR:	2020
FURNITURE PACKAGE:	2016 V3
DRAWING RELEASE	JANUARY 2020

Russell C. Page ARCHITECTS
204 N. Division Street, Suite 'E'
Spokane, WA 99202
(509) 467-9748 Fx: (509) 467-9817

PROJECT TYPE: NEW
SMART 55 SQE

Wendy's®
HIGHWAY 95
PONDERAY, ID 83852

REV.	DATE	DESCRIPTION
△		
△		

ISSUE DATE: 5-28-2020

PROJECT NUMBER: 20-113

DRAWN BY: MEXXX

CHECKED BY: XXX

SEAL

LICENSED ARCHITECT AR 984311
8/14/20
RUSSELL C. PAGE
STATE OF IDAHO

SHEET NAME
PARTITION TYPES

SHEET NUMBER
A4.3

8/10/2020, 11:01 AM, N:\Home\20-113 WENDYS PONDERAY\90_SMART_55-SQUARE_A4_3_Partition Types.dwg, user

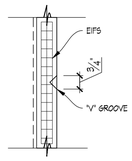

14 EIFS REVEAL
SCALE: 3" = 1'-0"

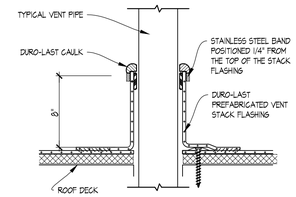

10 TYPICAL PIPE PENETRATION
SCALE: 1-1/2" = 1'-0"

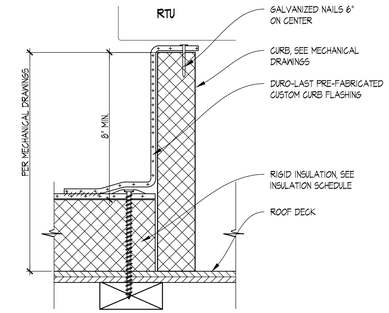

07 RTU CURB DETAIL
SCALE: 3" = 1'-0"

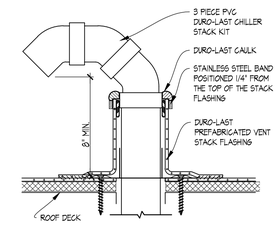

04 CONDENSER PIPE DETAIL
SCALE:1-1/2" = 1'-0"

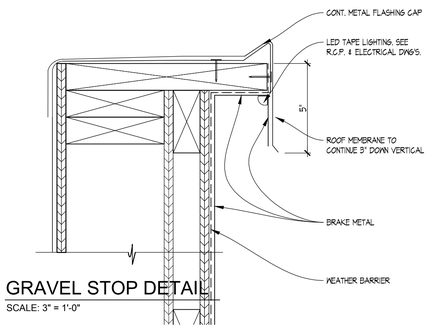

13 GRAVEL STOP DETAIL
SCALE: 3" = 1'-0"

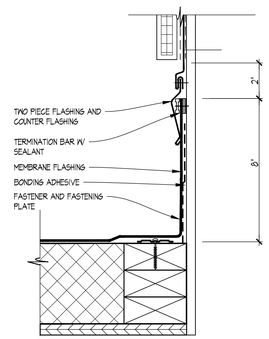

09 TERMINATION BAR DETAIL
SCALE: 3" = 1'-0"

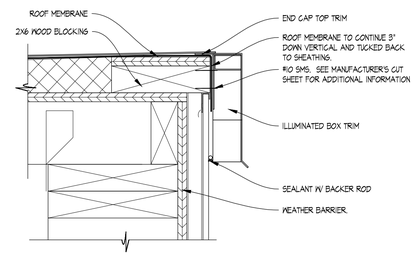

06 LIGHT BOX DETAIL
SCALE: 3" = 1'-0"

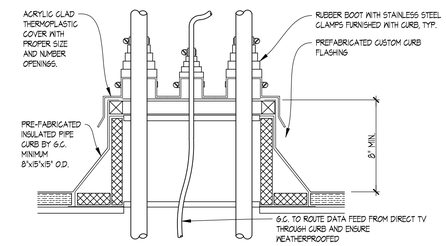

03 CONDENSER PIPE DETAIL
SCALE: 1-1/2" = 1'-0"

12 NOT USED

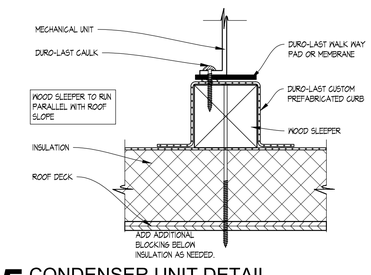

05 CONDENSER UNIT DETAIL
SCALE: 3" = 1'-0"

02 NOT USED

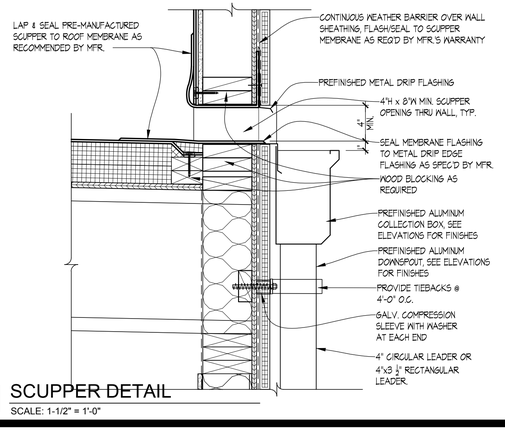

11 SCUPPER DETAIL
SCALE: 1-1/2" = 1'-0"

08 NOT USED

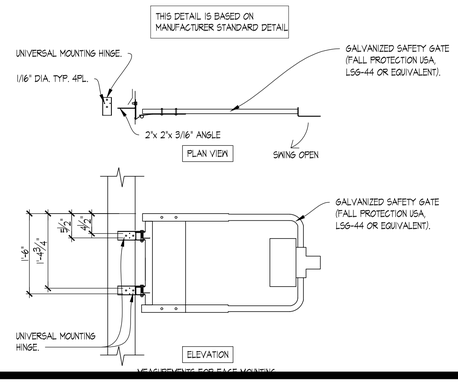

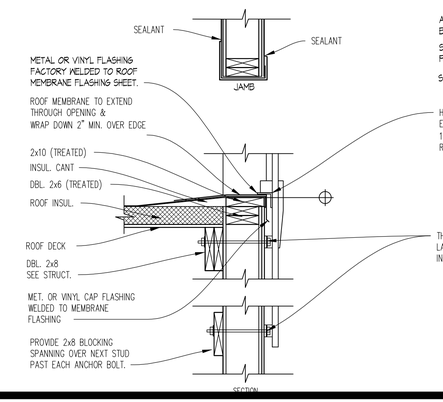

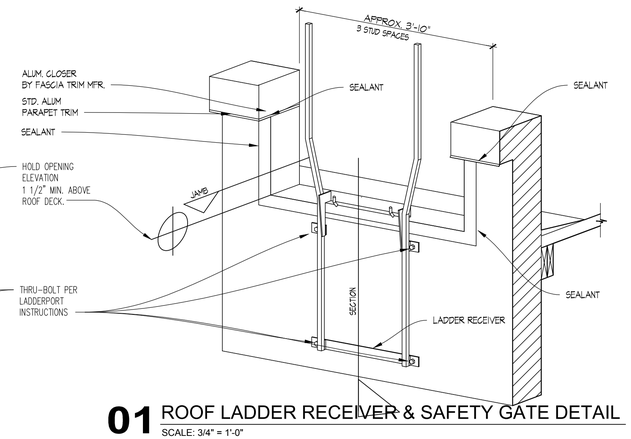

01 ROOF LADDER RECEIVER & SAFETY GATE DETAIL
SCALE: 3/4" = 1'-0"

SITE NUMBER:	12281
BASE MDL:	SMART 55 - SQUARE 2017
ASSET TYPE:	FRANCHISEE
CLASSIFICATION:	NEW
OWNER:	WENSPOK
BASE VERSION:	2017
UPGRADE CLASSIFICATION:	NEW BUILD
PROJECT YEAR:	2020
FURNITURE PACKAGE:	2016 V3
DRAWING RELEASE	JANUARY 2020

Russell C. Page ARCHITECTS
204 N. Division Street, Suite 'E'
Spokane, WA 99202
(509) 467-9748 Fx: (509) 467-9817

PROJECT TYPE: NEW
SMART 55 SQE

Wendy's®
HIGHWAY 95
PONDERAY, ID 83852

REV.	DATE	DESCRIPTION
△		
△		

ISSUE DATE: 5-28-2020
PROJECT NUMBER: 20-113
DRAWN BY: MEXXX
CHECKED BY: XXX

SEAL

LICENSED ARCHITECT AR 984311
8/14/20
RUSSELL C. PAGE
STATE OF IDAHO

SHEET NAME
ROOF DETAILS
ALT. BLADE LIGHTING

SHEET NUMBER
A4.4

8/10/2020, 11:01 AM, N:\Home\20-113 WENDYS PONDERAY\99_SMART_55-SQUARE_A4_4_Roof Details.dwg, user

ROOM FINISH SCHEDULE

SPACE DESIGNATION	ROOM	FLR: PORCELAIN TILE	FLR: SILIKAL ACRYLIC FLOORING	BASE: SILIKAL ACRYLIC	BASE: COVED RESILIENT	BASE: PORCELAIN TILE	WALLS (1): WOOD LOOK LVT	WALLS (1): PORCELAIN TILE	WALLS (1): LAMINATE PANELING	WALLS (1): PAINT	WALLS (1): FRP	CEILING (2): VINYL FABRIC	CEILING (2): SUSPENDED ACOUSTIC	CEILING (2): SUSPENDED VINYL	CEILING (2): DRYWALL-PAINTED	NOTES
100A	VESTIBULE	O				O		O	O	O					O	(1)(2)
101	DINING	O				O	O	O		O		O				(1)(2)
101A	HALLWAY	O				O		O		O		O	O			(1)(2)
102	MEN'S ROOM	O				O		O		O					O	(2)(3)(5)
103	WOMEN'S ROOM	O				O		O		O					O	(2)(3)(5)
104	SERVING AREA		O	O				O			O			O		(2)(3)(4)(8)
105	DRIVE-THRU		O	O							O			O		(2)(3)(4)(8)
106	KITCHEN		O	O							O			O		(2)(3)(4)(8)
107	PREPARATION AREA		O	O							O			O		(2)(3)(4)(8)
108	OFFICE		O	O							O			O		(2)(3)(4)(8)
109	UTILITY		O	O							O			O		(2)(3)(4)(8)
110	FREEZER										O					(6)
111	COOLER		O													(7)
112	DRY STORAGE		O											O		
113	DRIVE-THRU		O	O							O			O		(2)(3)(4)(8)

ROOM FINISH SCHEDULE NOTES

1. SEE SHEET A1.1 FOR WALL FINISHES IN THE DINING AREA.
2. SEE SHEET A1.2 FOR CEILING TYPES AND HEIGHTS.
3. PROVIDE LIQUID APPLIED WATERPROOFING ALONG WALLS. MINIMUM 24" HORIZONTAL AND 12" VERTICAL-SEE SPECIFICATIONS
4. SEE SHEET A7.2 FOR WALL FINISHES IN THE KITCHEN AREA
5. SEE SHEET A7.3 FOR WALL FINISHES IN THE RESTROOMS
6. FLOOR BY FREEZER/COOLER MANUFACTURER.
7. SS COVE BASE BY FREEZER/COOLER MANUFACTURER. GC TO INSTALL.
8. PROVIDE LIQUID APPLIED WATERPROOFING ACROSS ENTIRE FLOOR.

** SEE SHEET A6.1 FOR MATERIAL SPECS

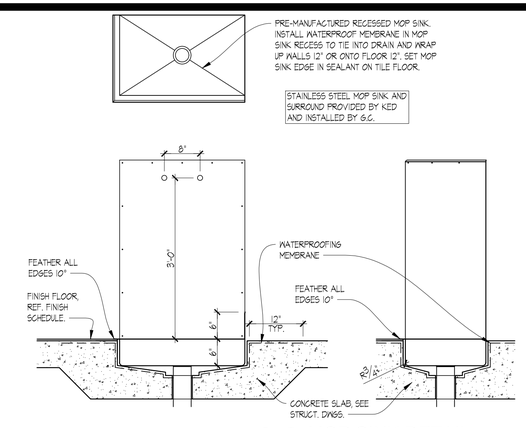

02 MOP SINK DETAIL
SCALE: 3/4"=1'-0"

SYMBOL LEGEND

SYMBOL	DESCRIPTION
-- / --	CEILING FINISHES, SEE FINISH SCHEDULE
-- / --	WALL FINISHES, SEE FINISH SCHEDULE
-- / --	BASE FINISHES, SEE FINISH SCHEDULE
-- / --	FLOOR FINISHES, SEE FINISH SCHEDULE
XX-X — XX-X	FLOORING TRANSITION
XX-X XXXX	FINISH TAGS SUBSTRATE GYP. 1/2" GYPSUM WALL BOARD C.B. 1/2" CEMENT BOARD BOARD PLY. 1/2" PLYWOOD

GENERAL NOTES

A. PROVIDE AND INSTALL CRACK ISOLATION MEMBRANE AT CONTROL JOINT LOCATIONS TILES. CRACK ISOLATION MEMBER TO BE "HYDRO-BAN" BY LATICRETE. REFER TO TCNA FOR JOINT STANDARDS. CONTACT LATICRETE AT (203) 376-8113. REFER TO STRUCTURAL SHEET S1.1, FOUNDATION PLAN.

B. PAINTER SHALL BE RESPONSIBLE FOR HARDWARE, SWITCH AND OUTLET COVERS, ETC. TO BE REMOVED AND REPLACED AFTER PAINTING.

C. RETOUCH OR REFINISH SURFACES DAMAGED BY SUBSEQUENT WORK. THE COST OF SUCH RESTORATION WORK SHALL BE BORNE BY THE CONTRACTOR.

D. PROVIDE PROPER PROTECTION AGAINST DAMAGE TO FURNITURE, ADJACENT FINISHED WORK, FLOORING, ETC. IF APPLICABLE.

E. FLOOR TRANSITIONS MUST BE FLUSH AND LEVEL. VINYL OR RUBBER REDUCER STRIPS NOT PERMITTED IN CUSTOMER AREA. NIBBLE SLAB AND FEATHER AS REQUIRED TO PROVIDE IMPERCEPTIBLE TRANSITION.

F. P-1 FINISH MAY BE SUBSTITUTED FOR WC-1 FINISH IN SOME HIGH HUMIDITY REGIONS. COORDINATE WITH WENDY'S REPRESENTATIVE.

G. REFER TO REFLECTED CEILING PLAN FOR ALL CEILING HEIGHTS.

(#) CODED NOTES:

1. 6" CONCRETE CURB, 1/2" LESS @ EXPOSED SIDES THAN IFS PANEL. PROVIDE BASE ON FACE OF CURB. SEE DETAIL 01/A5.2
2. PROVIDE WATERPROOFING MEMBRANE AS SCHEDULED AND AT ALL WET AREAS, TYP. REFER TO DETAIL 02/A5.1 FOR INSTALLATION OF MEMBRANE AT MOP SINK.
3. CONTINUE FLOOR TILE UNDER FIXTURES, CASEWORK AND FREESTANDING EQUIPMENT.
4. LINE OF LIGHT SHELF ABOVE
5. STAINLESS STEEL COVE BASE PROVIDED BY COOLER BOX PROVIDER
6. RAMP BY COOLER BOX PROVIDER
7. CP-B, STAINLESS STEEL CORNER GUARD, PROVIDED AND INSTALLED BY GC. REFERENCE FINISH SCHEDULE.
8. COOK CENTER CURB SET DIRECTLY ON SLAB. REFER TO DETAIL 8/A5.2.
9. BEVERAGE / CONDIMENT STAND CURB SET ON FLOOR FINISH.
10. FRONT COUNTER CURB SET DIRECTLY ON FLOOR FINISH.

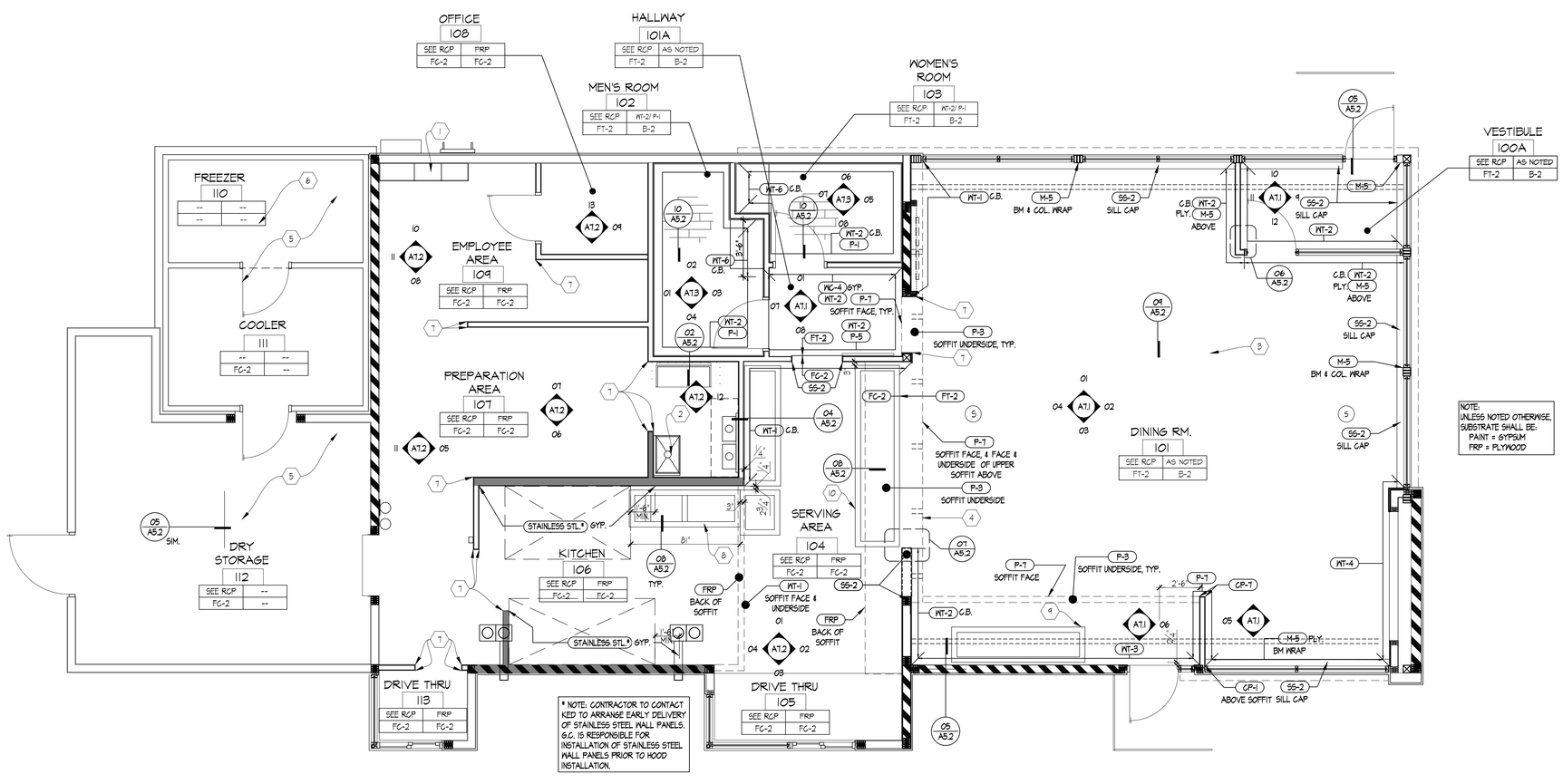

* NOTE: CONTRACTOR TO CONTACT KED TO ARRANGE EARLY DELIVERY OF STAINLESS STEEL WALL PANELS. G.C. IS RESPONSIBLE FOR INSTALLATION OF STAINLESS STEEL WALL PANELS PRIOR TO HOOD INSTALLATION.

01 FINISH PLAN
SCALE: 1/4"=1'-0"

SITE NUMBER:	12281
BASE MDL:	SMART 55 - SQUARE 2017
ASSET TYPE:	FRANCHISEE
CLASSIFICATION:	NEW
OWNER:	WENSPOK
BASE VERSION:	2017
UPGRADE CLASSIFICATION:	NEW BUILD
PROJECT YEAR:	2020
FURNITURE PACKAGE:	2016 V3
DRAWING RELEASE	JANUARY 2020

Russell C. Page ARCHITECTS
204 N. Division Street, Suite 'E'
Spokane, WA 99202
(509) 467-9748 Fx: (509) 467-9817

PROJECT TYPE: NEW SMART 55 SQE

Wendy's
HIGHWAY 95
PONDERAY, ID 83852

REV.	DATE	DESCRIPTION
1		
2		
-		
-		

ISSUE DATE: 5-28-2020
PROJECT NUMBER: 20-113
DRAWN BY: MEXXX
CHECKED BY: XXX

SEAL
LICENSED ARCHITECT AR 984311
8/14/20
RUSSELL C. PAGE
STATE OF IDAHO

SHEET NAME
FINISH PLAN
ALT. FLOOR FINISH

SHEET NUMBER
A5.1

8/10/2020, 11:02 AM, N:\Home\20-113 WENDY'S PONDERAY\30_SMART_55-SQUARE_A5_1_Finish Plan.dwg, user

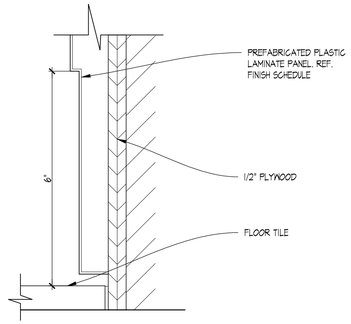

12 BLADE WALL DETAIL AT BASE
SCALE: 6"=1'-0"

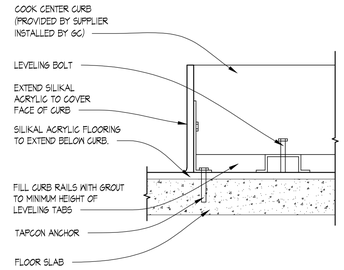

08 CURB AT FRONT COUNTER / COOK CENTER
SCALE: 3"=1'-0"

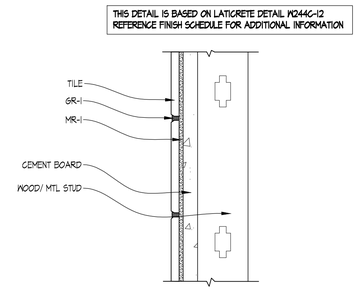

04 KITCHEN AREA TILE GROUT
SCALE: 6"=1'-0"

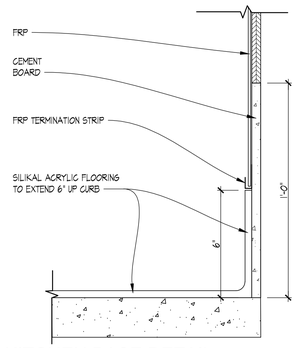

15 KITCHEN BASE DETAIL
SCALE: 3"=1'-0"

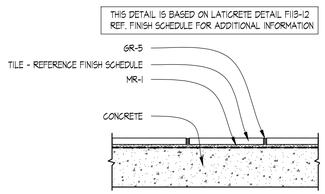

11 KITCHEN AREA - TILE GROUT
SCALE: 1 1/2"=1'-0"

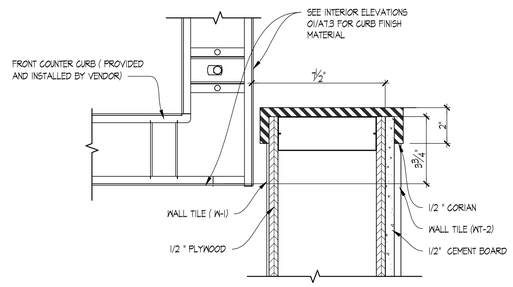

07 CURB AT FRONT COUNTER
SCALE; 3"= 1'-0"

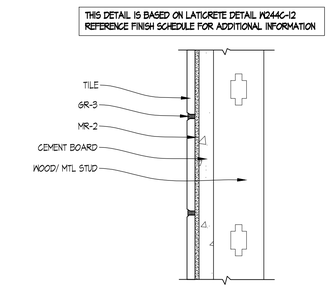

03 DINING AREA TILE GROUT
SCALE: 6"=1'-0"

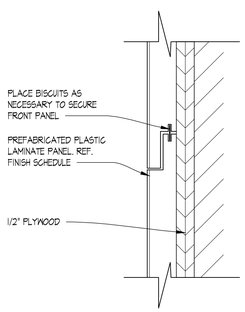

14 BLADE WALL DETAIL AT JOINT
SCALE: 6"=1'-0"

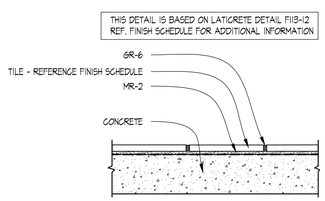

10 RESTROOMS - TILE GROUT
SCALE: 1 1/2"=1'-0"

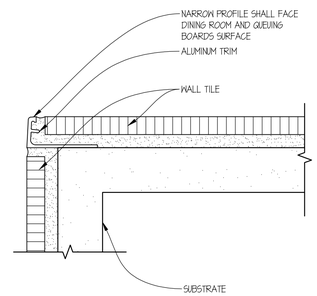

06 TRIM AT OUTSIDE CORNER
SCALE: 1'-0"=1'-0"

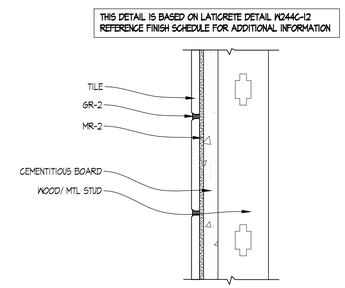

02 RESTROOMS TILE GROUT
SCALE: 6"=1'-0"

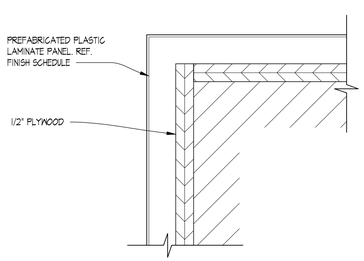

13 BLADE WALL DETAIL AT CORNER
SCALE: 6"=1'-0"

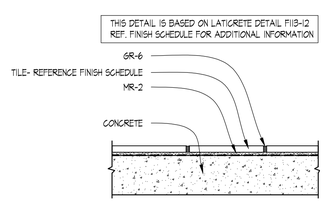

09 DINING AREA - TILE GROUT
SCALE: 1 1/2"=1'-0"

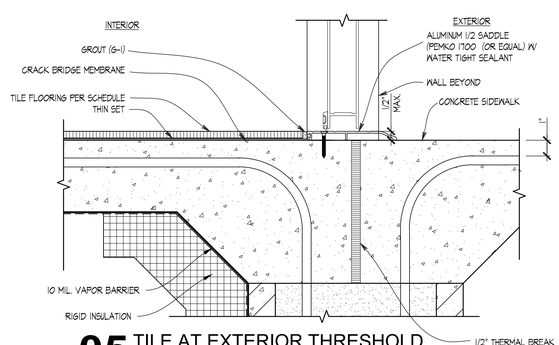

05 TILE AT EXTERIOR THRESHOLD
SCALE: 3"=1'-0"

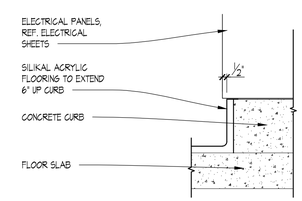

01 CONC. CURB AT ELECTRICAL PANEL
SCALE: 1 1/2"=1'-0"

SITE NUMBER:	12281
BASE MDL:	SMART 55 - SQUARE 2017
ASSET TYPE:	FRANCHISEE
CLASSIFICATION:	NEW
OWNER:	WENSPOK
BASE VERSION:	2017
UPGRADE CLASSIFICATION:	NEW BUILD
PROJECT YEAR:	2020
FURNITURE PACKAGE:	2016 V3
DRAWING RELEASE	JANUARY 2020

Russell C. Page ARCHITECTS
204 N. Division Street, Suite 'E'
Spokane, WA 99202
(509) 467-9748 Fx: (509) 467-9817

PROJECT TYPE: NEW
SMART 55 SQE

Wendy's®
HIGHWAY 95
PONDERAY, ID 83852

REV.	DATE	DESCRIPTION
△		
△		

ISSUE DATE: 5-28-2020
PROJECT NUMBER: 20-113
DRAWN BY: MD/XXX
CHECKED BY: XXX

SEAL
LICENSED ARCHITECT AR 984311
RUSSELL C. PAGE
STATE OF IDAHO

SHEET NAME
INTERIOR FINISH DETAILS

SHEET NUMBER
A5.2

8/10/2020, 11:05 AM, N:\Home\20-113 WENDYS PONDERAY\30_SMART_55-SQUARE_A5_2_Interior Finish Details.dwg, user

FINISH SCHEDULE

INTERIOR FINISH MATERIALS

FLOORS

FT-2	FLOOR TILE (DINING, RESTROOM)	**PRODUCT: CROSSVILLE; SWCR,12424UPS "CEMENTED RELATIONSHIPS"** SIZE: 24" x 24" GROUT: GR-7 MORTAR: MR-1 WATERPROOFING: WM-1; EXTEND 6" UP & 6" OUT PERIMETER WALLS (RESTROOM AREAS ONLY) JOINTS: 1/8"
FT-4	FLOOR TILE (BACK OF HOUSE)	**PRODUCT: CROSSVILLE; CROSS-TREAD (CTS); R001 "GREY MINGLE"** SIZE: 8" x 8" GROUT: GR-5 MORTAR: MR-1 WATERPROOFING: WM-1; EXTEND 6" UP & 6" OUT PERIMETER WALLS AND UNDER FULL EXTENT OF MOP SINK JOINTS: 1/8"
FC-1	QUARTZ FLOORING (BACK OF HOUSE)	**PRODUCT: SILIKAL; CUSTOM COLOR QUARTZ FLOORING; "WENDYS BLEND"** COLOR: 10% LGRY, 30% FWN, 30% NBRN, 30% SNDY FINISH: SILIKAL R-71
FC-2	QUARTZ FLOORING (BACK OF HOUSE)	PRODUCT: SILIKAL; CUSTOM COLOR QUARTZ FLOORING; "WENDYS UM BRIGHT BLEND"; MATCHES FT-3 COLOR: 10% FWN, 30% LGRY, 30% SGRY, 30% SNDY FINISH: SILIKAL R-71

WALL BASE

B-2	TILE BASE (DINING, RESTROOM)	PRODUCT: CROSSVILLE; MAINSTREET (PLANKED); AV213 "BISTRO BROWN" SIZE: 6" x 18" (ALTERNATE COVE BASE: 6" x 12") GROUT: GR-6 MORTAR: MR-1 WATERPROOFING: WM-1; EXTEND 6" UP & 6" OUT PERIMETER WALLS (RESTROOM AREAS ONLY) TRIM: (AT STOREFRONT CURBS ONLY) SCHLUTER; QUADEC w/ CORNER INSERTS (BRUSHED ANTIQUE BRONZE ANOD. ALUM.)
B-4	TILE COVE BASE (KITCHEN)	PRODUCT: CROSSVILLE; COVE BASE; R001 "GREY MINGLE"; CROSS SHEEN FINISH SIZE: 6" x 8"; PROVIDE COVE BASE CORNERS, LEFT, RIGHT, AND INSIDE AS REQUIRED GROUT: GR-5 MORTAR: MR-1 WATERPROOFING: WM-1; EXTEND 6" UP & 6" OUT PERIMETER WALLS JOINTS: 1/8"

WALLS

ACM-1	ALUMINUM COMPOSITE MATERIAL	*(SEE EXTERIOR FINISH SCHEDULE FOR PRODUCT INFORMATION)*
FRP	FRP (BACK OF HOUSE)	PRODUCT: MARLITE; FRP; CLASS C (CLASS A, WHERE REQUIRED) SIZE: 4' x 9' FINISH: PEBBLED; WHITE TRIM: WHITE PVC (STANDARD TRIM PROFILES TO MATCH)
WC-2	WALL COVERING (DINING)	PRODUCT: PARTERRE; LVT (LUXURY VINYL TILE) PLANKS; COLOR: "MERBAU" ALTERNATE: N/A SIZE: 6" x 24" CORNER PROTECTION: CP-1
WC-3	WALL COVERING (DINING)	PRODUCT: KOROSEAL; STYLE "DESERT SAND"; COLOR: "ROASTED PEPPER" ALTERNATE: P-2 (SEE PAINT SCHEDULE) CORNER PROTECTION: CP-3 (OPTIONAL)
WC-4	WALL COVERING (HALLWAY)	PRODUCT: CUSTOM PRINT; WENDY'S GRAPHIC MURAL; 72" WIDE ALTERNATE: P-2 (SEE PAINT SCHEDULE) CORNER PROTECTION: CP-3 (OPTIONAL)
WC-5	WALL COVERING (FEATURE WINDOW)	PRODUCT: MDC LEN-TEX; STYLE: "CORONADO LX"; COLOR: "WHITE" (3660CR/4734) ALTERNATE: P-3 (SEE PAINT SCHEDULE) CORNER PROTECTION: N/A
WT-1	WALL TILE (SERVICE AREA)	PRODUCT: CROSSVILLE; COLOR BY NUMBERS; TEA FOR TWO (#WT02.104120); COLOR: "GLOSS WHITE" SIZE: 4" x 8" PATTERN: RUNNING BOND GROUT: GR-1 MORTAR: MR-1 JOINTS: 1/8" TRIM: SCHLUTER; SCHIENE (AE: SATIN ANOD. ALUM.)
WT-2	WALL TILE (ENTRY, DINING, HALLWAY, RESTROOM)	PRODUCT: CROSSVILLE; COLOR : "WENDY'S SPECIAL IVORY" SWS1 SIZE: 12" x 24" PATTERN: STACK BOND GROUT: GR-2 MORTAR: MR-1 JOINTS: 1/8" TRIM: SCHLUTER; QUADEC w/ CORNER INSERTS (AE: SATIN ANOD. ALUM.)
WT-3	WALL TILE FREESTYLE, CONDIMENT	PRODUCT: CROSSVILLE; COLOR : "STORY TELLER, HERO" STY06 SIZE: 6" x 48" PATTERN: STACK BOND GROUT: GR-6 MORTAR: MR-1 JOINTS: 1/8" TRIM: SCHLUTER; QUADEC w/ CORNER INSERTS (AE: SATIN ANOD. ALUM.)
WT-4	FIREPLACE	PRODUCT: CROSSVILLE; COLOR : "STORY TELLER, FACT" STY04 SIZE: 6" x 48" PATTERN: STACK BOND GROUT: GR-5 MORTAR: MR-1 JOINTS: 1/8" TRIM: SCHLUTER; QUADEC w/ CORNER INSERTS (AE: SATIN ANOD. ALUM.)
WT-6	WALL TILE (RESTROOM)	PRODUCT: CROSSVILLE; "FROST CALIBRATED" AV241.11224UPSC SIZE: 12" x 24" PATTERN: STACK BOND GROUT: GR-7 MORTAR: MR-1 JOINTS: 1/8" TRIM (HORIZONTAL): SCHLUTER; SHEINE (SATIN NICKEL ANOD. ALUM.) TRIM (OUTSIDE CORNER): SCHLUTER; QUADEC w/ CORNER INSERTS (STAIN NICKEL ANOD. ALUM.)
CP-1	CORNER PROTECTION	PRODUCT: KOROGARD; ANODIZED ALUMINUM CORNER GUARD; 1/2" x 1/2"; COLOR: DARK BRONZE
CP-4	CORNER PROTECTION	PRODUCT: KOROGUARD; OC12 OUTSIDE CORNER GUARD; 1 1/2" x 1 1/2"; COLOR: MATCH L-1' (RED)
CP-7	CORNER PROTECTION	PRODUCT: KOROGARD OC12, OUTSIDE CORNER GUARD; 1/4" x 1/4"; COLOR: CLEAR ANODIZED ALUMINUM
CP-8	CORNER PROTECTION (BACK OF HOUSE)	PRODUCT: STAINLESS STEEL CORNER GUARD SIZE: 2" X 2" WITH 1/4" OR 3/8" SLIGHT BEND TOWARDS WALL AT EACH LEG MATERIAL: MIN 18GA. TYPE 304 #4 SATIN STAINLESS STEEL NOTE: INSTALL WITH "TIGHTBOND PROVANTAGE" HEAVY DUTY CONSTRUCTION ADHESIVE (OR APPROVED EQUAL)

GROUT, MORTAR, & WATERPROOFING MEMBRANE

GR-1	GROUT	PRODUCT: LATICRETE; PERMACOLOR (25 LBS.) COLOR: "BRIGHT WHITE" #44 JOINTS: 1/8"
GR-2 / GR-3	GROUT	PRODUCT: LATICRETE; PERMACOLOR (25 LBS.) COLOR: "MUSHROOM" #39 JOINTS: 1/8"
GR-5	GROUT	PRODUCT: LATICRETE; #2000 SPECTRALOCK GROUT IG #4 COMMERCIAL LIQUID (S-2000C-SL-03) & SPECTRALOCK PART C (1245-0409-2); PART A&B, 4 PART C COLOR: "RAVEN" #45 JOINTS: 1/8"
GR-6	GROUT	PRODUCT: LATICRETE; PERMACOLOR (25 LBS.) COLOR: "RAVEN" #45 JOINTS: 1/8"
GR-7	GROUT	PRODUCT: LATICRETE; PERMACOLOR (25 LBS.) COLOR: "MOCHA" #35 JOINTS: 1/8"
MR-1	MORTAR	PRODUCT: LATICRETE; TITANIUM THINSET MORTAR (#257)
MR-2	MORTAR	PRODUCT: LATICRETE; 4-XLT; 4XLT GRAY POLYMER THINSET 50LB BAG
WM-1	WATERPROOFING MEMBRANE	PRODUCT: LATICRETE; HYDROBAN (9255-0005-2)

CEILING

CT-1	CEILING TILE (KITCHEN / FOOD PREP AREAS)	PRODUCT: ARMSTRONG VINYLCLAD SQUARE LAY-IN; BP670: 24" x 48" x 1/2"; COLOR: WHITE GRID: PRELUDE 15/16", WHITE
CT-2	CEILING TILE (DINING ROOM PERIMETER)	PRODUCT: ARMSTRONG; ULTIMA 1911: 24" x 24" x 3/4" OR ULTIMA 1914: 24" x 48" x 3/4"; COLOR: WHITE GRID: PRELUDE 15/16", WHITE
CT-4	CEILING TILE (SERVING AREA; CONDIMENT AREA (ONLY IF REQUIRED BY HEALTH DEPT.))	PRODUCT: ARMSTRONG VINYLCLAD SQUARE LAY-IN; BP671: 24" x 24" x 1/2"; COLOR: WHITE GRID: PRELUDE 15/16", WHITE
CT-5	CEILING TILE (KITCHEN FRYER AREA; WASHABLE NON-COMBUSTABLE)	PRODUCT: ARMSTRONG; CERAMAGUARD 605: 24" X 48" X 5/8"; COLOR: WHITE GRID: PRELUDE 15/16", WHITE SURFACE FINISH: SCRUBBABILE FACTORY-APPLIED PAINT FINISH (WITHIN 18" OF GREASE HOODS ONLY, WHERE NON-COMBUSTABLE MATERIALS ARE REQUIRED)

FINISH SCHEDULE

LAMINATE

L-1	PLASTIC SHEET WALLCOVERING	PRODUCT: KOROGARD PROTECTIVE WALL COVERINGS; COLOR: REGIMENTAL RED; 0.060MM
L-2	LAMINATE	PRODUCT: WILSONART; COLOR: "AMBER CHERRY" (#7919-38-107)
L-3	LAMINATE	PRODUCT: WILSONART; COLOR: "REGIMENTAL RED" (#D12X-60)

SOLID SURFACE

SS-1	SOLID SURFACE	PRODUCT: CORIAN; "WENDY'S CUSTOM RED"
SS-2	SOLID SURFACE	PRODUCT: CORIAN; "CANYON"
SS-3	SOLID SURFACE	PRODUCT: CORIAN; "LINEN"

MISCELLANEOUS

TP-1	TOILET PARTITIONS & DOORS	FINISH: SATIN FINISH STAINLESS STEEL
WS-1	DINING ROOM WINDOW SHADES (OPTIONAL)	PRODUCT: ROLL-A-SHADE SIGNATURE SERIES 5% OPENNESS; COLOR: 1241 CHARCOAL/BRONZE SIZE: 4" FASCIA AND BRACKETS TO MATCH STOREFRONT NOTE: INCLUDE STAINLESS STEEL BEADED ADJUSTMENT CHAIN WITH SAFETY TENSION DEVICE

EXTERIOR FINISH MATERIALS

STOREFRONT / GLAZING

SF-2	STOREFRONT - CLEAR ANNODIZED	PRODUCT: US ALUMINUM: IT451/451; "CLEAR" ANODIZED ALUMINUM ALTERNATE: KAWNEER TRIFAB VG 451T/451; #14 "CLEAR" ANODIZED ALUMINUM EQUALS BY: TUBELITE & OLDCASTLE
	STOREFRONT (IMPACT RATED)	PRODUCT: US ALUMINUM IT600; "CLEAR" ANODIZED ALUMINUM ALTERNATE: KAWNEER IR 501UT; #14 "CLEAR" ANODIZED ALUMINUM EQUALS BY: TUBELITE & OLDCASTLE
G-1	1" INSULATED GLASS IECC CLIMATE ZONES 4-8 (NORTH)	OPTION #1: GUARDIAN GLASS (HEAT STRENGTHENED AS REQUIRED, TEMPERED WHERE INDICATED) OUTBOARD LITE: GUARDIAN "SN 68" (#2) ON 1/4" CLEAR INBOARD LITE: GUARDIAN 1/4" CLEAR SPACE: 1/2" AIR
		OPTION #2: VITRO (PPG) ARCHITECTURAL GLASS (HEAT STRENGTHENED AS REQUIRED, TEMPERED WHERE INDICATED) OUTBOARD LITE: VITRO ARCHITECTURAL GLASS "SOLARBAN 60" (#2) ON 1/4" CLEAR GLASS INBOARD LITE: VITRO ARCHITECTURAL GLASS 1/4" CLEAR SPACE: 1/2" AIR"
	1" INSULATED GLASS IECC CLIMATE ZONES 1-3 (SOUTH)	OPTION #1: GUARDIAN GLASS (HEAT STRENGTHENED AS REQUIRED, TEMPERED WHERE INDICATED) OUTBOARD LITE: GUARDIAN "SNX 51/33" (#2) ON 1/4" CLEAR GLASS INBOARD LITE: GUARDIAN 1/4" CLEAR SPACE: 1/2" AIR
		OPTION #2: VITRO (PPG) ARCHITECTURAL GLASS (HEAT STRENGTHENED AS REQUIRED, TEMPERED WHERE INDICATED) OUTBOARD LITE: VITRO ARCHITECTURAL GLASS "SOLARBAN 67" (#2) ON 1/4" VITRO ARCHITECTURAL GLASS "SOLEXIA" INBOARD LITE: VITRO ARCHITECTURAL GLASS 1/4" CLEAR SPACE: 1/2" AIR
		OPTION #3: GUARDIAN GLASS (HEAT STRENGTHENED AS REQUIRED, TEMPERED WHERE INDICATED) OUTBOARD LITE: GUARDIAN "SNX 62/27" (#2) ON 1/4" GREEN GLASS INBOARD LITE: GUARDIAN 1/4" CLEAR SPACE: 1/2" AIR
	IMPACT-RATED ALTERNATE	PRODUCT: LAMINATED GLASS OUTBOARD LITE: SEE ABOVE INBOARD LITE #3: INSIDE LITE: LAMINATED: 3/16"" CLEAR LAMINATION: DUPONT BUTACITE 0.090"/0.100" 3/16" CLEAR (ARCHITECT TO VERIFY REQUIRED THICKNESS) INBOARD LITE #4: INSIDE LITE: LAMINATED: 3/16"" CLEAR" SPACE: 1/2" AIR NOTE: COORDINATE TOTAL THICKNESS WITH STOREFRONT / CURTAIN WALL SYSTEM
G-3	1/4" CLEAR GLASS	PRODUCT: 1/4" CLEAR FLOAT GLASS; EQUALS THRU GUARDIAN & VITRO (PPG) ARCHITECTURAL GLASS (HEAT STRENGTHENED AS REQUIRED, TEMPERED WHERE INDICATED)
G-5	1" INSULATED GLASS (FROSTED) IECC CLIMATE ZONES 4-8 (NORTH)	OPTION #1: GUARDIAN GLASS (HEAT STRENGTHENED AS REQUIRED, TEMPERED WHERE INDICATED) OUTBOARD LITE: GUARDIAN "SN 68" (#2) ON 1/4" CLEAR GLASS INBOARD LITE: GUARDIAN "SATIN DECO" (ACID ETCHED) (#3) ON 1/4" "EXTRACLEAR" SPACE: 1/2" AIR
		OPTION #2: VITRO (PPG) ARCHITECTURAL GLASS (HEAT STRENGTHENED AS REQUIRED, TEMPERED WHERE INDICATED) OUTBOARD LITE: VITRO ARCHITECTURAL GLASS "SOLARBAN 60" (#2) ON 1/4" CLEAR GLASS INBOARD LITE: WALKER TEXTURES "VELOUR" (ACID ETCHED) (#3) ON 1/4" CLEAR GLASS SPACE: 1/2" AIR
	1" INSULATED GLASS (FROSTED) IECC CLIMATE ZONES 1-3 (SOUTH)	OPTION #1: GUARDIAN GLASS (HEAT STRENGTHENED AS REQUIRED, TEMPERED WHERE INDICATED) OUTBOARD LITE: GUARDIAN "SNX 51/33" (#2) ON 1/4" CLEAR GLASS INBOARD LITE: GUARDIAN "SATIN DECO" (ACID ETCHED) (#3) ON 1/4" "EXTRACLEAR" SPACE: 1/2" AIR
		OPTION #2: VITRO (PPG) ARCHITECTURAL GLASS (HEAT STRENGTHENED AS REQUIRED, TEMPERED WHERE INDICATED) OUTBOARD LITE: VITRO ARCHITECTURAL GLASS "SOLARBAN 67" (#2) ON 1/4" VITRO ARCHITECTURAL GLASS "SOLEXIA" INBOARD LITE: WALKER TEXTURES "VELOUR" (ACID ETCHED) (#3) ON 1/4" CLEAR GLASS SPACE: 1/2" AIR
		OPTION #3: GUARDIAN GLASS (HEAT STRENGTHENED AS REQUIRED, TEMPERED WHERE INDICATED) OUTBOARD LITE: GUARDIAN "SNX 62/27" (#2) ON 1/4" GREEN GLASS INBOARD LITE: GUARDIAN "SATIN DECO" (ACID ETCHED) (#3) ON 1/4" "EXTRACLEAR" SPACE: 1/2" AIR
PUW	PICK-UP WINDOW	FINISH: TO MATCH STOREFRONT

METALS

M-1	METAL SIDING	PRODUCT: TBD COLOR: TBD SIZE: TBD SEALANT: TBD
M-2	CORRUGATED METAL PANEL	PRODUCT: ALCOA; REYNOLUX; COLOR: CLEAR ANODIZED; PRE-FINISHED SIZE: 7.2" RIB PANEL, .032" THICKNESS
M-3	DRIP EDGE	PRODUCT: EXCEPTIONAL METALS SPECIFICATIONS: 24 GA GALVALUME STEEL COLOR: PRE-FINISHED, "BRIGHT RED"
M-4	PARAPET CAP	PRODUCT: EXCEPTIONAL METALS SPECIFICATIONS: 24 GA GALVALUME STEEL COLOR, MILL FINISH, "SILVER METALLIC"
M-5	BRAKE METAL	PRODUCT: BRAKE METAL COLOR: CLEAR ANODIZED
M-7	PARAPET CAP	PRODUCT: EXCEPTIONAL METALS COLOR: "CUSTOM DARK GREY"

ACM SYSTEM

ACM-1	ALUM. COMPOSITE MATERIAL/ OR EQUIVALENT METAL PANEL PRODUCT	PRODUCT: ALCOA, REYNOBOND PE, 4MM, ROUTE & RETURN COLOR: PRE-FINISHED, COLORWELD 500, COLOR: "DARK GREY." ALTERNATE: ALUCOBOND PE; 1" ROUTE & RETURN COLOR: MATCH ALCOA SPEC (ABOVE)
M-7	ALUM. COMPOSITE MATERIAL/ OR EQUIVALENT METAL PANEL PRODUCT	PRODUCT: ALCOA, REYNOBOND PE, 4MM, ROUTE & RETURN COLOR: PRE-FINISHED, COLORWELD 300, "BRITE RED", (RB4CW38R) ALTERNATE: ALUCOBOND PE; 1" ROUTE & RETURN COLOR: PVDF-3; "RED FIRE COOL", GLOSS LEVEL: 30

FINISH SCHEDULE

MASONRY

	FACE BRICK	OPTION #1: BOWERSTON SHALE COMPANY SERIES: "OLD ENGLISH" (MODULAR)
		OPTION #2: GLEN-GARY SERIES: "OLDE DETRIOT" (MODULAR)
		OPTION #3: BELDEN SERIES: "BELCREST" 560A (MODULAR)
	MORTAR	PRODUCT: CEMEX RICHCOLOR 56-H "LIMESTONE" (OR APPROVED EQUAL)

EXTERIOR MISC.

BR-1	BOLLARD SLEEVE	PRODUCT: PAWLING, PROTEK COLOR: SAFETY YELLOW SIZE: 8" DIA, 48" HEIGHT NOTE: CONTACT HJC
	CONCRETE FINISH (PATIO)	PRODUCT: SCOFIELD; LITHOCHROME COLOR HARDENER; STAMPED CONCRETE COLOR: SCOFIELD; LITHOCHROME: A-33 "CLASSIC GREY" FINISH: ARCHITECTURAL CONCRETE DESIGN; 24" x 24" SLATE, LIGHT TEXTURE (OR APPROVED EQUAL) SEALER: SCOFIELD, CEMENTONE; CLEAR SEALER
	CONCRETE FINISH (PUW, TRASH ENCLOSURE; ORDER STATION CANOPY)	PRODUCT: SCOFIELD COLOR (OPTIONAL): SCOFIELD; LITHOCHROME: A-33 "CLASSIC GREY" SEALER: SCOFIELD; CEMENTONE; CLEAR SEALER

EXTERIOR FURNITURE

BL-1 CF-1	PATIO: TABLE AND CHAIRS	PRODUCT: EMU -DESIGNER: CENTRO RICERCHE EMU TABLES: WENDY'S 36" SQ WITH UMBRELLA HOLE #EW3636-22 (4 TOP) OR WENDY"S 36" X 28" (2 TOP) #EW3628-22; FINISH: AIRON (ZG) CHAIRS: WENDY'S KHALI SIDE CHAIR #E338-22; WENDY'S KHALI ARMCHAIR #E339-22; FINISH: AIRON (ZG) NOTE: MINIMUM OF 1 TABLE MUST BE ADA ACCESSIBLE
CF-3	PATIO: TABLE AND CHAIRS	PRODUCT: RECYCLE DESIGN - INFINITY SERIES FRAME: POWDER COAT GRAY, SLATS: CEDAR HDPE TABLE #1: W.INF.PT.3636.4T (36" 4 SEAT) TABLE #2: W.INF.PT.4141.4T (41" 4 SEAT) TABLE #3: W.INF.PT.4141.6T (41" 6 SEAT) TABLE #4: W.INF.PT.3029.2T (30" 2 SEAT) TABLE #5: W.INF.PT.2429.2T (24" 2 SEAT) TABLE #6: W.INF.RT.7612.72" 3 SEAT RAIL) ADA TABLE #1: W.INF.PT.4141.3T ADA (41" 3 SEAT, ADA) ADA TABLE #2: W.INF.PT.4141.5T ADA (41" 5 SEAT, ADA) ADA TABLE #3: W.INF.PT.4229.4T ADA (42" 4 SEAT, ADA, WALL) BENCH: W.INF.BE.6016 SIDE TABLE: W.INF.ST.2212 NOTE: MINIMUM OF 1 TABLE MUST BE ADA ACCESSIBLE
	PATIO: TABLE AND CHAIRS	PRODUCT: WAUSAU TILE COLOR: BROWN; TABLE: TF31252 (4 SEAT) ADA TABLE: TF32187 (3 SEAT)
	PATIO: UMBRELLA	PRODUCT: EMU: UMBRELLA SOURCE; FIBERGLASS MARKET UMBRELLAS SIZE: 6-1/2' x 6-1/2' SQUARE; OR 9' x 9' OCTAGONAL
	PATIO: UMBRELLA	PRODUCT: RECYCLE DESIGN FABRIC: SUNBRELLA (JOCKEY RED, COLOR GRADE B) OPTION #1: W.INF.UMB.732 (OCTAGONAL) OPTION #2: W.INF.UMB.772 (HALF-WALL) OPTION #3: W.INF.UMB.762 (SQUARE)
	PATIO: UMBRELLA	PRODUCT: WAUSAU TILE: FABRIC: RED; 8' VALANCE UMBRELLA (TF3316) FABRIC: RED SIZE: 8' VALANCE UMBRELLA (TF3316)
	PATIO: TRASH RECEPTACLE	PRODUCT: EMU: DESIGNER: CENTRO RICERCHE MODEL: WENDY'S LITTER BIN #EWBIN-22 FINISH: AIRON (ZG) E-COATED POWDER FINISH NOTE: RECOMMENDED TO BE BOLTED DOWN. LINER NOT INCLUDED, COMTAIBLE WITH RUBBERMAID 3567 RIGID LINER
	PATIO: TRASH RECEPTACLE	PRODUCT: RECYCLE DESIGN: INFINITY SERIES (W.INF.WR.035) FINISH: CEDAR HDPE, STAINLESS STEEL, GRAY; NOTE: LINER SOLD SEPARATE FROM KES
	PATIO: TRASH RECEPTACLE	PRODUCT: WAUSAU TILE: TF1020; COLOR: BROWN
	PATIO: RAILING	PRODUCT: PREFINISHED ALUMINUM; BLACK GLOSS; FORTRESS RAILING, AL 13 SERIES (OR EQUAL)
	PATIO: ACCESSORIES	PRODUCT: RECYCLE DESIGN (PREFERRED): INFINITY SERIES FRAME: POWDER COAT GRAY, SLATS: CEDAR HDPE SMOKE STAND: W.INF.SMST.363 PLANTERS: W.INF.PLANT.1622/2422 BIKE STAND: W.INF.BIKE.3618

NOTES:
1. FURNITURE SUPPLIED BY KED IS SUBJECT TO CHANGE. REFER TO QUOTATION FROM KED FOR SUPPLIER INFORMATION
2. REFER TO PAINT SCHEDULE FOR PAINT INFORMATION ON A6.2

SITE NUMBER:	12281
BASE MDL:	SMART 55 - SQUARE 2017
ASSET TYPE:	FRANCHISEE
CLASSIFICATION:	NEW
OWNER:	WENSPOK
BASE VERSION:	2017
UPGRADE CLASSIFICATION:	NEW BUILD
PROJECT YEAR:	2020
FURNITURE PACKAGE:	2016 V3
DRAWING RELEASE	JANUARY 2020

Russell C. Page ARCHITECTS
204 N. Division Street, Suite 'E'
Spokane, WA 99202
(509) 467-9748 Fx: (509) 467-9817

PROJECT TYPE: NEW
SMART 55 SQE

Wendy's
HIGHWAY 95
PONDERAY, ID 83852

REV.	DATE	DESCRIPTION
△		
△		

ISSUE DATE: 5-28-2020
PROJECT NUMBER: 20-113
DRAWN BY: MDXXX
CHECKED BY: XXX

SEAL

LICENSED ARCHITECT AR 984311
RUSSELL C. PAGE
STATE OF IDAHO

SHEET NAME
FINISH SCHEDULE

SHEET NUMBER
A6.1

8/10/2020, 11:05 AM, N:\Home\20-113 WENDYS PONDERAY\30_SMART_55-SQUARE_A6_1_Finish Schedule.dwg, user

PAINT SCHEDULE

EXTERIOR

COLOR		SHERWIN WILLIAMS	BENJAMIN MOORE	PPG
PEX-1	EXTERIOR PAINT- WENDYS DARK BRONZE	SHERWIN WILLIAMS: BRONZETONE CUSTOM COLORS: "MISSISSIPPI BRONZE"	BENJAMIN MOORE: P23-60 "BRONZETONE"	PPG: 1002-7 "PHANTOM MIST"
PEX-2	EXTERIOR PAINT- WENDY'S EXTERIOR RED	SHERWIN WILLIAMS: SW 6321 "RED BAY"	BENJAMIN MOORE: PM-18 "HERITAGE RED"	PPG: 13-16 "BLAZE"
PEX-3	PRE-FINISHED- DARK BRONZE	SIGN CABINETS - MATCHES PEX-1 NO SUBSTITUTIONS AVAILABLE (THROUGH SIGN VENDOR ONLY)	SIGN CABINETS - MATCHES PEX-1 NO SUBSTITUTIONS AVAILABLE (THROUGH SIGN VENDOR ONLY)	SIGN CABINETS - MATCHES PEX-1 NO SUBSTITUTIONS AVAILABLE (THROUGH SIGN VENDOR ONLY)
PEX- 4	EXTERIOR PAINT- WENDY'S GRAY	SHERWIN WILLIAMS: SW 7022 "ALPACA"	BENJAMIN MOORE: OC-28 "COLLINGWOOD"	PPG: 1025 3 "WHISKERS"
PEX-6	PRE-FINISHED- DARK BRONZE	WALK-IN COOLER / FREEZER - MATCHES PEX-1 PRE-FINISHED BY MANUFACTURER, NO SUBSTITUTIONS	WALK-IN COOLER / FREEZER - MATCHES PEX-1 PRE-FINISHED BY MANUFACTURER, NO SUBSTITUTIONS	WALK-IN COOLER / FREEZER - MATCHES PEX-1 PRE-FINISHED BY MANUFACTURER, NO SUBSTITUTIONS
PEX-7	EXTERIOR PAINT- BROWN	SHERWIN WILLIAMS: SW 6061 "TANBARK"	BENJAMIN MOORE: 1223 "BRENTWOOD"	PPG: PPG 160-07 "SOUTHERN WOOD"
PEX-8	EXTERIOR PAINT- BROWN	SHERWIN WILLIAMS: SW 6068 "BREVITY BROWN"	BENJAMIN MOORE: 1224 "COYOTE TRAIL"	PPG: PPG 16 23 "TAMPICO BROWN"
PEX-9	EXTERIOR PAINT- SILVER - SATIN	SHERWIN WILLIAMS: "SILVER BRIGHT" ALUMINUM PAINT	BENJAMIN MOORE: P22 "SILVER URETHANE ALKYD"	PPG: PPG-6-230 "BRIGHT ALUMINUM"
PEX-10	EXTERIOR PAINT- POWDER COAT "BLACK"	SHERWIN WILLIAMS: SW 6258 "TRICORN BLACK"	BENJAMIN MOORE: HC-19 "BLACK MAGIC"	PPG: PPG 1001-7 "BLACK MAGIC"
PEX-11	EXTERIOR PAINT- LIGHT TAN	SHERWIN WILLIAMS: SW 6109 "HOPSACK"	BENJAMIN MOORE: 1055 "ALCONQUIN TRAIL"	PPG: PPG 1085 5 "SAUTEED MUSHROOM"
PEX-12	EXTERIOR PAINT- DARK GRAY	SHERWIN WILLIAMS: SW 7674 "PEPPERCORN"	BENJAMIN MOORE: 2121-10 "GRAY"	PPG: PPG 1001-6 "KNIGHTS ARMOUR"

EXTERIOR PRIMER

BASE	SHEEN	SHERWIN WILLIAMS	BENJAMIN MOORE	PPG
STUCCO / EIFS	SATIN	SHERWIN WILLIAMS- PRIME: LOXON MASONRY FINISH: A-100 EXTERIOR LATEX SATIN	BENJAMIN MOORE- PRIME: 023 FRESH START ALL PURPOSE PRIMER FINISH: P23-60 DTM ACRYLIC LOW LUSTER ENAMEL	PPG- PRIME:PPG SEAL GRIP 17-921 ACRYLIC UNIVERSAL PRIMER FINISH: PPG SPEEDHIDE 6-2045XI EXTERIOR SATIN ACRYLIC
METAL RAILING	SEMI-GLOSS	SHERWIN WILLIAMS- PRIME: PROCRYL UNIVERSAL METAL FINISH: SHER-CRYL HPA (SEMI-GLOSS)	BENJAMIN MOORE- PRIME: HP29 METAL PRIMER FINISH: DTM ACYRLIC SEMI-GLOSS ENAMEL	PPG- PRIME: PPG PITT-TECH 90-712 ACYRLIC METAL PRIMER FINISH: SPEEDHIDE EXTERIOR 100% ACRYLIC LATEX SEMI-GLOSS
WOOD	SATIN	SHERWIN WILLIAMS- PRIME: A100 ALKYD EXTERIOR WOOD PRIMER FINISH: A-100 EXTERIOR LATEX SATIN	BENJAMIN MOORE- PRIME: 023 FRESH START ALL PURPOSE PRIMER FINISH: P23-60 DTM ACRYLIC LOW LUSTER ENAMEL	PPG- PRIME: PPG SPEEDHIDE 6-609 EXTERIOR ACRYLIC WOOD PRIMER FINISH: PPG SPEEDHIDE 6-2045XI EXTERIOR SATIN ACRYLIC
PLASTIC (HERITAGE II)	SATIN	SHERWIN WILLIAMS- PRIME: MULTI-PURPOSE LATEX PRIMER FINISH: SHER-CRYL HPA (SEMI-GLOSS)	BENJAMIN MOORE- PRIME: 023 FRESH START ALL PURPOSE PRIMER FINISH: P23-60 DTM ACRYLIC LOW LUSTER ENAMEL	PPG- PRIME: PPG SEAL GRIP 17-921 ACRYLIC UNIVERSAL PRIMER FINISH: PPG SPEEDHIDE 6-2045XI EXTERIOR SATIN ACRYLIC
WROUGHT IRON	GLOSS	SHERWIN WILLIAMS- PRIME: PROCRYL UNIVERSAL METAL FINISH: SHER-CRYL HPA (GLOSS)	BENJAMIN MOORE- PRIME: P06-20 RED METAL PRIMER FINISH: P22-21 URETHANE ALKYD GLOSS ENAMEL	PPG- PRIME: PPG PITT-TECH 90-712 ACRYLIC METAL PRIMER FINISH: PPG PITT-TECH PLUS 90-1306 SAFETY RED DTM GLOSS
ALUMINUM / METAL STOREFRONT PRIMER				
ALUMINUM STOREFRONT	GLOSS	RECOMMENDED TO USE PPG SHERWIN WILLIAMS- PRIME: PROCRYL UNIVERSAL METAL PRIMER FINISH: SHER-CRYL HPA (SEMI-GLOSS OR GLOSS)	RECOMMENDED TO USE PPG BENJAMIN MOORE- PRIME: SELF PRIME WITH P23-60 FINISH: P23-60 DTM ALKYD LOW LUSTRE ENAMEL	PPG- COLOR: CORAFLON "STATUARY BROWN" (AD58022030) PRIME: CORAFLON ADS EPOXY PRIMER, ADS 572/574 FINISH: CORAFLON ADS ALTERNATE FINISH: PITTHANE ULTRA (COORD. PRIME WITH MFG)
METAL	SATIN	RECOMMENDED TO USE PPG SHERWIN WILLIAMS- PRIME: PROCRYL UNIVERSAL METAL PRIMER FINISH: SHER-CRYL HPA (SEMI-GLOSS)	RECOMMENDED TO USE PPG BENJAMIN MOORE- PRIME: SELF PRIME WITH P23-60 FINISH: P23-60 DTM ALKYD LOW LUSTRE ENAMEL	PPG- COLOR: CORAFLON "STATUARY BROWN" (AD58022030) PRIME:CORAFLON ADS EPOXY PRIMER, ADS 572/574 FINISH: CORAFLON ADS ALTERNATE FINISH: PITTHANE ULTRA (COORD. PRIME WITH MFG)
PEX-9 PRIMER				
METAL	SATIN	SHERWIN WILLIAMS- PRIME: PROCRYL UNIVERSAL METAL PRIMER FINISH: SILVER-BRITE ALUMINUM PAINT (2 COATS) #B59511	BENJAMIN MOORE- PRIME: P06 ALKYD METAL PRIMER	PPG- PRIME: PPG PITT-TECH 90-712 ACRYLIC METAL PRIMER FINISH: PPG PITT-TECH 90-474 DTM SATIN ACRULIC ENAMEL
WOOD	SATIN	SHERWIN WILLIAMS- PRIME: A100 ALKYD WOOD PRIMER FINISH: SILVER-BRITE ALUMINUM PAINT (2 COATS) #B59511	BENJAMIN MOORE- PRIME: P046 SUPERIOR PRIMER	PPG- PRIME: PPG SPEEDHIDE 6-609 EXTERIOR ACRYLIC METAL PRIMER FINISH: PPG SPEEDHIDE 6-2045XL EXTERIOR SATIN ACRYLIC

INTERIOR

COLOR		SHERWIN WILLIAMS	BENJAMIN MOORE	PPG
P-1	P-1 - WENDYS BEIGE - EGGSHELL	SHERWIN WILLIAMS: SW7036 "ACCESSIBLE BEIGE"	BENJAMIN MOORE: OC-15 "BABY FAWN"	PPG: PPG 1024-4 "MOTH GRAY"
P-2	PAINT - WENDY'S INTERNATIONAL RED - EGGSHELL	SHERWIN WILLIAMS: SW 6321 "RED BAY"	BENJAMIN MOORE: CPS-1195 "FLAMENCO"	PPG: PPG 333-7 "BLAZE"
P-3	CEILING WHITE - FLAT	SHERWIN WILLIAMS: SW 7006 "EXTRA WHITE"	BENJAMIN MOORE: PM-1 "SUPER WHITE"	PPG: PPG 1001-1 "DELICATE WHITE"
P-4	WENDY'S DARK TAUPE - EGGSHELL	SHERWIN WILLIAMS: SW 7039 "VIRTUAL TAUPE"	BENJAMIN MOORE: 999 "RUSTIC TAUPE"	PPG: PPG 1024-6 "PATCHES"
P-5	PAINT- GRAY - EGGSHELL	SHERWIN WILLIAMS: SW 7065 "ARGOS"	BENJAMIN MOORE: 2134-50 "GULL WING GRAY"	PPG: PPG 1009-4 "GRAY STONE"
P-6	PAINT- WHITE - EGGSHELL	SHERWIN WILLIAMS: SW 8917 "SHELL WHITE"	BENJAMIN MOORE: OC-17 "WHITE DOVE"	PPG: PPG 18-09 "GARLIC CLOVE"
P-7	PAINT- DARK GRAY - EGGSHELL	SHERWIN WILLIAMS: SW 7076 "CITY SCAPE"	BENJAMIN MOORE: 2134-40 "WHALE GRAY"	PPG: PPG 1009-5 "PHOENIX FOSSIL"
P-8	WOOD STAIN	SHERWIN WILLIAMS: SW WOOD CLASSICS WATERBORNE POLYURETHANE VARNISH	BENJAMIN MOORE: N-4223 WATERBORNE URETHANE ACRYLIC CLEAR	PPG: DFT259 SATIN- DEFT INTERIOR POLYURETHANE WATER BASED
P-9	PAINT- DARK GREY - FLAT	SHERWIN WILLIAMS: SW 7674 "PEPPERCORN"	BENJAMIN MOORE: 2121-10 "GRAY"	PPG: PPG 1001-6 "KNIGHTS ARMOUR"
P-10	PAINT- BLUE - EGGSHELL	SHERWIN WILLIAMS: SW 9138 "STARDEW"	BENJAMIN MOORE: AF-545 "SOLITUDE"	PPG: PPG 1037-3 "SPECIAL DELIVERY"
P-11	PAINT- BRONZE - EGGSHELL	SHERWIN WILLIAMS: BRONZETONE CUSTOM COLORS: "MISSISSIPPI BRONZE"	BENJAMIN MOORE: P23-60 "BRONZETONE"	PPG: 1002-7 "PHANTOM MIST"

INTERIOR PRIMER

BASE	SHEEN	SHERWIN WILLIAMS	BENJAMIN MOORE	PPG
GYPSUM BOARD	EGGSHELL	SHERWIN WILLIAMS - PRIME: PROMAR 200 ZERO VOC PRIMER FINISH: PROMAR 200 ZERO EGGSHELL	BENJAMIN MOORE- PRIME: 046 SUPERIOR PRIMER OR SELF PRIME WITH S24 FINISH: 522 AURA WATERBORNE INTERIOR EGGSHELL FINISH	PPG- PRIME: PPG SPEEDHIDE 6-2 INTERIOR QD ACRYLIC PRIMER FINISH: PPG-25-250 ACCENT COLOR BASE
METAL DECK	FLAT	SHERWIN WILLIAMS - PRIME: SELF PRIMING, RUST INHIBITIVE PRO INDUSTRIAL DTM ACRYLIC	BENJAMIN MOORE- PRIME: SELF PRIMING, RUST INHIBITIVE, HP 25 DTM LOW LUSTRE	PPG- PRIME: SELF PRIMING, RUST INHIBITIVE, PPG PITT-TECH 90-472 DTM SATIN FINISH
WOOD DECK	FLAT	SHERWIN WILLIAMS - PRIME: 1 COAT SW PREMIUM WALL & WOOD PRIMER FINISH: 2 COATS SW PROMAR 200 ZERO VOC FLAT	BENJAMIN MOORE - PRIME: 023 FRESH START ALL PURPOSE	PPG- PRIME: PPG SEAL GRIP PRIMER AS BASE COAT, TINT PRIMER TO "KNIGHTS ARMOUR" FINISH: PPG SPEEDHIDE ZERO VOC FLAT
RESTROOM GYPSUM BOARD	SEMI-GLOSS	SHERWIN WILLIAMS- PRIME: PROMAR 200 VOC PRIMER FINISH: PROMAR 200 VOC FLAT	BENJAMIN MOORE- PRIME: 046 SUPERIOR PRIMER OR SELF PRIME WITH S24 FINISH: 528 AURA WATERBORNE INTERIOR MATTE FINISH	PPG- PRIME: PPG SPEEDHIDE 6-2 INTERIOR QD ACRYLIC PRIMER FINISH: PPG SPEEDHIDE 6-70 INTERIOR ACRYLIC FLAT
KITCHEN GYPSUM BOARD	SEMI-GLOSS	SHERWIN WILLIAMS- PRIME: PROMAR 200 VOC PRIMER FINISH: PROMAR 200 VOC SEMI-GLOSS	BENJAMIN MOORE- PRIME: 046 SUPERIOR PRIMER OR SELF PRIME WITH S24 FINISH: 528 AURA WATERBORNE INTTERIOR SEMI GLOSS FINISH	PPG- PRIME: PPG SEAL GRIP 17-921 ACRYLIC UNIVERSAL PRIMER

TILE INSTALLATION SCHEDULE

LOCATION	TILE	MORTAR	GROUT	JOINT	MEMBRANE	REMARKS
INTERIOR FLOORS						
DINING ROOMS	FT-2	MR-2	GR-6	1/8"	WM-1	
RESTROOMS	FT-2	MR-2	GR-5	1/8"	WM-1	EXTEND MEMBRANE 24" OUT AND 12" UP PERIMETER WALLS
INTERIOR WALLS						
DINING ROOMS	WT-1	MR-1	GR-1	1/8"	WM-1	
	WT-2	MR-2	GR-3	1/8"	WM-1	
	B-2	MR-2	GR-6	1/8"		
FRESTYLE, CONDIMENT	WT-3	MR-1	GR-7	1/8"	WM-1	
FIREPLACE	WT-4	MR-1	GR-7	1/8"	WM-1	
RESTROOMS	WT-2	MR-2	GR-2	1/8"	WM-1	
	B-2	MR-2	GR-5	1/8"	WM-1	EXTEND MEMBRANE 24" OUT AND 12" UP PERIMETER WALLS
KITCHEN AREAS	WT-1	MR-1	GR-1	1/8"	WM-1	
	B-4	MR-1	GR-5	1/8"	WM-1	EXTEND MEMBRANE 24" OUT AND 12" UP PERIMETER WALLS

GENERAL NOTES:
1. REFER TO INTERIOR/EXTERIOR FINISH SCHEDULE FOR ADDITIONAL INFORMATION, INCLUDING COLOR.
2. REFER TO SPEC DIVISION 09 "TILING" FOR ADDITIONAL INFORMATION.

JOINT TREATMENT SCHEDULE

(SEE SPECIFICATIONS - DIVISION 7 FOR CLARIFICATION OF TYPES)

EXT: "E" INT: "I"	CONDITION	TYPE
E	PERIMETER JOINTS OF DOOR FRAMES, WINDOW FRAMES, STOREFRONT, AND/OR WINDOW WALL FRAME ASSEMBLIES, LOUVERS, FIXTURES, AND OTHER PENETRATIONS IN THE BUILDING ENCLOSURES NOT OTHERWISE SEALED WATERTIGHT, U.N.O. PROVIDE CONTINUOUS SEALANT UNDER EXTERIOR DOOR THRESHOLDS AND WINDOW SYSTEMS THAT REST DIRECTLY ON FLOOR SLAB.	JS-1
E	MASONRY/CONCRETE CONTROL JOINTS IN WALLS	JS-1
E	E.I.F.S JOINTS IN WALLS	JS-1
E	EXPANSION JOINTS IN AND AROUND CONCRETE PAVEMENT, UNIT PAVEMENT, CURBS, OR OTHER HORIZONTAL SURFACES.	JS-3
E	PERIMETER JOINTS AND OTHER OPEN JOINTS AT EXTERIOR SOFFITS.	JS-1
E	INTERSECTION OF DISSIMILAR MATERIALS THAT ALLOW AIR OR WATER INFILTRATION.	JS-1
E	INTERSECTION OF DISSIMILAR MATERIALS IN WHICH INSTALLATION IS NOT UNIFORM OR WHERE WORKMANSHIP DOES NOT MEET ACCEPTABLE CONSTRUCTION TOLERANCES, BUT SUCH WORKMANSHIP IS ACCEPTED BY THE ARCHITECT.	JS-1
I	PERIMETER JOINTS ON INTERIOR SIDE OF DOOR FRAMES, WINDOW FRAMES, AND OTHER FRAMED MATERIALS IN WALLS WITH NO FINISHED EDGE FLANGE.	JS-2
I	OPEN JOINTS AT PENETRATIONS THROUGH WALLS, CONCRETE, PLASTER, OR GYP, BD. CEILINGS WHERE INTENDED TO BE TIGHT SEALED JOINTS.	JS-2
I	OPEN JOINT BETWEEN DISSIMILAR MATERIALS WHERE INTENDED TO BE TIGHT SEALED JOINTS.	JS-2
I	JOINTS WHERE EDGE TRIM OF GYP. BD. ABUTTS IRREGULAR SURFACES OR OTHER SURFACES AND LEAVES OPEN JOINTS.	JS-2
I	EXPOSED JOINTS AT JUNCTURES OF COUNTERTOPS, CABINETS, OR OTHER "BUILT-IN" WORK WITH IRREGULAR SURFACES INTENDED TO BE TIGHT SEALED JOINT.	JS-2
I	EXPOSED JOINTS AT JUNCTURES OF WALL MOUNTED PLUMBING FIXTURES AND/OR TOILET ACCESSORIES WITH IRREGULAR SURFACES AND INTENDED TO BE TIGHT SEALED JOINT.	JS-5
I	CONTROL JOINTS, SAWN JOINTS AND OPEN JOINTS IN AND AROUND CONCRETE SLABS AND CURBS.	JS-4

JOINT TREATMENT NOTES

1. THE JOINT TREATMENT SCHEDULE IS INTENDED TO ILLUSTRATE ALL JOINT CONDITIONS WHICH ARE MEANT TO BE SEALED WHETHER REFERENCED FROM OTHER DETAILS OR NOT.
2. AT METAL FRAME LOCATIONS (DOORS, WINDOWS, ETC.) HOLD FRAME BACK FROM SUBSTRATE 3/8" @ HEAD & SILL AND 3/16" @ JAMB TO ALLOW FOR SEALANT, TYPICAL. U.N.O. THIS INCLUDES DIMENSIONS FOR STEEL LINTELS WHERE APPLICABLE.
3. PROVIDE PROPER SEALERS AS REQUIRED TO FULLY CLOSE JOINTS THAT ARE INTENDED TO BE TIGHT AND AS SHOWN ON THE DRAWINGS.
4. PROVIDE CLOSED CELL BACKER ROD AS REQUIRED TO ACHIEVE PROPER SEALANT THICKNESS PER MANUFACTURER'S INSTALLATION INSTRUCTIONS.

GENERAL FLASHING REQUIREMENTS

1. PROPERLY WEEP FLASHING POINTS & NORMAL DRAINAGE POINTS WITH WEEPS @ 1'-4" O.C. MAX. SPACING. WEEP POINTS ARE TO BE LOCATED DIRECTLY ON TOP OF FLASHING.
2. AT OPENINGS, EXTEND HEAD FLASHING 8" MIN. BEYOND EACH SIDE OF OPENING. TURN FLASHING UP A MIN. OF ONE MASONRY COURSE IN HEAD JOINTS OR A MIN. OF 4" WHERE HEAD JOINTS DO NOT OCCUR, IN ORDER TO FORM A "WATER DAM."
3. WHERE FLASHING IS LOCATED ON THE TOP OF STEEL ANGLES, EXTEND FLASHING 1/4" BEYOND THE TANGENT POINT OF THE ANGLE LEG TO ALLOW FOR DRIP & SEALANT APPLICATION. REFER TO DIAGRAM "A."
4. WHERE FLASHING IS LOCATED IN MASONRY, EXTEND FLASHING A MIN. OF 1/4" BEYOND THE FACE OF THE MASONRY TO ALLOW FOR DRIP & SEALANT APPLICATION. REFER TO DIAGRAM "B."
5. WHERE FLASHING IS LOCATED TO TERMINATE AND/OR SEPARATE MATERIALS, DO NOT SEAL (U.N.O.) - REFER TO DIAGRAM "C." WHERE IT IS DETERMINED BY THE MATERIAL MANUFACTURER OR OTHERWISE THAT SEALING IS REQUIRED (TO PREVENT WATER PENETRATION BEYOND FLASHING DUE TO WIND DRIVEN RAIN), THEN SEALANT MUST BE WEEPED IN ACCORDANCE WITH NOTE #1 ABOVE.
6. UNLESS NOTED OTHERWISE, TURN FLASHING UP A MIN. OF 4" BEHIND APPROPRIATE MATERIALS.
7. FLASHING CONDITIONS, WHETHER DETAILED OR NOT, ARE TO BE IN ACCORDANCE WITH S.M.A.C.N.A. SPECIFICATIONS. WHERE ATYPICAL CONDITIONS OCCUR THAT ARE NOT DETAILED, FLASHING IS TO BE INSTALLED AS CLOSELY AS POSSIBLE TO THE S.M.A.C.N.A. DETAIL THAT MOST CLOSELY APPROXIMATES THE ACTUAL CONDITION.
8. UNLESS NOTED OTHERWISE, AT FLASHING HIGH POINTS, TURN FLASHING HORIZONTALLY INTO ADJACENT MASONRY COURSING OR SEAL WATER TIGHT TO BACK-UP SUBSTRATE IF MASONRY DOES NOT EXIST.

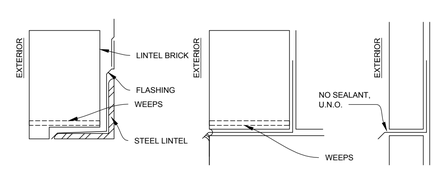

DIAGRAM 'A' STONE, MASONRY, OR CONCRETE

DIAGRAM 'B' STONE, MASONRY, OR CONCRETE

DIAGRAM 'C' VINYL, WOOD, OR METAL

BLDG. INSULATION SCHEDULE DIV. 7

DESCRIPTION (ZONE 5)	THICKNESS (TOTAL R-VALUE)	LOCATION
RIGID PERIMETER FOUNDATION INSULATION (EXTRUDED POLYSTYRENE)	R-10	PERIMETER FOUNDATION TO FROST DEPTH
BATT OR RIGID INSULATION	5 1/2" (R-20)	EXTERIOR WALL CAVITY
FIBERGLASS BATT INSULATION (FOIL FACE FSK-25)	5 1/2" (R-20)	EXTERIOR WALL CAVITY @ EXPOSED AREAS ABOVE CEILING
RIGID ROOF INSULATION (POLYISOCYANAURATE)	6" PROVIDED (R=30c)	ABOVE ROOF DECK, TAPERED TO DRAIN
SOUND ATTENUATION BATT INSULATION	3 1/2" U.N.O.	INTERIOR WALL CAVITIES - SEE PARTITION TYPES

BLDG. INSULATION GENERAL NOTES

1. INSULATION LOCATIONS SHOWN IN SCHEDULE ARE INTENDED ONLY FOR CLARIFICATION PURPOSES AND ARE NOT INTENDED TO BE ALL-ENCOMPASSING. PROVIDE EACH INSULATION TYPE AS REQUIRED TO FULLY MAINTAIN THE THERMAL INTEGRITY OF THE CONSTRUCTION ASSEMBLIES RELATED TO THE ENTIRE BUILDING ENVELOPE,

SITE NUMBER:	12281
BASE MDL:	SMART 55 - SQUARE 2017
ASSET TYPE:	FRANCHISEE
CLASSIFICATION:	NEW
OWNER:	WENSPOK
BASE VERSION:	2017
UPGRADE CLASSIFICATION:	NEW BUILD
PROJECT YEAR:	2020
FURNITURE PACKAGE:	2016 V3
DRAWING RELEASE	JANUARY 2020

Russell C. Page ARCHITECTS
204 N. Division Street, Suite 'E'
Spokane, WA 99202
(509) 467-9748 Fx: (509) 467-9817

PROJECT TYPE: NEW SMART 55 SQE

Wendy's

HIGHWAY 95
PONDERAY, ID 83852

REV.	DATE	DESCRIPTION
△		
△		

ISSUE DATE: 5-28-2020

PROJECT NUMBER: 20-113

DRAWN BY: MEXXX

CHECKED BY: XXX

SEAL

LICENSED ARCHITECT AR 984311
8/10/2020
RUSSELL C. PAGE
STATE OF IDAHO

SHEET NAME

PAINT AND TILE SCHEDULE

SHEET NUMBER

A6.2

8/10/2020, 11:05 AM, N:\Home\20-113 WENDY'S PONDERAY\30_SMART_55-SQUARE_A6_1_Finish Schedule.dwg, user

DOOR SCHEDULE

1		DOOR							FRAME		
DOOR MARK	ROOM	SIZE WD	SIZE HGT	SIZE THK	HDW GROUP	GLAZ. TYPE	TYPE	MATL	TYPE	MATL	REMARKS
01	ENTRY #1	3'-0"	7'-0"	1 3/4"	1	G-1 (T)	A	ALUM	2A	ALUM	
02	ENTRY #2	3'-0"	7'-0"	1 3/4"	1	G-1 (T)	A	ALUM	II	ALUM	
03	VESTIBULE #1	3'-0"	7'-0"	1 3/4"	2	G-3 (T)	A	ALUM	Ø	ALUM	
04	REAR SERVICE DOOR	3'-6"	6'-8"	1 3/4"	3	G-3	D	HM	01	HM	
05	MEN'S	3'-0"	6'-8"	1 3/4"	7	-	B	PL	00	ALUM	1, 2
06	WOMEN'S	3'-0"	6'-8"	1 3/4"	7	-	B	PL	00	ALUM	1, 2
07	SERVING AREA	3'-6"	6'-8"	1 3/4"	8	- (T)	E	SS	00	HM	3
09	OFFICE	3'-0"	6'-8"	1 3/4"	4	-	C	PL	00	ALUM	1

DOOR GENERAL NOTES:

1. USE 3-1/2" SCREWS ON ALL DOOR HINGES.

DOOR SCHEDULE REMARKS:

1. MARLITE AAA SERIES 500 DOOR AND FRAME.
2. "MEN" OR "WOMEN" TOILET ROOM SIGN.
3. "EMPLOYEES ONLY" SIGN.
4. "EMERGENCY EXIT ONLY ALARM WILL SOUND" SIGN.
5. PROVIDE KICK PLATE BOTH SIDES.
6. "EXIT ONLY" APPLIED TO INTERIOR FACE AND LEGIBLE TO EXTERIOR.

** = DOOR IN STORE FRONT SYSTEM, REF: WINDOW ELEVATIONS

(T) = TEMPERED GLASS

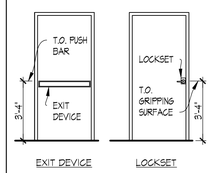

DOOR HARDWARE MOUNTING HEIGHTS

WINDOW SCHEDULE

1	SIZES PROVIDED IN THE WINDOW SCHEDULE INDICATE ROUGH OPENING DIMENSIONS U.N.O. *INDICATES SIZE IS ACTUAL FRAME DIMENSION					
WINDOW MARK	SIZE WD	SIZE HGT	GLAZING THK	GLAZING TYPE	FRAME MATL	REMARKS
1A	9'-4"	6'-2 1/2"	1"	G-1/G-5	ALUM.	
1B	9'-4"	4'-6 1/2"	1"	G-1	ALUM.	
2A	9'-6 3/4"	9'-2 1/2"	1"	G-1	ALUM.	
2B	9'-6 3/4"	4'-6 1/2"	1"	G-1	ALUM.	
3A	5'-3 1/4"	6'-2 1/2"	1"	G-1	ALUM.	
3B	5'-3 1/4"	4'-6 1/2"	1"	G-1	ALUM.	
4A	6'-10 1/2"	6'-2 1/2"	1"	G-1	ALUM.	
4B	6'-10 1/2"	4'-6 1/2"	1"	G-1	ALUM.	
5A	11'-4"	6'-2 1/2"	1"	G-1/G-5	ALUM.	5
5B	11'-4"	4'-6 1/2"	1"	G-1	ALUM.	
6	6'-0 1/4"	3'-5 1/4"	1"	G-1	ALUM.	
6L	4'-0 1/4"	3'-5 1/4"	1"	G-1	ALUM.	1, 2
6R	4'-0 1/4"	3'-5 1/4"	1"	G-1	ALUM.	1, 3
7	9'-2 1/4"*	5'-6"	1"	G-1	ALUM.	
8	3'-4"*	5'-6"	1"	G-1	ALUM.	
8.1	4'-6 1/2"*	5'-6"	1"	G-1	ALUM.	
9	4'-4 7/8"*	5'-6"	1"	G-1	ALUM.	
10	9'-9 1/2"	9'-2 1/2"	1"	G-3	ALUM.	
11	0'-8"	7'-2 "	1"	G-1	ALUM.	

WINDOW SCHEDULE GENERAL NOTES:

1. ALL EXTERIOR WINDOW FRAMES TO BE THERMALLY BROKEN.
2. WINDOW CONTRACTOR SHALL FIELD VERIFY ROUGH OPENING DIMENSIONS FOR ALL SCHEDULED WINDOWS PRIOR TO PREPARATION OF SHOP DRAWINGS.
3. REFER TO FINISH SCHEDULE ON SHEET A6.1 FOR GLAZING AND FRAME TYPE DESIGNATION DESCRIPTIONS.

WINDOW SCHEDULE REMARKS:

1. QUIKSERV SS-4035E. USE SS4035E-IP WHERE IMPACT RATED IS REQUIRED.
2. PROVIDE LEFT HANDED OPERATION AS INDICATED BY "L"
3. PROVIDE RIGHT HANDED OPERATION AS INDICATED BY "R"
4. PICK UP WINDOW 6'-0" OPTION: QUICKSERV BI-PARTING BP7252E OR BP-7241E-IP (IMPACT RESISTANT)
5. REFER TO EXTERIOR ELEVATIONS FOR LOCATION OF PANES TO RECEIVE FROSTED GLAZING (G-5)

(T) = TEMPERED GLASS

DOOR ELEVATIONS

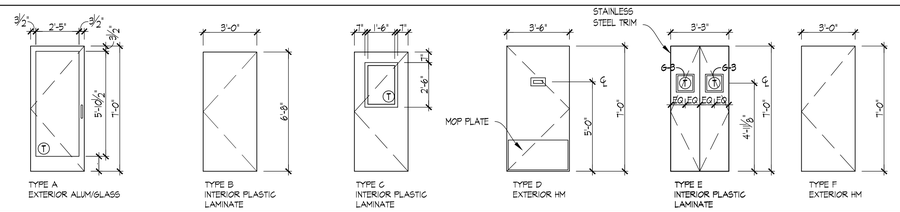

FRAME ELEVS.

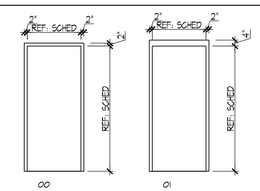

DOOR HARDWARE SCHEDULE

QTY.		DESCRIPTION	MODEL	FINISH	MFG
SET 01 - EXTERIOR STOREFRONT ENTRANCE					
1 1/2	PR.	HINGES	BB1191 4 1/2" x 4 1/2" NRP	US26/626	HAGER
1	EA.	EXIT DEVICE	1792NL-HBOP	US26	FALCON
1	EA.	PULL	BF110	US26/626	ROCKWOOD
1	EA.	PULL (HOT CLIMATE)	908.02.8	LIGHT GRAY	HAFELE
1	EA.	CLOSER	SC70-18	689	FALCON
1	EA.	FLOOR STOP	438	US26D/626	ROCKWOOD
1	EA.	THRESHOLD	350	ALUMINUM MILL	NGP
1	EA.	DOOR SWEEP	200NA	ANODIZED ALUMINUM	NGP
SET 02 - INTERIOR STOREFRONT ENTRANCE					
1 1/2	PR.	HINGES	BB1279 4 1/2" x 4 1/2"	US26/626	HAGER
1	EA.	PUSH/PULL	11047	US26/626	ROCKWOOD
1	EA.	CLOSER	SC70-18	689	FALCON
1	EA.	FLOOR STOP	438	US26D/626	ROCKWOOD
SET 03 - STANDARD REAR SERVICE DOOR (BY WIB SUPPLIER)					
3	EA.	HINGES - HEAVY DUTY LEAF HINGE		626	
1	EA.	INTERIOR PANIC BAR			
1	EA.	CLOSER	6503	AL	CALIBRE
		KEYED ONLY EXTERIOR ENTRY W/ PULL HANDLE			
1	EA.	KICKPLATE			
1	EA.	GASKET	5050CL	---	ROCKWOOD
1	EA.	SWEEP	200NA	AL	NGP
1	EA.	SECURITY ASTRAGAL	1392SP 83" USP	DRK BZ	NGP
1	EA.	DOOR LITE (6" X 2")	L_VGLF-WD GPZ	DRK BZ	NGP
1	EA.	FLOOR STOP	438	630	ROCKWOOD
1	EA.	THRESHOLD	350	AL	NGP
1	EA.	DRIP CAP	16	---	NGP

QTY.		DESCRIPTION	MODEL	FINISH	MFG
SET 03 - ENHANCED REAR SERVICE DOOR (BY WIB SUPPLIER)					
1	EA.	CONTINUOUS HINGE	SL24HD	626	SELECT
1	EA.	INTERIOR PANIC BAR	25EO	626	FALCON
1	EA.	CLOSER	SC-70-18	AL	FALCON
		INTERCHANGEABLE CORE			
1	EA.	KICKPLATE	K1050 8" X 2" LESS DOOR WIDTH	US32D/630	ROCKWOOD
		GASKET	5050CL	---	ROCKWOOD
1	EA.	SWEEP	200NA	DK BNZ	NGP
1	EA.	SECURITY ASTRAGAL	1392SP 83" USP	DRK BZ	NGP
1	EA.	DOOR LITE (6" X 2")	L_VGLF-WD GPZ	DRK BZ	NGP
1	EA.	FLOOR STOP	438	630	ROCKWOOD
1	EA.	THRESHOLD	350	AL	NGP
1	EA.	DRIP CAP	16	---	NGP
SET 04 - OFFICE DOOR					
1 1/2	PR.	HINGES	BB1279 4 1/2" x 4 1/2"	US26D/626	HAGER
1	EA.	OFFICE LOCKSET	B511GD	626	FALCON
1	EA.	KICKPLATE	K1050 20 X 2" LESS DOOR WIDTH	US32D/630	ROCKWOOD
1	EA.	WALL STOP	406	US10B/613	ROCKWOOD

SET 05 - CLOSET DOOR

NOT USED

SET 06 - RESTROOM DOOR (MULTIPLE USER)

NOT USED

QTY.		DESCRIPTION	MODEL	FINISH	MFG
SET 07 - RESTROOM DOOR (SINGLE USER)					
1 1/2	PR.	HINGES	BB1279 4 1/2" x 4 1/2"	US26D/626	HAGER
1	EA.	PRIVACY LOCKSET	B301D	626	FALCON
1	EA.	CLOSER	SC70-18	AL	FALCON
1	EA.	KICKPLATE	K1050 20 X 2" LESS DOOR WIDTH	US32D/630	ROCKWOOD
1	EA.	WALL STOP	406	US26D/626	ROCKWOOD
SET 08 - KITCHEN DOOR					
1	EA.	TRACK/ROLLERS	SKU: SF-AE07S	US26D/626	REAL
1	EA.	PRIVACY LOCKSET (OPTIONAL)	SKU: DH-RC-TRDP-S	US26D/626	REAL
2	EA.	DOOR PULLS	SKU: P-RC-SKYRISE06-S	US26D/626	REAL
1	EA.	DOOR GUIDE	SKU: CGUIDE-134-T	US26D/626	REAL
1	EA.	DOOR VIEWER	L-FRA100 12"X12"	ASL	NATIONAL GUARD PRODUCTS

PROVIDE STAINLESS STEEL EDGING CONT. AROUND DOOR SLAB.
EDGING MATERIAL TO BE SUPPLIED BY SERTEK OR ALTERNATE VENDOR.

SET 09 - EGRESS DOOR

NOT USED

GENERAL NOTES:

1. G.C. TO PROVIDE AND INSTALL KICKPLATES ON INTERIOR DOORS.

WINDOW ELEVATIONS

(DRAWN FROM EXTERIOR SIDE U.N.O.)

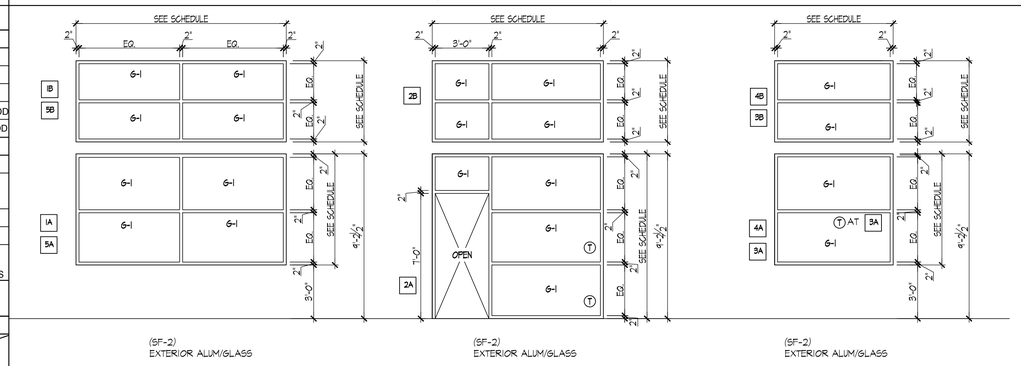

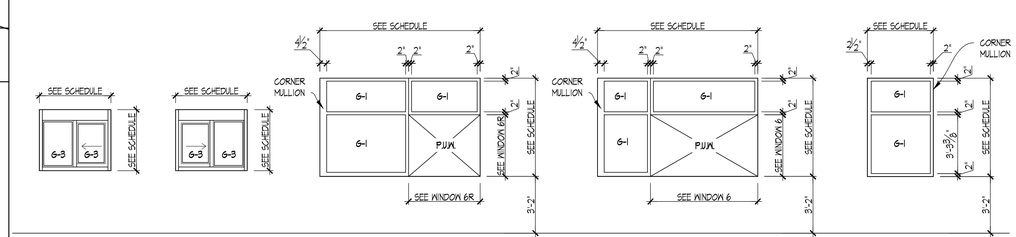

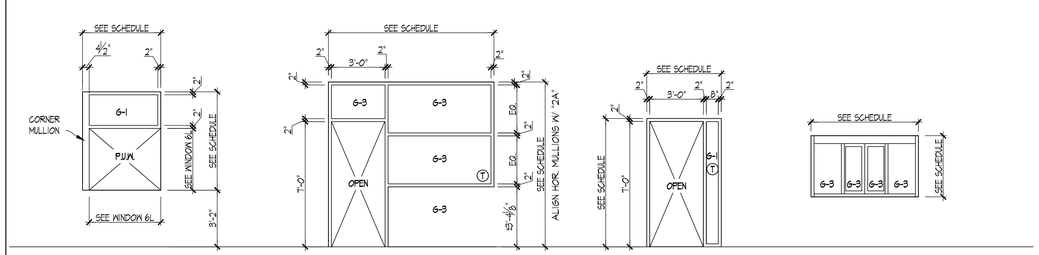

SITE NUMBER:	12281
BASE MDL:	SMART 55 - SQUARE 2017
ASSET TYPE:	FRANCHISEE
CLASSIFICATION:	NEW
OWNER:	WENSPOK
BASE VERSION:	2017
UPGRADE CLASSIFICATION:	NEW BUILD
PROJECT YEAR:	2020
FURNITURE PACKAGE:	2016 V3
DRAWING RELEASE	JANUARY 2020

Russell C. Page ARCHITECTS
204 N. Division Street, Suite 'E'
Spokane, WA 99202
(509) 467-9748 Fx: (509) 467-9817

PROJECT TYPE: NEW SMART 55 SQE

Wendy's.

HIGHWAY 95
PONDERAY, ID 83852

REV.	DATE	DESCRIPTION
△		
△		

ISSUE DATE: 5-28-2020

PROJECT NUMBER: 20-113

DRAWN BY: MEXXX

CHECKED BY: XXX

SEAL

LICENSED ARCHITECT AR 984311
5/14/20
RUSSELL C. PAGE
STATE OF IDAHO

SHEET NAME

DOOR & WINDOW SCHEDULE

SHEET NUMBER

A6.3

8/10/2020, 11:06 AM, N:\Home\20-113 WENDYS PONDERAY\30_SMART_55-SQUARE_AE_3_Door & Window Schedule.dwg, user

ACCESSORY SCHEDULE

MARK	QTY	DESCRIPTION	MODEL	FINISH	NOTES
L	-	NOT USED	--		
M	-	NOT USED	--		
N	-	NOT USED	--		
P	1	FIRE EXTINGUISHER CABINET; SEMI-RECESSED	POTTER ROEMER: 7032		GC PROVIDED AND INSTALLED
Q	2	FIRE EXTINGUISHER 5LB - 3A-40:BC DRY CHEMICAL EXTINGUISHER	SENTRY 5 . MODEL AA05S-1 (#442257)		GC PROVIDED
R	-	NOT USED	--		
S	-	NOT USED	--		
T	1	FIRE EXTINGUISHER 6 LITER TYPE-K WET CHEMICAL	ANSUL K GUARD MODEL K01-3 (#434909) W/ BRACKET		GC PROVIDED
U	1	FLY LIGHT	GILBER 20000GT (WHITE)		

NOTE: GC RESPONSIBLE FOR INITIAL TAGGING AND INSPECTION OF FIRE EXTINGUISHERS. REFER TO SUPPLIER SHEET FOR BUILDING MATERIAL CONSOLIDATOR INFORMATION.

ARTPACK & WAYFINDING LEGEND

AP-1	ENTRY BRAND MOMENT
AP-2	QUALITY IS OUR RECIPE
AP-3	DAVE THOMAS QUOTE
AP-4	MEDALLION WENDY'S SEAL
AP-10	DTFA - WE LOVE ADOPTION
WC-5CA	WENDY'S MURAL - PAINTED WALL COVER
WGHP	WENDY'S MURAL - PAINTED PLEXIGLASS
WF-3	WI-FI SIGN
WF-4	NO SMOKING SIGN
WF-5	MEN'S ROOM DOOR SIGN
WF-6	WOMEN'S ROOM DOOR SIGN
WF-7	MEN'S ROOM SIGN ACCESSIBLE
WF-8	WOMEN'S ROOM SIGN ACCESSIBLE
WF-9	CREW MUST WASH HANDS
WF-10	RESTROOM CLEANLINESS
WF-11	TACTILE EXIT SIGN (WHERE REQUIRED)
WF-12	EMPLOYEES ONLY
WF-14	UNISEX / GENDER NEUTRAL SIGN (OPTIONAL - USE WHERE REQUIRED BY CODE)
NP	NUTRITION POSTER

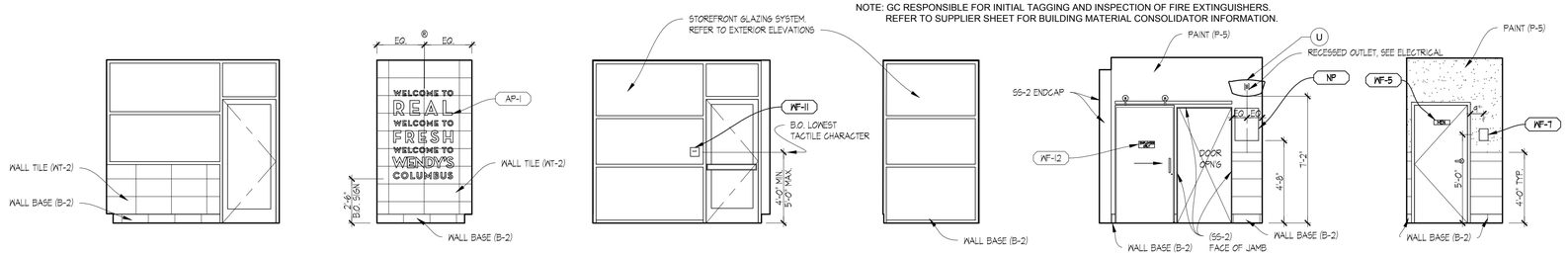

12 VESTIBULE
SCALE: 1/4"=1' - 0"

11 VESTIBULE
SCALE: 1/4"=1' - 0"

10 VESTIBULE
SCALE: 1/4"=1' - 0"

09 VESTIBULE
SCALE: 1/4"=1' - 0"

08 HALLWAY
SCALE: 1/4"=1' - 0"

07 HALLWAY
SCALE: 1/4"=1' - 0"

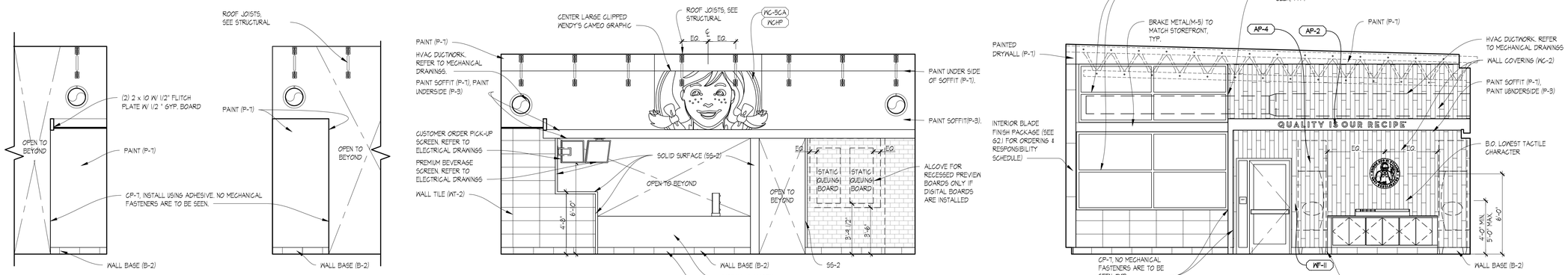

06 CONDIMENTS AREA
SCALE: 1/4"=1' - 0"

05 DINING AREA
SCALE: 1/4"=1' - 0"

04 SERVING AREA
SCALE: 1/4"=1' - 0"

03 DINING AREA
SCALE: 1/4"=1' - 0"

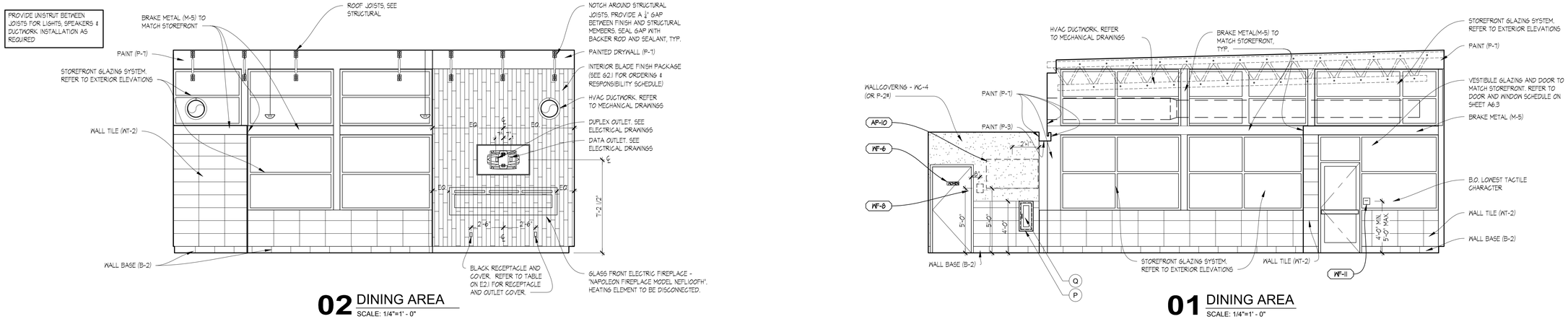

02 DINING AREA
SCALE: 1/4"=1' - 0"

01 DINING AREA
SCALE: 1/4"=1' - 0"

SITE NUMBER:	12281
BASE MDL:	SMART 55 - SQUARE 2017
ASSET TYPE:	FRANCHISEE
CLASSIFICATION:	NEW
OWNER:	WENSPOK
BASE VERSION:	2017
UPGRADE CLASSIFICATION:	NEW BUILD
PROJECT YEAR:	2020
FURNITURE PACKAGE:	2016 V3
DRAWING RELEASE	JANUARY 2020

Russell C. Page ARCHITECTS
204 N. Division Street, Suite 'E'
Spokane, WA 99202
(509) 467-9748 Fx: (509) 467-9817

PROJECT TYPE: NEW SMART 55 SQE

Wendy's®

HIGHWAY 95
PONDERAY, ID 83852

REV.	DATE	DESCRIPTION
△		
△		

ISSUE DATE: 5-28-2020

PROJECT NUMBER: 20-113

DRAWN BY: MEK

CHECKED BY:

SEAL

LICENSED ARCHITECT AR 984311
RUSSELL C. PAGE
STATE OF IDAHO

SHEET NAME
INTERIOR ELEVATIONS DINING ROOM

SHEET NUMBER
A7.1

8/10/2020, 11:07 AM, N:\Home\20-113 WENDY'S PONDERAY\30_SMART_55-SQUARE_A7_1_Interior Elevations.dwg, user

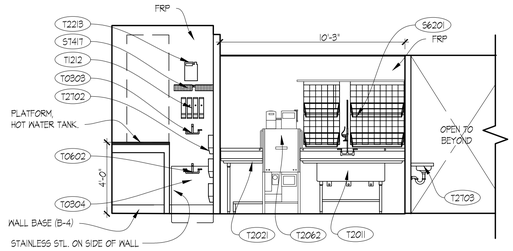

ALTERNATE- WAREWASH (T2602)
SCALE: 1/4"=1' - 0"

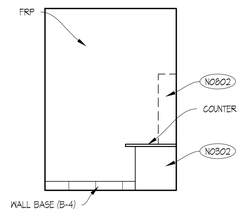

13 OFFICE
SCALE: 1/4"=1'-0"

ACCESSORY SCHEDULE

MARK	QTY	DESCRIPTION	MODEL	FINISH	NOTES
L	-	NOT USED	--		
M	-	NOT USED	--		
N	-	NOT USED	--		
P	1	FIRE EXTINGUISHER CABINET; SEMI-RECESSED	POTTER ROEMER: 7032		GC PROVIDED AND INSTALLED
Q	2	FIRE EXTINGUISHER 5LB - 3A-40:BC DRY CHEMICAL EXTINGUISHER	SENTRY 5 . MODEL AA05S-1 (#442257)		GC PROVIDED
R	-	NOT USED	--		
S	-	NOT USED	--		
T	1	FIRE EXTINGUISHER 6 LITER TYPE-K WET CHEMICAL	ANSUL K GUARD MODEL K01-3 (#434909) W/ BRACKET		GC PROVIDED
U	1	FLY LIGHT	GILBER 20000GT (WHITE)		

NOTE: GC RESPONSIBLE FOR INITIAL TAGGING AND INSPECTION OF FIRE EXTINGUISHERS. REFER TO SUPPLIER SHEET FOR BUILDING MATERIAL CONSOLIDATOR INFORMATION.

ARTPACK & WAYFINDING LEGEND

AP-1	ENTRY BRAND MOMENT
AP-2	QUALITY IS OUR RECIPE
AP-3	DAVE THOMAS QUOTE
AP-4	MEDALLION WENDY'S SEAL
AP-10	DTFA - WE LOVE ADOPTION
WG-5CA	WENDY'S MURAL - PAINTED WALL COVER
WGHP	WENDY'S MURAL - PAINTED PLEXIGLASS
WF-3	WI-FI SIGN
WF-4	NO SMOKING SIGN
WF-5	MEN'S ROOM DOOR SIGN
WF-6	WOMEN'S ROOM DOOR SIGN
WF-7	MEN'S ROOM SIGN ACCESSIBLE
WF-8	WOMEN'S ROOM SIGN ACCESSIBLE
WF-9	CREW MUST WASH HANDS
WF-10	RESTROOM CLEANLINESS
WF-11	TACTILE EXIT SIGN (WHERE REQUIRED)
WF-12	EMPLOYEES ONLY
WF-14	UNISEX / GENDER NEUTRAL SIGN (OPTIONAL - USE WHERE REQUIRED BY CODE)
NP	NUTRITION POSTER

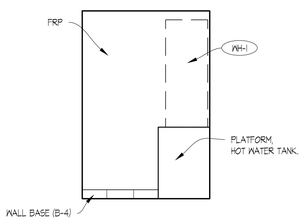

12 PREPARATION AREA
SCALE: 1/4"=1'-0"

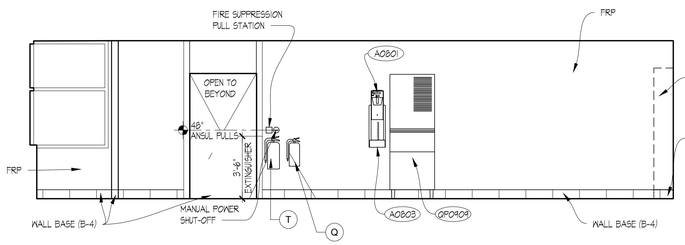

11 PREPARATION AREA / UTILITY
SCALE: 1/4"=1' - 0"

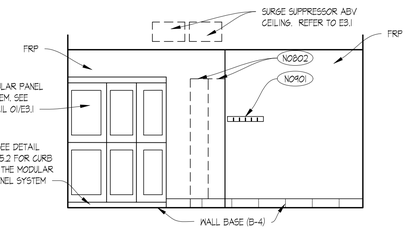

10 UTILITY
SCALE: 1/4"=1' - 0"

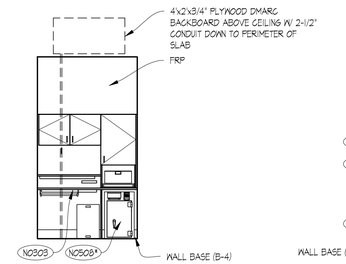

09 OFFICE
SCALE: 1/4"=1' - 0"

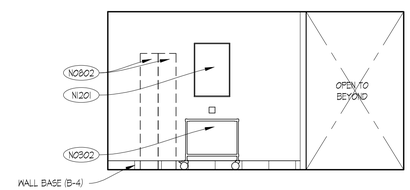

08 EMPLOYEE AREA
SCALE: 1/4"=1' - 0"

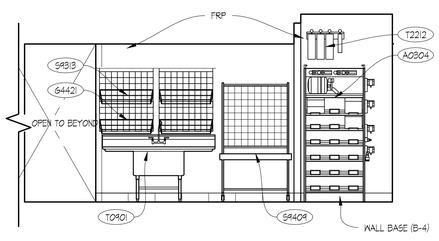

07 PREPARATION AREA
SCALE: 1/4"=1' - 0"

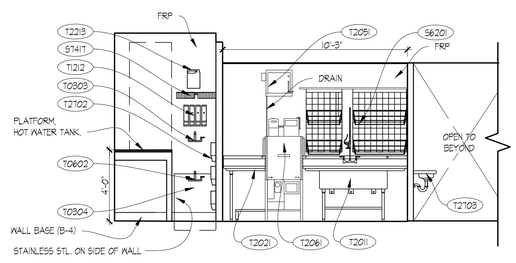

06 PREPARATION AREA WAREWASH
SCALE: 1/4"=1' - 0"

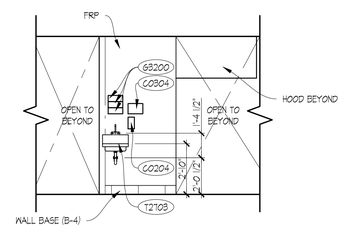

05 PREPARATION AREA
SCALE: 1/4"=1' - 0"

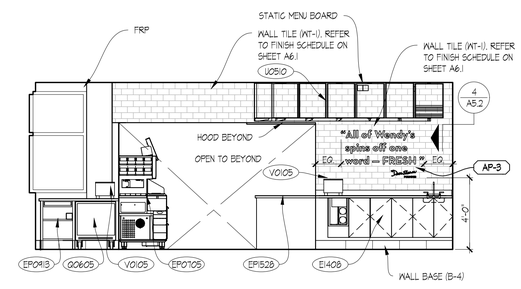

04 SERVING AREA
SCALE: 1/4"=1' - 0"

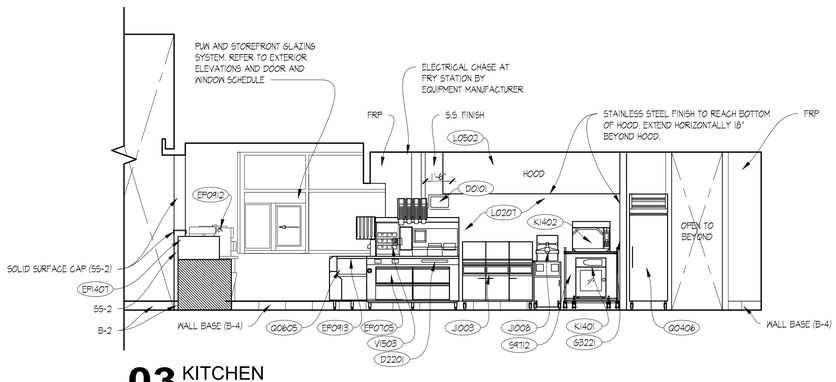

03 KITCHEN
SCALE: 1/4"=1' - 0"

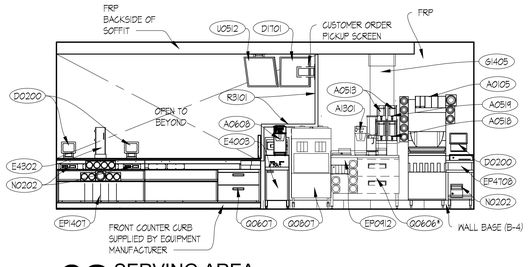

02 SERVING AREA
SCALE: 1/4"=1' - 0"

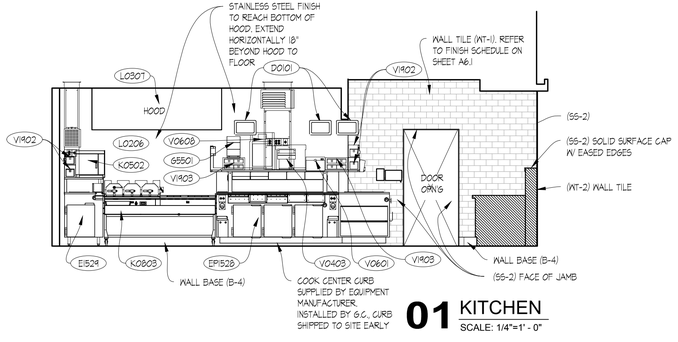

01 KITCHEN
SCALE: 1/4"=1' - 0"

SITE NUMBER:	12281
BASE MDL:	SMART 55 - SQUARE 2017
ASSET TYPE:	FRANCHISEE
CLASSIFICATION:	NEW
OWNER:	WENSPOK
BASE VERSION:	2017
UPGRADE CLASSIFICATION:	NEW BUILD
PROJECT YEAR:	2020
FURNITURE PACKAGE:	2016 V3
DRAWING RELEASE	JANUARY 2020

Russell C. Page ARCHITECTS
204 N. Division Street, Suite 'E'
Spokane, WA 99202
(509) 467-9748 Fax: (509) 467-9817

PROJECT TYPE: NEW SMART 55 SQE

Wendy's®
HIGHWAY 95
PONDERAY, ID 83852

REV.	DATE	DESCRIPTION
△		
△		

ISSUE DATE: 5-28-2020

PROJECT NUMBER: 20-113

DRAWN BY: MEK

CHECKED BY:

SEAL

LICENSED ARCHITECT AR 984311
RUSSELL C. PAGE
STATE OF IDAHO

SHEET NAME
INTERIOR ELEVATIONS KITCHEN

SHEET NUMBER
A7.2

8/10/2020, 11:07 AM, N:\Home\20-113 WENDYS PONDERAY\3D_SMART_55-SQUARE_A7_1_Interior Elevations.dwg, user

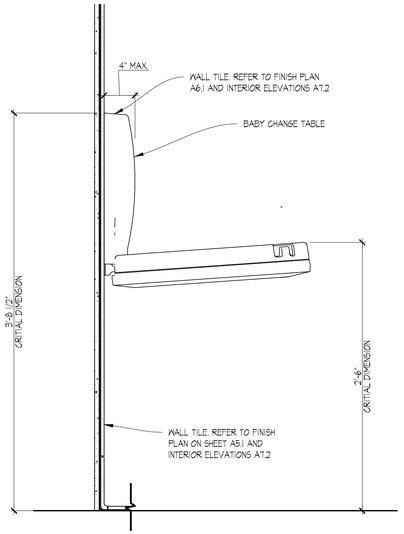

10 BABY CHANGING TABLE DETAIL
SCALE: 1 1/2"=1' - 0"

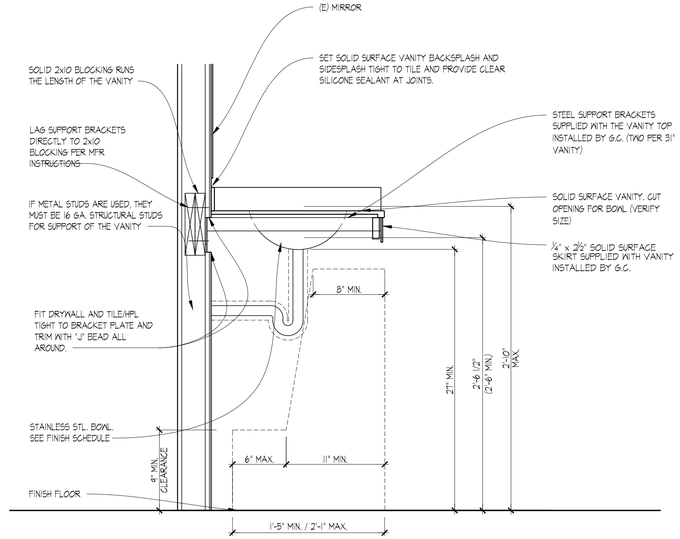

09 VANITY SECTIONAL DETAIL
SCALE: 1 1/2"=1' - 0"

RESTROOM FIXTURE AND HARDWARE SCHEDULE

MARK	QTY	DESCRIPTION	MODEL	FINISH	NOTES
A		SEMI-RECESSED PAPER TOWEL & WASTE RECEPTACLE	ASI 46424-A (SEMI-RECESSED) PAPER ROLL AUTOMATIC DISPENSING OR BOBRICK B-3974 (SEMI-RECESSED) PAPER ROLL AUTOMATIC DISPENSING	STAINLESS STEEL	
B		(OPTIONAL) - SURFACE MOUNTED HI-SPEED HAND DRYER	WORLD DRYER VERDEdri #Q-973A	BRUSHED STAINLESS STEEL	OPTIONAL
C		TOILET PAPER DISPENSER. SURFACE MOUNTED JUMBO ROLL TOILET TISSUE DISPENSER	ASI MODEL NO. 0042	SATIN	OUTER CABINET, STAINLESS STEEL
D		COAT HOOK	BRADLEY 9114	SATIN	SEE PLAN FOR LOCATIONS
E		BABY CHANGING STATION	KOALA KARE PRODUCTS KB200-00	CREAM	REFER TO MANUFACTURER FOR INSTALLATION
F		TWO WALL TOILET COMPARTMENT GRAB BAR 1 1/4" DIAMETER	ASI - 3800 TYPE 57	SATIN	STAINLESS STEEL W/ EXPOSED MOUNTING, FURNISHED COMPLETE W/ MOUNTING KIT
G		NOT USED			
H		MIRROR	MEEK 2513	SATIN	STAINLESS STEEL - ANGLE FRAMED W/ WELDED CORNERS
J		18" VERTICAL GRAB BAR	ASI MODEL 3800 TYPE 1	SATIN	STAINLESS STEEL W/ EXPOSED MOUNTING, FURNISHED COMPLETE W/ MOUNTING KIT
K		SOAP DISPENSER - TOUCHLESS (C0204) CUSTOMER RESTROOM			SUPPLIED BY KED
L		NOT USED			
M		NOT USED			

NOTE: REFER TO SUPPLIER SHEET FOR BUILDING MATERIAL CONSOLIDATOR CONTACT INFORMATION

ARTPACK & WAYFINDING LEGEND

AP-1	ENTRY BRAND MOMENT
AP-2	QUALITY IS OUR RECIPE
AP-3	DAVE THOMAS QUOTE
AP-4	MEDALLION WENDY'S SEAL
AP-10	DTFA - WE LOVE ADOPTION
WG-5CA	WENDY'S MURAL - PAINTED WALL COVER
WGHP	WENDY'S MURAL - PAINTED PLEXIGLASS
WF-3	WI-FI SIGN
WF-4	NO SMOKING SIGN
WF-5	MEN'S ROOM DOOR SIGN
WF-6	WOMEN'S ROOM DOOR SIGN
WF-7	MEN'S ROOM SIGN ACCESSIBLE
WF-8	WOMEN'S ROOM SIGN ACCESSIBLE
WF-9	CREW MUST WASH HANDS
WF-10	RESTROOM CLEANLINESS
WF-11	TACTILE EXIT SIGN (WHERE REQUIRED)
WF-12	EMPLOYEES ONLY
WF-14	UNISEX / GENDER NEUTRAL SIGN (OPTIONAL - USE WHERE REQUIRED BY CODE)
NP	NUTRITION POSTER

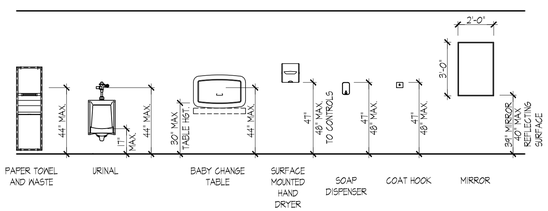

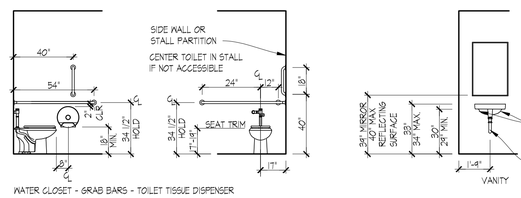

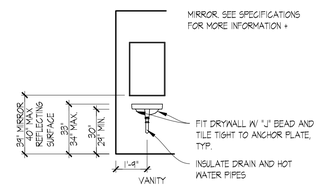

NOTE: CONTRACTOR TO PROVIDE 2x6 WOOD BLOCKING IN WALL FOR ANCHORAGE OF GRAB BARS AND OTHER WALL MOUNTED ITEMS AS REQUIRED.

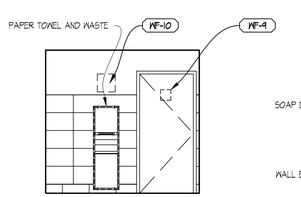

08 WOMEN'S RESTROOM
SCALE: 1/4" = 1'-0"

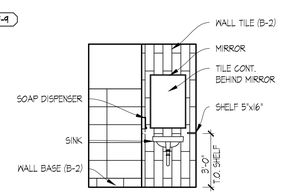

07 WOMEN'S RESTROOM
SCALE: 1/4" = 1'-0"

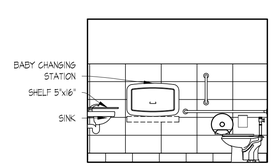

06 WOMEN'S RESTROOM
SCALE: 1/4" = 1'-0"

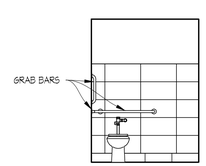

05 WOMEN'S RESTROOM
SCALE: 1/4" = 1'-0"

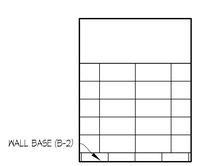

04 MEN'S RESTROOM
SCALE: 1/4" = 1'-0"

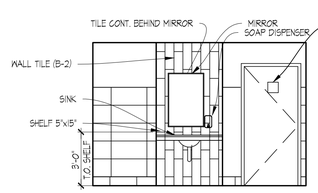

03 MEN'S RESTROOM
SCALE: 1/4" = 1'-0"

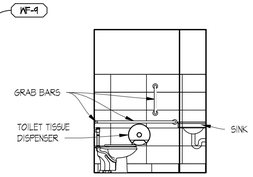

02 MEN'S RESTROOM
SCALE: 1/4" = 1'-0"

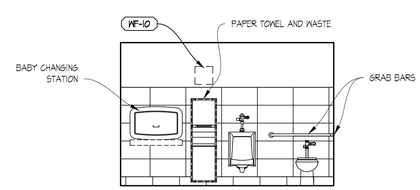

01 MEN'S RESTROOM
SCALE: 1/4" = 1'-0"

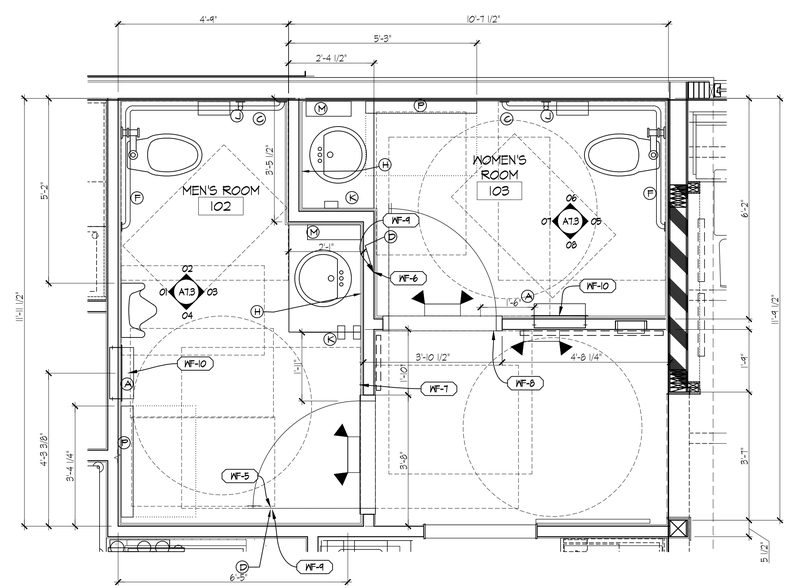

A ENLARGED RESTROOM PLAN
SCALE: 1/2"=1'-0"

SITE NUMBER:	12281
BASE MDL:	SMART 55 - SQUARE 2017
ASSET TYPE:	FRANCHISEE
CLASSIFICATION:	NEW
OWNER:	WENSPOK
BASE VERSION:	2017
UPGRADE CLASSIFICATION:	NEW BUILD
PROJECT YEAR:	2020
FURNITURE PACKAGE:	2016 V3
DRAWING RELEASE	JANUARY 2020

Russell C. Page ARCHITECTS
204 N. Division Street, Suite 'E'
Spokane, WA 99202
(509) 467-9748 Fx: (509) 467-9817

PROJECT TYPE: NEW SMART 55 SQE

Wendy's.

HIGHWAY 95
PONDERAY, ID 83852

REV.	DATE	DESCRIPTION

ISSUE DATE: 5-28-2020

PROJECT NUMBER: 20-113

DRAWN BY: MDXXX

CHECKED BY: XXX

SEAL

LICENSED ARCHITECT AR 984311
8/10/20
RUSSELL C. PAGE
STATE OF IDAHO

SHEET NAME
INTERIOR ELEVATIONS RESTROOM

SHEET NUMBER
A7.3

8/10/2020, 11:08 AM, N:\Home\20-113 WENDYS PONDERAY\30_SMART_55-SQUARE_A7_1_Interior Elevations.dwg, user

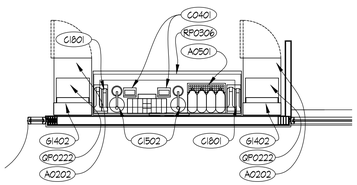

CONDIMENT OPTION: 2 FREESTYLE

SCALE: 1/4"=1'-0"

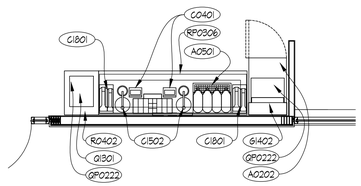

CONDIMENT OPTION: 1 FREESTYLE, 1 ICE/WATER DISPENSER

SCALE: 1/4"=1'-0"

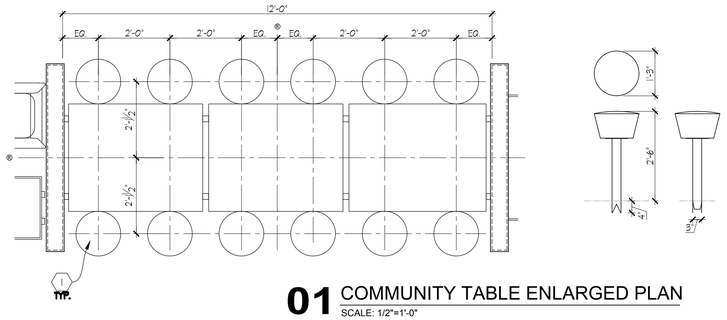

01 COMMUNITY TABLE ENLARGED PLAN

SCALE: 1/2"=1'-0"

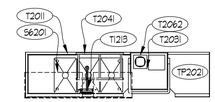

ALTERNATE WAREWASH (T2602)

SCALE: 1/4"=1'-0"

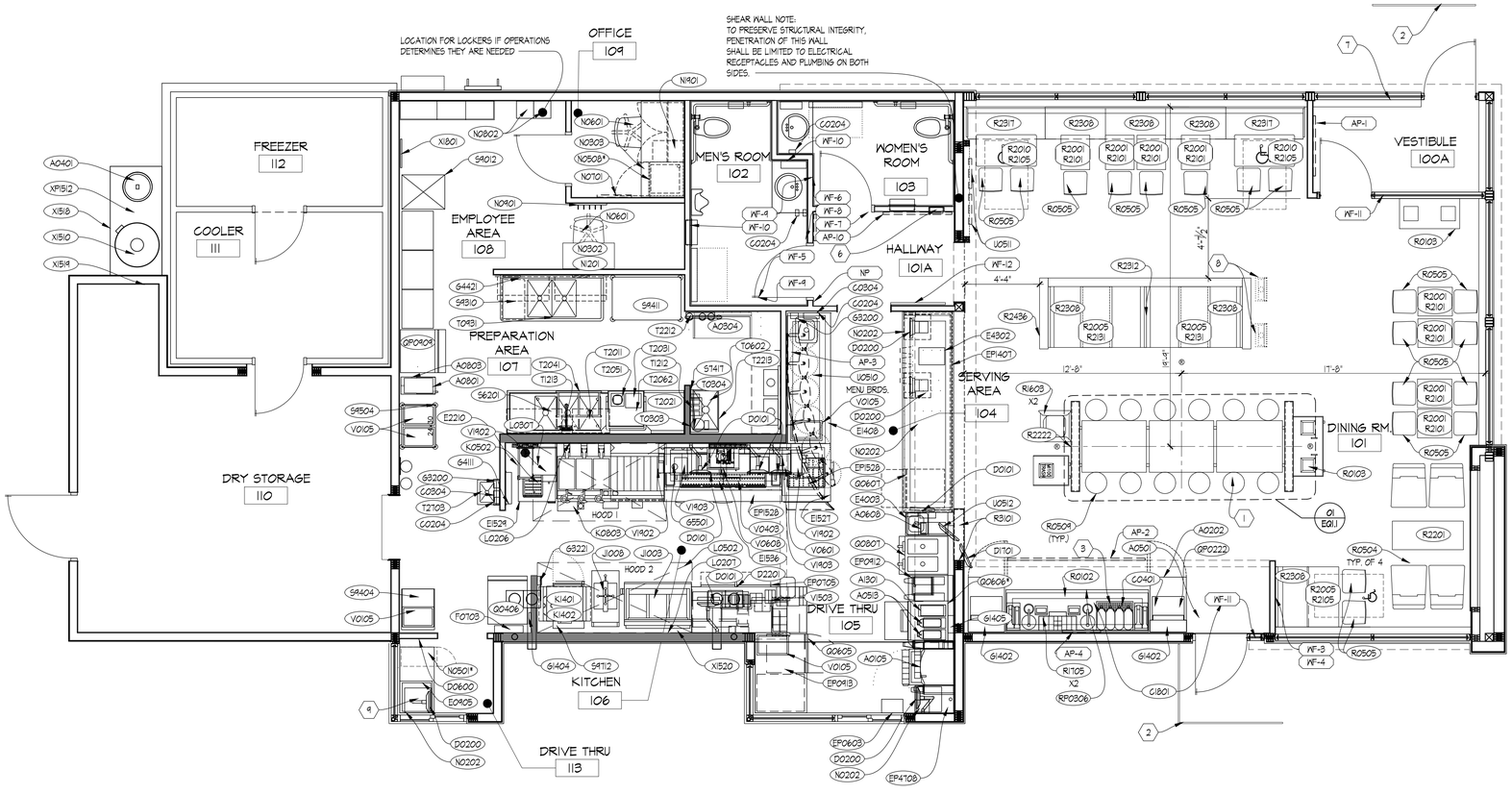

EQUIPMENT PLAN

SCALE

ARTPACK & WAYFINDING LEGEND

AP-1	ENTRY BRAND MOMENT
AP-2	QUALITY IS OUR RECIPE
AP-3	DAVE THOMAS QUOTE
AP-4	MEDALLION WENDY'S SEAL
AP-10	DTFA - WE LOVE ADOPTION
WC-5CA	WENDY'S MURAL - PAINTED WALL COVER
WCHP	WENDY'S MURAL - PAINTED PLEXIGLASS
WF-3	WI-FI SIGN
WF-4	NO SMOKING SIGN
WF-5	MEN'S ROOM DOOR SIGN
WF-6	WOMEN'S ROOM DOOR SIGN
WF-7	MEN'S ROOM SIGN ACCESSIBLE
WF-8	WOMEN'S ROOM SIGN ACCESSIBLE
WF-9	CREW MUST WASH HANDS
WF-10	RESTROOM CLEANLINESS
WF-11	TACTILE EXIT SIGN (WHERE REQUIRED)
WF-12	EMPLOYEES ONLY
WF-14	UNISEX / GENDER NEUTRAL SIGN (OPTIONAL - USE WHERE REQUIRED BY CODE)
NP	NUTRITION POSTER

GENERAL NOTES

A. G.C. SHALL COORDINATE ALL REQUIREMENTS OF MILLWORK, SPECIALTIES, EQUIPMENT, AND FURNISHINGS WITH OWNER PRIOR TO START OF WORK.

B. ELECTRICAL & PLUMBING REQUIREMENTS FOR THE INSTALLATION OF MILLWORK, SPECIALTIES, EQUIPMENT, AND FURNISHINGS IS THE RESPONSIBILITY OF THE G.C.

C. THE EQUIPMENT LISTED IS TO BE FURNISHED BY THE KITCHEN EQUIPMENT DISTRIBUTOR UNLESS NOTED OTHERWISE.

D. KITCHEN EQUIPMENT DISTRIBUTOR PROVIDES LABOR FOR UNCRATING, ASSEMBLY AND SETTING OF EQUIPMENT.

E. KITCHEN EQUIPMENT DISTRIBUTOR WILL SUPPLY CRITICAL DIMENSIONS, PLUMBING AND ELECTRICAL SPECIFICATIONS FOR EQUIPMENT SUPPLIED BY THE KITCHEN EQUIPMENT DISTRIBUTOR.

F. ELECTRICAL AND PLUMBING CONTRACTOR TO MAKE FINAL CONNECTION TO EQUIPMENT

G. SEE INTERIOR ELEVATIONS FOR ARTPACK GRAPHIC LOCATIONS.

H. SIGNAGE TO BE SUBMITTED UNDER SEPARATE PERMIT.

I. THE CONTRACTOR SHALL PROVIDE AND INSTALL SOLID WOOD BLOCKING FOR ALL WALL MOUNTED ITEMS, SIGNAGE, EQUIPMENT, MILLWORK, ETC. COORDINATE LOCATIONS WITH OWNER'S CONSTRUCTION REPRESENTATIVE AS NECESSARY.

CODED NOTES:

1. STOOLS CORE DRILLED/INSTALLED BY GC. CENTER OF STOOLS AS SHOWN.
2. NEW METAL GUARD RAILING. REFER TO SITE PLAN ASI.I.
3. UNDERSLAB DRAIN FOR CONDIMENT STAND. REFER TO MECHANICAL DRAWINGS.
4. NOT USED
5. NOT USED
6. LOCATION OF RECESSED FIRE EXTINGUISHER (TYPE ABC). REFER TO INTERIOR ELEVATIONS ON SHEET AT.I
7. WINDOW SHADES ONLY APPLIED ABOVE VESTIBULE AT THIS LOCATION
8. OPTIONAL KIOSK. REFER TO ELECTRICAL DRAWINGS.
9. S.S. WINDOW TRIM

SITE NUMBER:	12281
BASE MDL:	SMART 55 - SQUARE 2017
ASSET TYPE:	FRANCHISEE
CLASSIFICATION:	NEW
OWNER:	WENSPOK
BASE VERSION:	2017
UPGRADE CLASSIFICATION:	NEW BUILD
PROJECT YEAR:	2020
FURNITURE PACKAGE:	2016 V3
DRAWING RELEASE	JANUARY 2020

Russell C. Page ARCHITECTS
204 N. Division Street, Suite 'E'
Spokane, WA 99202
(509) 467-9748 Fx: (509) 467-9817

PROJECT TYPE: NEW
SMART 55 SQE

Wendy's
HIGHWAY 95
PONDERAY, ID 83852

REV.	DATE	DESCRIPTION

ISSUE DATE: 5-28-2020

PROJECT NUMBER: 20-113

DRAWN BY: MEXXX

CHECKED BY: XXX

SEAL

LICENSED ARCHITECT AR 984311
5/14/20
RUSSELL C. PAGE
STATE OF IDAHO

SHEET NAME

EQUIPMENT PLAN
FRZN BUN MARKET-ALT

SHEET NUMBER

EQ1.1

8/17/2020, 4:55 PM, N:\Home\20-113 WENDY'S PONDERAY\40_SMART_55-SQUARE_EQ1_1_Equipment Plan.dwg, user

EQUIPMENT SCHEDULE

WORK CELL NUMBER	MARK	QUANTITY	DESCRIPTION OF EQUIPMENT	REMARKS	FURNISHED BY	INSTALLED BY
WC0202			WORK CELL: FRONT COUNTER - STRAIGHT			
	C0204	1	SOAP DISPENSER - TOUCH FREE		KED	KED
	C0304	1	TOWEL DISPENSER - SHORT		KED	KED
	EP1407	1	FRONT COUNTER - STRAIGHT		KED	KED
	Q0607	INC	REFRIGERATOR - 2 DRAWER	PART OF EP1407	KED	KED
	E1408	1	BACKCOUNTER		KED	KED
	E4302	1	BAKERY CASE		KED	KED
	G3200	1	GLOVE BOX HOLDER		KED	KED
WC0403			WORK CELL: BEVERAGE LINE - FREESTYLE (SELECT ONE)	AOR TO DETERMINE OWNER'S PREFERENCE (WC0402 or WC0403)		
	A0105	1	BEVERAGE SYSTEM, PUW - FREESTYLE		KED	KED
	A0608	1	COFFEE BREWER		KED	KED
	A1301	1	BEVERAGE DISPENSER (BUBBLER)		KED	KED
	EP0912	1	PACKAGE, STANDARD BEVERAGE LINE		KED	KED
	E4003	INC	CABINET -- DRIVE THROUGH (w/HAND SINK)	PART OF EP0912	KED	GC
					KED	KED
	A0513	2	BEVERAGE URN STAND		KED	KED
	G1405	1	EQUIPMENT CHASE		KED	KED
	EP4708	1	PACKAGE, PUW TO FREESTYLE		~~KED~~	~~KED~~
	~~Q0606*~~	~~1~~	~~REFRIGERATOR, UNDER COUNTER - 2 DRAWERS~~	OPTIONAL EQUIPMENT	KED	KED
	Q0807	1	FROSTY, DUAL HEAD	9' CORDSET WIT NEMA 15-30P PLUG BY EC	KED	GC
WC0701			WORK CELL: SINGLE LINE COOK CENTER NGK			
	A0801		TEA BREWER		KED	KED
	A0803	1	TEA BREWER BRACKET		KED	KED
	EP1528	1	SANDWICH STATION, SINGLE LINE		KED	KED
	E1529	INC	MEAT REFRIGERATOR	PART OF EP1528	KED	KED
	G4111	INC	NIGHT HOLDER COVER	PART OF EP1528	KED	KED
	G5501	INC	HOLDER BUN BOX	PART OF EP1528	KED	KED
	E1528	INC	COOK COUNTER - SANDWICH STATION	PART OF EP1528	KED	KED
	E1527	INC	SALAD STATION	PART OF EP1528	KED	KED
	E1536	1	COOK CENTER CURB		KED	GC
	K0502	1	MICROWAVE, MEDIUM DUTY		KED	KED
	K0803	1	DOUBLE SIDED GRILL (72" WIDE)	MODEL C806	KED	KED
	L0206	1	STAINLESS STEEL WALL PANEL KIT @ GRILL LINE 4X10 SHEETS		KED	KED
	L0307	1	EXHAUST HOOD - GRILL (HOOD #1) 93"L x 63"D		O	GC
	V0105	1	FULL SIZE WARMER		KED	KED
	V0403	1	BUN TOASTER (HORIZONTAL CONTACT TOASTER)		KED	KED
	V0608	1	WARMING CABINET - BUN WARMER		KED	KED
	V0601	1	WARMER - TORTILLA		KED	KED
	V1902	3	HOLDING CABINET - SINGLE SIDED - 1 LARGE DRAWER PAN		KED	KED
	V1903	2	HOLDING CABINET - SINGLE SIDED - 4 SHALLOW PAN		KED	KED
WC1105			WORK CELL: FRY LINE W/2 PICK-UP WINDOWS			
	D2201	1	FRY LINE TIMER		KED	KED
	EP0705	1	FRY DUMP ASSEMBLY		KED	KED
	EP0913	1	PACKAGE, FRY WALL TO WINDOW		KED	KED
	E0603	INC	SHELF FOR DRINK CARRIER	PART OF EP0913	KED	KED
	E0905	INC	COUNTER, DRIVE-THRU	PART OF EP0913	KED	KED
	G1404	INC	WALL CHASE	PART OF EP0913	KED	KED
	G3221	1	GLOVE BOX HOLDER		KED	KED
	J1003	1	3 VAT OPEN FRYER	OWNER OR KED SUPPLIED - AOR TO VERIFY		KED
	J1008	1	PRESSURE FRYER	OWNER OR KED SUPPLIED - AOR TO VERIFY		KED
	K1401	1	COMBI OVEN		KED	KED
	K1402	1	HIGH SPEED OVEN		KED	KED
	L0207	1	STAINLESS STEEL WALL PANEL KIT @ FRY LINE- 4X10 SHEETS		KED	KED
	L0502	1	EXHAUST HOOD - FRYER (HOOD #2) - 108" L X 46"		O	GC
	Q0406	1	REACH-IN-FREEZER FULL SIZE		KED	KED
	Q0605	1	UNDER COUNTER REFRIGERATOR		KED	KED
	S9712	1	STAND - COMBI AND HIGH SPEED OVENS		KED	KED
	V1503	1	HOLDING CABINET		KED	KED
	XP1512	1	USED COOKING OIL TANK PACKAGE (W/ CO2)	UCO VENDOR	O	GC
	X1510	INC	USED COOKING OIL TANK	PART OF XP1512	O	GC
	X1518	INC	USED COOKING OIL ENCLOSURE	PART OF XP1512	O	GC
	X1519	INC	USED COOKING OIL CONTROL PANEL	PART OF XP1512	O	GC
	X1520	INC	USED COOKING OIL MANIFOLD	PART OF XP1512	O	GC
WC1406			WORK CELL: BACON AND CHILI			
	S9404	1	WORK TABLE MODULE (24" x 30")		KED	KED
	S9504	1	CHILI MODULE / CART		KED	KED
	V0105	3	FULL SIZE WARMER		KED	KED

O = OWNER GC = GENERAL CONTRACTOR KED = KITCHEN EQUIPMENT DISTRIBUTOR

EQUIPMENT SCHEDULE

WORK CELL NUMBER	MARK	QUANTITY	DESCRIPTION OF EQUIPMENT	REMARKS	FURNISHED BY	INSTALLED BY
WC1602			WORK CELL: HAND SINK			
	T2703	1	HAND SINK		KED	GC
	C0204	1	SOAP DISPENSER		KED	KED
	C0304	1	TOWEL DISPENSER		KED	KED
	G3200	3	GLOVE BOX HOLDER		KED	KED
WC1503- NOT USED						
					KED	GC
					KED	GC
					KED	KED
					KED	KED
					KED	KED
					KED	KED
					KED	KED
					O	O
					KED	GC
					O	O
					KED	KED
					KED	KED
WC1508			WORK CELL: PREP AREA - WAREWASH - SELF CONTAINED BOOSTER HEATER			
	G4421	1	KNIFE HOLDER		KED	KED
	S6201	1	WAREWASH SHELVING RACK		KED	KED
	S7413	1	WALL MOUNT & GRID COMPONENTS		KED	KED
	S9310	1	PREP SINK SHELVING RACK		KED	KED
	S9411	1	MOBILE PREP TABLE - VEGETABLE PREP		KED	KED
	T1213	1	CHEM. BLED STATION - 3 COMP SINK		O	O
	T0931	1	PREP SINK, 2 COMP		KED	GC
	T2011	1	THREE (3) COMP SINK		KED	GC
	TP2021	1	DISH TABLE PACKAGE		KED	KED
	T2031	INC	DISH TABLE RACK SHELF	PART OF TP2021	KED	KED
	T2041	1	SLIDE, DISH RACK - WAREWASH		KED	KED
	T2062	1	WAREWASH MACHINE		KED	KED
WC1801			WORK CELL: WALK IN BOX STORAGE	USED WITH Y0131, Y0132, Y0133, & Y0134 WIB DESIGNS		
	S9204	2	FREEZER STORAGE UNIT (18" x 48"x80")		KED	KED
	S9212	1	FREEZER CARTON CART (18"x30"x12")		KED	KED
	S9213	3	FREEZER COOLER STORAGE (24"x42"x12")		KED	KED
	S9102	2	STORAGE UNIT - COOLER (24"x42"x80")		KED	KED
	S9103	1	STORAGE UNIT - COOLER (24"x48"x80")		KED	KED
	S9104	1	STORAGE UNIT - COOLER (24"x72"x80")		KED	KED
	S9105	1	THAW RACK (24"x30"x80")		KED	KED
	S9213	3	FREEZER / COOLER STORAGE DUNNAGE RACK - (22"x48"x12")		KED	KED
	S9006	6	STORAGE UNIT - PREP STORAGE AND CLEANING - (24"x48"x80")		KED	KED
	S9009	1	STORAGE - CARTON CART (18"x30"x35")		KED	KED
WC1802			WORK CELL: DRY STORAGE WITH HIGH DENSITY DRY STORAGE	USED WITH Y0131 & Y0133 WIB DESIGNS		
	S9204	2	FREEZER STORAGE UNIT (18" x 48"x80")		KED	KED
	S9212	1	FREEZER CARTON CART (18"x30"x12")		KED	KED
	S9213	3	FREEZER COOLER STORAGE (24"x42"x12")		KED	KED
	S9102	2	STORAGE UNIT - COOLER (24"x42"x80")		KED	KED
	S9103	1	STORAGE UNIT - COOLER (24"x48"x80")		KED	KED
	S9104	1	STORAGE UNIT - COOLER (24"x72"x80")		KED	KED
	S9105	1	THAW RACK (24"x30"x80")		KED	KED
	S9213	3	FREEZER / COOLER STORAGE DUNNAGE RACK		KED	KED
	S9006	4	STORAGE UNIT - PREP STORAGE AND CLEANING - (24"x48"x80")		KED	KED
	S9009	1	STORAGE - CARTON CART (18"x30"x35")		KED	KED
	S9010	2	STORAGE UNIT (21"x48"x80")		KED	KED
	S9012	1	CLEANING SUPPLY SHELF (24"x30"x80")		KED	KED
	S6101	1	CLEANING SUPPLY SHELF(54"x36")		KED	KED

O = OWNER GC = GENERAL CONTRACTOR KED = KITCHEN EQUIPMENT DISTRIBUTOR

EQUIPMENT SCHEDULE

WORK CELL NUMBER	MARK	QUANTITY	DESCRIPTION OF EQUIPMENT	REMARKS	FURNISHED BY	INSTALLED BY
WC2503			WORK CELL:OFFICE/EMPLOYEE & SAFETY			
	N0302	-	EMPLOYEE DESK		KED	KED
	N0303	1	MANAGER OFFICE DESK		KED	KED
	N0501*	1	SMART SAFE	OPTIONAL - ARMORED CAR PROVIDED	O	GC
	N0508*	1	OFFICE SAFE	OPTIONAL	KED	KED
	N0601	2	OFFICE CHAIR W/O ARM		KED	KED
	N0701	1	TRAINING CENTER WALL HOOKS		KED	KED
	N0901	1	COAT RACKS		KED	KED
	N1201	1	BULLETIN BOARD		KED	KED
	N1901	1	CASH SCALES	NOT SHOWN ON EQ1.1	KED	KED
	N2701	1	SAFETY EQUIPMENT RACK		KED	KED
	N0802	-	EMPLOYEE LOCKERS	AOR TO VERIFY QUANTITY (1 or 2)	KED	KED
	X1801	1	PERSONAL PROTECTIVE EQUIPMENT HOOKS		KED	KED
WC3011			WORK CELL:SEATING/DINNING ROOM FIXTURES			
	R0102	1	TRASH RECEPTACLE		KED	KED
	R0103	1	TRASH RECEPTACLE - 2 BIN ENCLOSURE		KED	KED
	R0504	4	LOUNGE CHAIR		KED	KED
	R0505	18	CHAIR - STANDARD HEIGHT		KED	KED
	R0506	4	CHAIR - BAR HEIGHT		KED	KED
	R0509	12	STOOL - BAR HEIGHT		KED	KED
	R2044	1	COMMUNITY TABLE		KED	KED
	R2308	6	SINGLE BOOTH		KED	KED
	R2317	2	SINGLE BOOTH		KED	KED
	R2306	-	DOUBLE BOOTH w/FINISHED BACK		KED	KED
	R2312	1	BOOTH - DOUBLE		KED	KED
	R2201	1	COFFEE TABLE		KED	KED
	R2001	8	TABLE TOP 20"x24"		KED	KED
	R2102	2	TABLE BASE 22"x22"x CAFE		KED	KED
	R2005	3	TABLE TOP 22"x42" (W/ 4 EASED CORNERS) - LAMINATE		KED	KED
	R2010	2	TABLE TOP 24"x42"		KED	KED
	R2015	-	TABLE TOP 20"x20" - LOUNGE TABLE		KED	KED
	R2022	2	TABLE TOP 26" ROUND - CLIPPED		KED	KED
	R2101	2	TABLE BASE (22"x22") - STANDARD HEIGHT		KED	KED
	R2103	-	TABLE BASE (22"x30") - STANDARD HEIGHT		KED	KED
	R2105	3	TABLE BASE (ACCESSIBLE) - STANDARD HEIGHT		KED	KED
	R2131	2	CANTILEVER TABLE BRACKET		KED	KED
	R2222	1	COMMUNITY TABLE ASSEMBLY - 10 SEATS		KED	KED
	R2436	1	CORNER BOOTH WALL		KED	KED
	R3101	1	FULL HEIGHT WALL CAP (FROSTY WALL) "CORIAN CANYON"		KED	GC
WC3206			WORK CELL: CONDIMENT STAND			
	A0202	2	BEVERAGE SYSTEM SELF-SERVE DINING ROOM - FREESTYLE		O	O
	QP0222	2	ICE MACHINE - DINING ROOM		KED	KED
	RP0302	1	CONDIMENT STAND PACKAGE (w/DRAIN)		KED	KED
	R0402		ICE & WATER CABINET	USE ONLY WHEN ICE/WATER DISPENSER SELECTED	KED	KED
	Q1301		ICE & WATER DISPENSER	OPTIONAL	KED	KED
	G1402		CHASE @ FREESTYLE		KED	KED

O = OWNER GC = GENERAL CONTRACTOR KED = KITCHEN EQUIPMENT DISTRIBUTOR

EQUIPMENT SCHEDULE

WORK CELL NUMBER	MARK	QUANTITY	DESCRIPTION OF EQUIPMENT	REMARKS	FURNISHED BY	INSTALLED BY
WC3305			WORK CELL: POS SYSTEM AND MENUBOARDS			
	D0100	4	POS MONITOR		O	O
	D0200	4	POS TERMINAL		O	O
	D0600	1	WIRELESS HEADSET SYSTEM		KED	KED
	N0202	4	CASH DROP BOX		KED	KED
	U0510	1	MENUBOARD - MAIN MENUBOARDs (STATIC)		O	GC
	U0511	2	PREVIEW BOARD (STATIC)		O	GC
	U0512	1	CEILING MOUNTED PREMIUM BEVERAGE SCREEN		O	GC
	D1701	1	CUSTOMER ORDER PICK UP SCREEN (COPS)		O	GC
WC1901			WORK CELL: MOP SINK/CLEANING EQUIPMENT			
	S7417	1	WALL HOOKS - FLOOR TOOLS		KED	KED
	T0303	1	FAUCET - MOP SINK		KED	KED
	T0304	1	FAUCET - MOP SINK (BLEND CENTER)		KED	KED
	T0602	1	MOP SINK WITH SPLASHES		KED	KED
	T1212	1	CHEMICAL BLEND STATION - MOP SINK		KED	KED
	S7413	1	WALL MOUNT & GRID COMPONENTS		KED	KED
WC1701			WORK CELL: DRINK EQUIPMENT			
	A0304	1	BAG IN BOX SODA RACK		KED	KED
	A0401	1	BULK Co2 TANK		KED	KED
	T2212	1	WATER FILTRATION SYSTEM		KED	KED
	T2213	1	REVERSE OSMOSIS SYSTEM		KED	KED
	Q01##	1	CONDENSING UNIT - ICE MAKER	PART OF QP0909	KED	KED
	Q0909	1	ICE MAKER	PART OF QP0909	KED	KED
	QP0909	1	ICE BIN		KED	KED
WC5004			WORK CELL: SMALLWARES (PARTIAL)			
	R1705	2	BOOSTER CHAIR		KED	KED
	R1603	2	HIGH CHAIRS		KED	KED
	~~E2211~~	~~1~~	~~CART, LETTUCE~~		~~KED~~	~~KED~~
WC2101			WORK CELL: SAFETY - U.S. (PARTIAL)			
	F0703	1	STEP LADDER - 6'		KED	KED
WC6005			FABRICATED MATERIAL. (PARTIAL)			
	C0204	1	SOAP DISPENSER - TOUCH FREE		KED	KED

O = OWNER GC = GENERAL CONTRACTOR KED = KITCHEN EQUIPMENT DISTRIBUTOR

SITE NUMBER: 12281
BASE MDL: SMART 55 - SQUARE 2017
ASSET TYPE: FRANCHISEE
CLASSIFICATION: NEW
OWNER: WENSPOK
BASE VERSION: 2017
UPGRADE CLASSIFICATION: NEW BUILD
PROJECT YEAR: 2020
FURNITURE PACKAGE: 2016 V3
DRAWING RELEASE JANUARY 2020

Russell C. Page
ARCHITECTS
204 N. Division Street, Suite 'E'
Spokane, WA 99202
(509) 467-9748 Fx: (509) 467-9817

PROJECT TYPE: NEW SMART 55 SQE

Wendy's®
HIGHWAY 95
PONDERAY, ID 83852

REV. DATE DESCRIPTION

ISSUE DATE: 5-28-2020
PROJECT NUMBER: 20-113
DRAWN BY: MEXXX
CHECKED BY: XXX

SEAL
LICENSED ARCHITECT AR 984311
8/10/20
RUSSELL C. PAGE
STATE OF IDAHO

SHEET NAME
EQUIPMENT SCHEDULE

SHEET NUMBER
EQ1.2

8/17/2020, 4:58 PM, N:\Home\20-113 WENDYS PONDERAY\40_SMART_55-SQUARE_EQ1_2_Equipment Schedule.dwg, user

STRUCTURAL NOTES

A. GENERAL

1. THE STRUCTURE IS DESIGNED TO BE SELF-SUPPORTING AND STABLE AFTER CONSTRUCTION IS FULLY COMPLETED. THE CONTRACTOR IS SOLELY RESPONSIBLE TO DETERMINE ERECTION PROCEDURE AND SEQUENCE TO ENSURE THE SAFETY OF THE BUILDING AND ITS COMPONENT PARTS DURING CONSTRUCTION, INCLUDING PROVISIONS FOR CHANGEABLE WEATHER UNTIL THE BUILDING IS ENCLOSED AND CONDITIONED. THE CONTRACTOR SHALL DESIGN, INSTALL AND SUBSEQUENTLY REMOVE ANY SHORING, SHEETING, TEMPORARY BRACING, GUYS OR TIEDOWNS NECESSARY TO MAINTAIN SAFETY AND STRUCTURAL STABILITY DURING CONSTRUCTION.

2. THE CONTRACTOR IS SOLELY RESPONSIBLE TO FOLLOW ALL APPLICABLE SAFETY CODES, BUILDING CODES AND GOVERNING REGULATIONS WITH JURISDICTION OVER THE CONSTRUCTION SITE DURING ALL PHASES OF CONSTRUCTION.

3. ANY FRAMING SHOWN ON DRAWINGS THAT SUPPORTS EQUIPMENT (WHETHER SUPPORTED ABOVE OR SUSPENDED BELOW), DESIGN LOADS, OPENINGS AND PENETRATIONS, AND STRUCTURAL MEMBERS IN ANY MANNER RELATED TO HVAC, PLUMBING, ELECTRICAL OR FIRE PROTECTION REQUIREMENTS IS BASED ON EQUIPMENT DESIGNED, SHOWN AND/OR SPECIFIED IN THE CONSTRUCTION DOCUMENTS. ALL REQUIRED FRAMING MAY NOT BE SHOWN. USING THE DETAILS PROVIDED ON THE STRUCTURAL DRAWINGS, THE GENERAL CONTRACTOR AND SUB-CONTRACTORS AND/OR EACH PRIME CONTRACTOR MUST COORDINATE AND INSTALL THE ACTUAL FRAMING REQUIRED FOR THE EQUIPMENT TO BE INSTALLED, AND INCLUDE COSTS FOR ALL REQUIRED FRAMING IN THE BID. IF THE CONTRACTOR REQUESTS AND RECEIVES APPROVAL TO SUBSTITUTE EQUIPMENT, THE CONTRACTOR MUST ALSO INSTALL THE FRAMING REQUIRED FOR THE SUBSTITUTED EQUIPMENT AS WELL, WITHOUT ADDITIONAL COST TO THE PROJECT, INCLUDING ANY AND ALL FEES REQUIRED BY THE ARCHITECT AND/OR ENGINEERS TO RE-DESIGN AND REVISE THE CONSTRUCTION DOCUMENTS.

4. SHOULD ANY OF THE DETAILED INSTRUCTIONS SHOWN ON THE PLANS CONFLICT WITH THESE STRUCTURAL NOTES, OR WITH EACH OTHER, THE STRICTEST PROVISION SHALL GOVERN.

5. DESIGN BASIS: 2015 IBC, INCLUDING ALL ADOPTED REFERENCE STANDARDS AND MATERIAL SPECIFICATIONS REFERENCED THEREIN.

6. DESIGN CRITERIA
   a. FLOOR LIVE LOADS

AREA	UNIFORM (PSF)	CONCENTRATED (POUNDS)
CONCRETE SLABS-ON-GRADE	100	1,000

   b. ROOF LOADING
      1. DESIGN ROOF LIVE LOAD (MINIMUM) 20 PSF
      2. ROOF SNOW LOADS:
         a. GROUND SNOW LOAD 108 PSF
         b. FLAT-ROOF SNOW LOAD 76 PSF
         c. SNOW EXPOSURE FACTOR 1.0
         d. SNOW LOAD IMPORTANCE FACTOR 1.0
         e. THERMAL FACTOR 1.0
      3. THE EFFECTS OF DRIFTING SNOW HAVE BEEN INCLUDED IN THE DESIGN.
      4. THE ROOF STRUCTURE HAS BEEN DESIGNED FOR THE ROOF LOADINGS INDICATED ABOVE SUCH THAT AN ADEQUATE ROOF SLOPE AND DRAINAGE SYSTEM ARE REQUIRED TO PREVENT PONDING LOADS WHICH MAY EXCEED THE DESIGN ROOF LOADS.
   c. WIND LOADING
      1. BASIC WIND SPEED 115 MPH.
      2. WIND IMPORTANCE FACTOR 1.0
      3. OCCUPANCY CATEGORY II
      4. WIND EXPOSURE CATEGORY C
      5. INTERNAL PRESSURE COEFFICIENT +0.18, −0.18
      6. COMPONENTS AND CLADDING (PRESSURES INDICATED ARE EDGE ZONE (BUILDING CORNER) SERVICE LOAD PRESSURES BASED ON A MINIMAL EFFECTIVE AREA AND MAY BE REDUCED ACCORDINGLY FOR INTERIOR ZONES AND LARGER EFFECTIVE AREAS):
         a. ROOF +17 PSF, −30 PSF
         b. WALLS +17 PSF, −22 PSF
   d. SEISMIC DESIGN CRITERIA
      1. SEISMIC IMPORTANCE FACTOR 1.0
      2. OCCUPANCY CATEGORY II
      3. MAPPED SPECTRAL RESPONSE ACCELERATIONS:
         a. SHORT PERIODS 0.387
         b. 1 SECOND PERIOD 0.15
      4. SITE CLASS D
      5. SPECTRAL RESPONSE COEFFICIENTS:
         a. DESIGN SPECTRAL RESPONSE ACCELERATION AT SHORT PERIODS = 0.557
         b. DESIGN SPECTRAL RESPONSE ACCELERATION AT 1 SECOND PERIOD = 0.33
      6. SEISMIC DESIGN CATEGORY D
      7. BASIC SEISMIC-FORCE-RESISTING-SYSTEM: LIGHT FRAMED WALLS SHEATHED WITH WOOD STRUCTURAL PANELS RATED FOR SHEAR RESISTANCE.
      8. DESIGN BASE SHEAR 3 KIPS
      9. SEISMIC RESPONSE COEFFICIENT, Cs 0.059
      10. RESPONSE MODIFICATION FACTOR, R 6-1/2
      11. ANALYSIS PROCEDURE: EQUIVALENT LATERAL FORCE PROCEDURE
   e. ALL NEW FRAMING MEMBERS HAVE BEEN DESIGNED TO MEET THE CODE MINIMUM LIVE LOAD AND TOTAL LOAD DEFLECTION CRITERIA.

7. SPECIAL INSPECTIONS: IN ACCORDANCE TO OBC CHAPTER 17, THE OWNER SHALL EMPLOY INSPECTION AGENCIES TO PERFORM SPECIAL INSPECTIONS DURING CONSTRUCTION INCLUDING INSPECTIONS OF SHOP-FABRICATED ITEMS WHEN APPLICABLE. ALL INSPECTION AGENCIES, INCLUDING FABRICATION FACILITIES WHEN REQUIRED, SHALL BE QUALIFIED AND APPROVED BY THE BUILDING OFFICIAL. THE FOLLOWING TYPES OF WORK REQUIRE SPECIAL INSPECTIONS (REFER TO OTHER DISCIPLINES FOR SPECIAL INSPECTIONS OF NON-STRUCTURAL SYSTEMS WHERE REQUIRED):
   a. SOILS.
   b. CONCRETE CONSTRUCTION.
   c. WOOD CONSTRUCTION.

8. COORDINATE ALL DIMENSIONS AND ELEVATIONS WITH THE ARCHITECTURAL DRAWINGS. SEE THE ARCHITECTURAL DRAWINGS FOR DIMENSIONS AND ELEVATIONS NOT SHOWN. ALL DIMENSIONS AND ELEVATIONS SHOWN ON THE STRUCTURAL DRAWINGS ARE INTENDED TO AUGMENT, NOT SUPERSEDE, THOSE SHOWN ON THE ARCHITECTURAL DRAWINGS. DO NOT SCALE THE DRAWINGS. DRAWINGS MAY NOT BE TO SCALE.

9. SHOP DRAWINGS
   a. SUBMIT FOUR COPIES OF THE FOLLOWING SHOP DRAWINGS TO THE ARCHITECT FOR REVIEW PRIOR TO FABRICATION (ONE COPY TO BE RETAINED BY THE ARCHITECT, ONE COPY TO BE RETAINED BY THE ENGINEER):
      1. CONCRETE REINFORCING AND MIX DESIGNS FOR EACH CLASS OF CONCRETE.
      2. PRE-ENGINEERED, PRE-FABRICATED WOOD "I" JOISTS AND OPEN WEB WOOD CHORD METAL WEB TRUSSES
   b. THE CONTRACTOR SHALL REVIEW AND ACCEPT FULL RESPONSIBILITY FOR DIMENSIONAL CORRECTNESS. ALL SHOP DRAWINGS MUST BEAR THE APPROVAL STAMP OF THE CONTRACTOR (TO INCLUDE INITIALS, DATE AND DISPOSITION), PRIOR TO REVIEW BY THE ARCHITECT OR ENGINEER. THE ENGINEER WILL RETURN ALL SHOP DRAWINGS, UNREVIEWED, THAT DO NOT BEAR THE APPROVAL STAMP OF THE CONTRACTOR.

10. ARCHITECTURAL ITEMS OR PREFABRICATED ITEMS SHOWN ON THE STRUCTURAL DRAWINGS ARE REFERENCED FOR GENERAL COORDINATION PURPOSES ONLY.
   a. TYPICAL REFERENCED ARCHITECTURAL ITEMS INCLUDE BUT MAY NOT BE LIMITED TO: DRAINS, DRAIN TILES, FINISHES, DOORS, WINDOWS, AND ITEMS FOR THERMAL AND MOISTURE PROTECTION. SEE ARCHITECTURAL DRAWINGS AND SPECIFICATIONS FOR MATERIAL REQUIREMENTS, PLACEMENT AND EXACT LOCATION OF SUCH ITEMS.
   b. TYPICAL REFERENCED PREFABRICATED ITEMS INCLUDE BUT MAY NOT BE LIMITED TO: STAIRS, HANDRAILS, CURTAIN WALL/STOREFRONT SYSTEMS, AWNINGS, PREFABRICATED FRAMING AND COLD-FORMED STEEL FRAMING. SUCH SYSTEMS SHALL BE DESIGNED, FURNISHED AND INSTALLED AS REQUIRED BY OTHER PORTIONS OF THE CONTRACT DOCUMENTS.

B. FOUNDATIONS

1. NOTIFY THE ARCHITECT AS SOON AS POSSIBLE OF ANY UNUSUAL SOIL CONDITIONS SUCH AS UNEXPECTED SPRING OR SEEPAGE WATER, OR SOIL OF QUESTIONABLE BEARING CAPACITY.

2. BEAR ALL FOOTINGS ON FIRM UNDISTURBED SOIL OR ENGINEERED FILL HAVING A MINIMUM ALLOWABLE BEARING CAPACITY OF 2,000 POUNDS PER SQUARE FOOT.

3. BEAR PERIMETER FOOTINGS A MINIMUM OF 2'-6" BELOW EXTERIOR GRADE. STEP FOOTINGS AS REQUIRED TO COMPLY, REGARDLESS OF FOOTING STEPS AND GRADES SHOWN ON THE DRAWINGS.

4. STEP THE TOPS OF ALL FOOTINGS BELOW UTILITY INVERT ELEVATIONS SO AS NOT TO INTERFERE WITH FOOTING SIZE AND REINFORCING. COORDINATE LOCATIONS AND ELEVATIONS OF FOOTING STEPS WITH ARCHITECTURAL AND PLUMBING DRAWINGS. WHERE UTILITY TRENCHES PASS BENEATH FOOTINGS OR OCCUR BELOW ADJACENT BUILDING FOUNDATIONS, FILL UTILITY EXCAVATIONS WITH CLASS IV CONCRETE FOR FULL WIDTH OF EXCAVATION TO THE UNDERSIDE OF FOOTINGS OR THE UNDERSIDE OF ADJACENT BUILDING FOUNDATIONS. EXTEND CLASS IV CONCRETE FILL FULL WIDTH AND LENGTH OF FOUNDATION PLUS 1'-6" BEYOND THE EDGE OF FOUNDATION EACH SIDE. PROVIDE A MINIMUM OF 2" SEMI-COMPRESSIBLE MATERIAL AROUND UNDERGROUND UTILITIES ENCASED IN CLASS IV CONCRETE FILL.

5. REFERENCE GEOTECHNICAL EVALUATION GVD COMMERCIAL BUILDING; US 95 & SCHWEITZER CUTOFF ROAD BY ALLWEST TESTING & ENGINEERING DATED JULY 9, 2013.

6. KEEP FOUNDATION EXCAVATIONS FREE OF WATER AT ALL TIMES. REPLACE SOFT OR WEAKENED SOIL WITH CLASS IV CONCRETE OR ENGINEERED FILL.

7. THE EXISTENCE OF UNDERGROUND STRUCTURES AND/OR UTILITIES IS NOT KNOWN. USE EXTREME CARE WHEN EXCAVATING SO AS NOT TO DISTURB ANY EXISTING UNDERGROUND STRUCTURES AND/OR UTILITIES. COORDINATE WITH THE SURVEY AND WITH THE OWNER TO OBTAIN ANY INFORMATION AVAILABLE REGARDING EXISTING UTILITIES.

C. REINFORCED CONCRETE

1. ALL CONCRETE CONSTRUCTION SHALL CONFORM TO THE LATEST, ADOPTED EDITIONS OF THE STANDARDS AND MATERIAL SPECIFICATIONS REFERENCED HEREIN.

2. REFERENCE STANDARDS BY THE AMERICAN CONCRETE INSTITUTE (ACI)
   a. ACI 301, "SPECIFICATIONS FOR STRUCTURAL CONCRETE," EXCEPT AS SPECIFICALLY MODIFIED IN THE SPECIFICATIONS AND/OR HEREIN.
   b. ACI 318, "BUILDING CODE REQUIREMENTS FOR STRUCTURAL CONCRETE."
   c. ACI 305, "HOT WEATHER CONCRETING" AND ACI 306, "COLD WEATHER CONCRETING."
   d. ACI 315, "DETAILS AND DETAILING OF CONCRETE REINFORCEMENT" UNLESS DETAILED OTHERWISE ON THE STRUCTURAL DRAWINGS.

3. MATERIALS
   a. STRUCTURAL CONCRETE

CLASS	LOCATION	f'c (psi)
I	FOOTINGS	3,000
II	INTERIOR SLABS ON GRADE AND ALL INTERIOR CONCRETE NOT OTHERWISE IDENTIFIED	3,500
III	EXTERIOR SLABS ON GRADE AND ALL EXTERIOR CONCRETE NOT OTHERWISE IDENTIFIED	4,500 (with air)
IV	BACKFILL BELOW FOOTINGS	1,500

   b. ALL DEFORMED REINFORCING BARS: ASTM A615, GRADE 60.
   c. ALL WELDED WIRE FABRIC: ASTM A1064, DELIVERED IN FLAT SHEETS.

4. FIELD MANUAL: PROVIDE AT LEAST ONE COPY OF THE ACI FIELD REFERENCE MANUAL, SP-15, IN THE FIELD OFFICE AT ALL TIMES.

5. FOOTINGS
   a. PROVIDE AND INSTALL DOWELS IN CONCRETE FOOTINGS TO MATCH VERTICAL FOUNDATION WALL REINFORCING.
      1. WHERE CONCRETE IS CONSTRUCTED ON TOP OF FOOTINGS PROVIDE 48 BAR DIAMETER REINFORCING LAP SPLICES BETWEEN DOWELS AND VERTICAL WALL REINFORCING.
   b. INSTALL CORNER BARS AT FOOTING AND FOUNDATION WALL CORNERS TO MATCH HORIZONTAL REINFORCING. LAP CORNER BARS 48 BAR DIAMETERS WITH HORIZONTAL FOUNDATION WALL AND FOOTING REINFORCING.
   c. INSTALL LEAN CONCRETE (CLASS IV) UNDER FOUNDATIONS FOR ACCIDENTAL OVER-EXCAVATION, SOFT SPOTS AND TRENCHES.

6. PROVIDE 48 BAR DIAMETER LAP SPLICES AT ENDS OF CONTINUOUS HORIZONTAL AND VERTICAL REINFORCING.

7. CONCRETE COVER: UNLESS NOTED OTHERWISE, DETAIL REINFORCING TO PROVIDE MINIMUM CONCRETE COVER AS FOLLOWS:
   a. CONCRETE CAST AGAINST AND PERMANENTLY EXPOSED TO EARTH 3 INCHES
   b. CONCRETE EXPOSED TO EARTH OR WEATHER
      #5 BARS AND SMALLER 1-1/2 INCHES
      OTHERS 2 INCHES

E. STRUCTURAL STEEL

1. ALL STEEL CONSTRUCTION SHALL COMPLY WITH THE LATEST, ADOPTED EDITIONS OF THE STANDARDS AND MATERIAL SPECIFICATIONS REFERENCED HEREIN.

2. REFERENCE STANDARDS
   a. ANSI/AISC 360, "SPECIFICATION FOR STRUCTURAL STEEL BUILDINGS" BY THE AMERICAN INSTITUTE OF STEEL CONSTRUCTION, INC. (AISC).
   b. AISC 303, "CODE OF STANDARD PRACTICE FOR STEEL BUILDINGS AND BRIDGES" BY THE AMERICAN INSTITUTE OF STEEL CONSTRUCTION, INC. (AISC).
   c. "SPECIFICATION FOR STRUCTURAL JOINTS USING ASTM A325 OR A490 BOLTS" BY THE RESEARCH COUNCIL ON STRUCTURAL CONNECTIONS (RCSC).
   d. AWS D1.1, "STRUCTURAL WELDING CODE" BY THE AMERICAN WELDING SOCIETY (AWS).

3. MATERIALS
   a. ANGLES, PLATES AND BARS: Fy = 36 KSI, ASTM A36.
   b. PIPE: Fy = 35 KSI,ASTM A53, GRADE B.
   c. HIGH STRENGTH BOLTS: ASTM A325 OR A490.
   d. ANCHOR RODS: ASTM F1554, GRADE 36.
   e. THREADED RODS: ASTM A36, Fy = 36 KSI.
   f. NUTS: ASTM A563.
   g. WASHERS: ASTM F436.
   h. ELECTRODES: SERIES E70.
   i. CHEMICAL ADHESIVE ANCHORS: HILTI HIT-RE 500-SD.

4. THE CONTRACTOR, FABRICATOR OR ERECTOR SHALL NOTIFY THE ENGINEER OF RECORD AND THE OWNER'S DESIGNATED CONSTRUCTION REPRESENTATIVE IF CHANGES ARE REQUIRED TO THE STRUCTURAL STEEL FRAME TO ALLOW ERECTION TO CONFORM TO OSHA REGULATIONS, INCLUDING SUB-PART R. BIDS SHALL BE BASED ON THE ERECTION METHOD CHOSEN BY THE CONTRACTOR OR ERECTOR. BASE BIDS TO INCLUDE THE COST FOR MODIFICATION OF THE STRUCTURAL STEEL, STEEL JOISTS, JOIST GIRDERS, STEEL DECK OR LATERAL-LOAD-RESISTING SYSTEM BASED ON THE CHOSEN METHOD OF ERECTION.

5. REFER TO ARCHITECTURAL DRAWINGS FOR MISCELLANEOUS STEEL (LADDERS, BOLLARDS, GRATING, HANDRAILS, ETC.).

F. STRUCTURAL LUMBER

1. ALL STRUCTURAL LUMBER CONSTRUCTION SHALL CONFORM TO THE LATEST, ADOPTED EDITIONS OF THE STANDARDS AND MATERIAL SPECIFICATIONS REFERENCED HEREIN.

2. REFERENCE STANDARD
   a. NDS, "NATIONAL DESIGN SPECIFICATION FOR WOOD CONSTRUCTION" BY THE AMERICAN FOREST & PAPER ASSOCIATION (AF & PA).

3. MATERIALS
   a. ALL LUMBER SHALL COMPLY WITH THE REQUIREMENTS OF DOC PS 20. FURNISH LUMBER WITH EACH PIECE FACTORY-MARKED WITH GRADE STAMP OF INSPECTION AGENCY VERIFYING COMPLIANCE WITH GRADING RULE REQUIREMENTS AND IDENTIFYING GRADING AGENCY, GRADE, SPECIES, MOISTURE CONTENT AND MILL.
   b. ALL WOOD STRUCTURAL PANELS SHALL COMPLY WITH REQUIREMENTS OF DOC PS 1, DOC PS 2, HPVA HP I AND APA PDS. FACTORY-MARK ALL WOOD STRUCTURAL PANELS WITH A GRADING STAMP OF THE INSPECTION AGENCY.
   c. STUDS: DOUG-FIR, STUD GRADE OR BETTER, ACCORDING TO THE NATIONAL LUMBER GRADES AUTHORITY (NLGA), SEASONED AT 19% M.C.
   d. STRUCTURAL LUMBER: SPRUCE-PINE-FIR NO. 2 OR BETTER, ACCORDING TO THE NATIONAL LUMBER GRADES ASSOCIATION (NLGA), SEASONED AT 19% M.C.
   e. WOOD STRUCTURAL PANELS (PLYWOOD OR ORIENTED STRAND BOARD):
      1. ROOF: 7/8" , APA RATED SHEATHING, 60/32, EXPOSURE 1, U.N.O.
      2. WALL: 15/32" (1/2" NOMINAL), APA RATED SHEATHING, 32/16, EXPOSURE 1.
   f. FASTENERS
      1. NAILS: COMMON STEEL WIRE NAILS, CONFORMING TO ASTM F1667.
      2. WOOD SCREWS: FLAT HEAD, CONFORMING TO ANSI/ASME STANDARD B18.6.1.
      3. BOLTS, NUTS AND WASHERS: CONFORM TO ASTM A307, ASTM A563 AND ASTM F436, RESPECTIVELY.
   g. WOOD-PRESERVATIVE TREATMENT: COMPLY WITH THE APPLICABLE REQUIREMENTS OF AWPA STANDARD U1. MARK EACH TREATED ITEM WITH THE APPROPRIATE QUALITY MARK.

4. CONNECTIONS: AS A MINIMUM, CONFORM CONNECTIONS FOR STRUCTURAL MEMBERS TO THE FASTENING SCHEDULE LISTED IN TABLE 2304.9.1 OF THE OHIO BUILDING CODE.
   a. PROVIDE GALVANIZED CONNECTORS BY THE SIMPSON STRONG-TIE CO. INSTALL ALL CONNECTORS IN ACCORDANCE WITH THE MANUFACTURER'S RECOMMENDATIONS.
   b. WOOD STRUCTURAL PANELS TO WOOD ROOF JOISTS AND TRUSSES: NAILED, USE 10d COMMON NAILS SPACED AT 6 INCHES O.C. AT PANEL EDGES AND 12 INCHES O.C. AT INTERMEDIATE SUPPORTS. INSTALL PLYWOOD CLIPS AT MID-SPAN OF PLYWOOD BETWEEN SUPPORTS.
   c. WOOD STRUCTURAL PANELS TO WOOD STUDS: USE 8d COMMON NAILS SPACED AT 6 INCHES O.C. AT PANEL EDGES AND 12 INCHES O.C. AT INTERMEDIATE SUPPORTS. BLOCK ALL EDGES WITH FULL-DEPTH BLOCKING.
   d. PROVIDE GALVANIZED FASTENERS FOR ALL EXTERIOR APPLICATIONS AND FOR ALL WOOD-PRESERVATIVE TREATED MATERIALS.
   e. AT POSTS AND JAMBS OF OPENINGS, NAIL MULTIPLE STUDS TOGETHER WITH 8d NAILS AT 8" O.C., FULL LENGTH.

5. MISCELLANEOUS
   a. INSTALL FULL-DEPTH SOLID BLOCKING AT JOIST BEARING LOCATIONS. INSTALL ONE LINE OF SOLID BLOCKING OR CROSS BRIDGING AT 8'-0" O.C. MAX. FOR ALL JOISTS.
   b. AT ALL EXTERIOR STUD WALLS AND INTERIOR BEARING WALLS, INSTALL A CONTINUOUS LINE OF SOLID BLOCKING AT MID-HEIGHT OF THE WALL, BUT AT NO GREATER THAN 5'-0" ON CENTER MAXIMUM.
   c. UNLESS NOTED OTHERWISE, INSTALL MINIMUM DOUBLE JACK BEARING STUDS UNDER EACH END OF ALL BEAMS, BUT NOT LESS THAN THE NUMBER REQUIRED TO PROVIDE FULL-WIDTH SOLID BEARING OF THE SUPPORTED MEMBERS.
   d. INSTALL STANDARD THREE-STUD CORNER CONSTRUCTION AT INSIDE AND OUTSIDE CORNERS, PROVIDING NAILING SURFACES FOR SHEATHING. INSTALL BLOCKING AS REQUIRED.
   e. AT DOOR AND WINDOW OPENINGS IN EXTERIOR WALLS OR INTERIOR BEARING WALLS, INSTALL A MINIMUM OF ONE JACK BEARING STUD AND TWO FULL-HEIGHT KING STUDS AT EACH END OF HEADERS, UNLESS NOTED OR SCHEDULED OTHERWISE.
   f. UNLESS NOTED OTHERWISE, AT BOTH EXTERIOR WALLS AND INTERIOR BEARING WALLS, INSTALL TRIPLE 2 X 8 HEADERS OVER OPENINGS IN 2 X 6 STUD WALLS.
   g. INSTALL ONE LAYER OF 1/2" THICK WOOD STRUCTURAL PANEL BETWEEN EACH MEMBER OF DIMENSIONAL LUMBER HEADERS.
   h. TREAT ALL EXTERIOR LUMBER OR LUMBER IN CONTACT WITH CONCRETE OR MASONRY WITH PRESERVATIVE IN ACCORDANCE WITH AWPA.
   i. INSTALL WOOD STRUCTURAL PANEL WALL SHEATHING ON ALL EXTERIOR WALLS.
   j. EXTEND MULTIPLE BEARING STUDS CONTINUOUSLY FROM SUPPORTED MEMBER DOWN TO CONCRETE FOUNDATION WALLS.
   k. PROVIDE AND INSTALL TEMPORARY AND PERMANENT BRACING FOR PRE-ENGINEERED, PRE-FABRICATED WOOD I-JOISTS AS INDICATED ON THE JOIST MANUFACTURER'S APPROVED SHOP DRAWINGS.
   l. HOT-DIP GALVANIZE ALL STEEL CONNECTORS AND PRODUCTS 14 GA. AND THICKER AFTER FABRICATION THAT ARE IN CONTACT WITH PRESERVATIVE-TREATED WOOD. PROVIDE MINIMUM 2.0 OZ. COATING, ALL SIDES, PER ASTM A123. PROVIDE HOT-DIPPED GALVANIZED CONNECTORS PER ASTM A153 OR STAINLESS STEEL CONNECTORS.

      HOT-DIP GALVANIZE ALL STEEL CONNECTORS AND PRODUCTS LESS THAN 14 GA. THICK AFTER FABRICATION THAT ARE IN CONTACT WITH PRESERVATIVE-TREATED WOOD. PROVIDE MINIMUM 1.85 OZ. COATING, ALL SIDES, PER ASTM A653. PROVIDE HOT-DIPPED GALVANIZED CONNECTORS PER ASTM A153 OR STAINLESS STEEL CONNECTORS.

6. LVL INDICATES LAMINATED VENEER LUMBER (MICRO-LAM MEMBER BY REDBUILT, OR EQUAL). CONNECT MULTIPLE MEMBERS TOGETHER AS FOLLOWS:
   a. DOUBLE MEMBERS: NAILED, USING 16d NAILS SPACED AT 12" O.C., TOP AND BOTTOM, LOCATED 2" FROM TOP AND BOTTOM OF BEAM.
   b. TRIPLE MEMBERS: BOLTED, USING 1/2" DIAMETER BOLTS SPACED AT 24" O.C., TOP AND BOTTOM, LOCATED 2" FROM TOP AND BOTTOM OF BEAM.

G. PRE-ENGINEERED, PRE-FABRICATED WOOD "I" JOISTS AND OPEN WEB WOOD CHORD METAL WEB TRUSSES

1. THE DESIGN, FABRICATION AND INSTALLATION OF ALL PRE-ENGINEERED, PREFABRICATED WOOD "I" JOISTS AND OPEN WEB WOOD CHORD METAL WEB TRUSSES SHALL CONFORM TO THE LATEST, ADOPTED EDITIONS OF THE STANDARDS AND MATERIAL SPECIFICATIONS REFERENCED HEREIN.

2. REFERENCE STANDARDS
   a. NDS, "NATIONAL DESIGN SPECIFICATION FOR WOOD CONSTRUCTION" BY THE AMERICAN FOREST & PAPER ASSOCIATION (AF & PA).

3. MATERIALS
   a. WOOD "I" JOISTS
      1. THE TERM "I" JOIST USED IN THIS SECTION APPLIES TO "I" JOISTS THAT ARE DESIGNED AND FABRICATED AS SEPARATE ENGINEERED PRODUCTS, AND DELIVERED TO THE PROJECT SITE FOR INSTALLATION.
      2. "I" JOIST MEMBER SIZES INDICATED ON DRAWINGS ARE BASED ON PRODUCTS OF REDBUILT.
      3. WOOD FLANGES: LAMINATED VENEER LUMBER
      4. WOOD WEBS: OSB SHEATHING
      5. ADHESIVE: WATERPROOF, CONFORMING TO ASTM D2559
   b. OPEN WEB WOOD CHORD METAL WEB TRUSSES
      1. THE TERM OPEN WEB WOOD CHORD METAL WEB TRUSS USED IN THIS SECTION APPLIES TO OPEN WEB WOOD CHORD METAL WEB TRUSSES THAT ARE DESIGNED AND FABRICATED AS SEPARATE ENGINEERED PRODUCTS, AND DELIVERED TO THE PROJECT SITE FOR INSTALLATION.
      2. OPEN WEB WOOD CHORD METAL WEB TRUSS SIZES INDICATED ON DRAWINGS ARE BASED ON PRODUCTS OF REDBUILT.
      3. WOOD CHORDS: MACHINE STRESS-RATED LUMBER, MAXIMUM MOISTURE CONTENT 19% OR LAMINATED VENEER LUMBER (LVL).
      4. STEEL WEBS AND TUBULAR STEEL ACCESSORIES: DIE STAMPED FROM ELECTRICALLY WELDED, COLD ROLLED STEEL TUBING HAVING A MINIMUM YIELD STRESS OF 45,000 PSI.

4. DESIGN
   a. THE "I" JOIST/OPEN WEB WOOD CHORD METAL WEB TRUSS MANUFACTURER SHALL DESIGN, DETAIL, PROVIDE AND INSTALL ALL INTERNAL "I" JOIST/OPEN WEB WOOD CHORD METAL WEB TRUSS COMPONENT CONNECTIONS.
   b. THE "I" JOIST/OPEN WEB WOOD CHORD METAL WEB TRUSS MANUFACTURER SHALL DESIGN AND DESIGNATE ALL JOIST-TO-JOIST (OR TRUSS-TO-TRUSS) HANGERS. THE CONTRACTOR SHALL FURNISH AND INSTALL ALL JOIST-TO-JOIST (OR TRUSS-TO-TRUSS) HANGERS IN ACCORDANCE WITH THE HANGER MANUFACTURER'S SPECIFICATIONS.
   c. IN ADDITION TO THE UNIFORM LOADS INDICATED BELOW, DESIGN "I" JOISTS/OPEN WEB WOOD CHORD METAL WEB TRUSSES FOR ALL SUPERIMPOSED DEAD LOADS INCLUDING BUT NOT LIMITED TO OVERLAY FRAMING, CHIMNEYS, MECHANICAL EQUIPMENT, ETC. DESIGN "I" JOISTS/OPEN WEB WOOD CHORD METAL WEB TRUSSES FOR THE EFFECTS OF DRIFTING SNOW WHERE APPLICABLE. DESIGN "I" JOISTS/ OPEN WEB WOOD CHORD METAL WEB TRUSSES AND REQUIRED BRACING TO RESIST THE NET WIND UPLIFT INDICATED ON THE DRAWINGS.
   d. DESIGN OF MEMBERS AND CONNECTIONS SHALL BE PERFORMED BY A PROFESSIONAL ENGINEER, REGISTERED IN THE STATE OF THE PROJECT, EXPERIENCED IN SIMILAR DESIGN, RETAINED BY THE MANUFACTURER.
   e. DESIGN ALL "I" JOISTS/OPEN WEB WOOD CHORD METAL WEB TRUSSES FOR ADDITIONAL SERVICE LOADS INDICATED ON PLAN.

5. DESIGN LOADS
   a. ROOF LOADS:
      1. DEAD LOAD: 15 PSF
      2. TOP CHORD LIVE LOAD: SEE PARAGRAPH A.6.b, GENERAL NOTES
      3. WIND LOADING:
         a. GROSS WIND UPLIFT: SEE PARAGRAPH A.6.C, GENERAL NOTES
   b. DEFLECTIONS
      1. ROOF
         a. MAXIMUM LIVE LOAD DEFLECTION: L/360
         b. MAXIMUM TOTAL LOAD DEFLECTION: L/240

6. SUBMITTALS
   a. SUBMIT "I" JOIST/OPEN WEB WOOD CHORD METAL WEB TRUSS SHOP DRAWINGS WHICH EXHIBIT THE SEAL OF THE ENGINEER RESPONSIBLE FOR THE "I" JOIST/OPEN WEB WOOD CHORD METAL WEB TRUSS DESIGN.
   b. SUBMIT LAYOUT DRAWING WHICH INDICATES THE LOCATION OF EACH "I" JOIST/OPEN WEB WOOD CHORD METAL WEB TRUSS.
   c. SUBMIT HANGER CONNECTOR TYPES AND LOCATIONS.
   d. INDICATE ALL ACCESSORIES, HANGERS AND/OR BRACING REQUIREMENTS OF "I" JOIST/OPEN WEB WOOD CHORD METAL WEB TRUSS MEMBERS.

H. STEEL DECKING

1. THE DESIGN, FABRICATION AND INSTALLATION OF STEEL DECKING CONSTRUCTION SHALL CONFORM TO THE LATEST, ADOPTED EDITIONS OF THE STANDARDS AND MATERIAL SPECIFICATIONS HEREIN.

2. REFERENCE STANDARDS
   a. NAS, "NORTH AMERICAN SPECIFICATION FOR THE DESIGN OF COLD-FORMED STEEL STRUCTURAL MEMBERS" BY THE AMERICAN IRON AND STEEL INSTITUTE (AISI).
   b. "DESIGN MANUAL FOR COMPOSITE DECKS, FORM DECKS AND ROOF DECKS" BY THE STEEL DECK INSTITUTE (SDI).
   c. AWS D1.3, "STRUCTURAL WELDING CODE" BY THE AMERICAN WELDING SOCIETY (AWS).

3. MATERIALS
   a. STEEL SHEET CONFORMING TO ASTM A653 FOR GALVANIZED DECKING.
   b. GALVANIZED FINISHES: CONFORM TO ASTM A653, G90.
   c. ACCESSORIES: SAME MATERIAL AND FINISH AS DECKING UNITS.

4. ROOF DECK CONSTRUCTION LOADS SHALL NOT EXCEED A CONCENTRATED SERVICE LOAD OF 200 POUNDS AT MID-SPAN OF A ONE-FOOT WIDE SECTION OF DECKING NOR THE UNIFORM DESIGN LIVE LOAD INDICATED IN PARAGRAPH A.6.b.

5. ATTACHMENT TO SUPPORTING MEMBERS: ATTACH ALL ENDS AND END LAPS TO SUPPORTS BY SCREWING FROM TOP SIDE ONLY. SIDELAP FASTENERS SHALL BE EQUALLY SPACED BETWEEN SUPPORT FASTENERS. REFER TO THE DRAWINGS FOR SPECIFIC FASTENING REQUIREMENTS.

TD&H Engineering
tdhengineering.com
GREAT FALLS-BOZEMAN-KALISPELL MONTANA
SPOKANE WASHINGTON
LEWISTON IDAHO

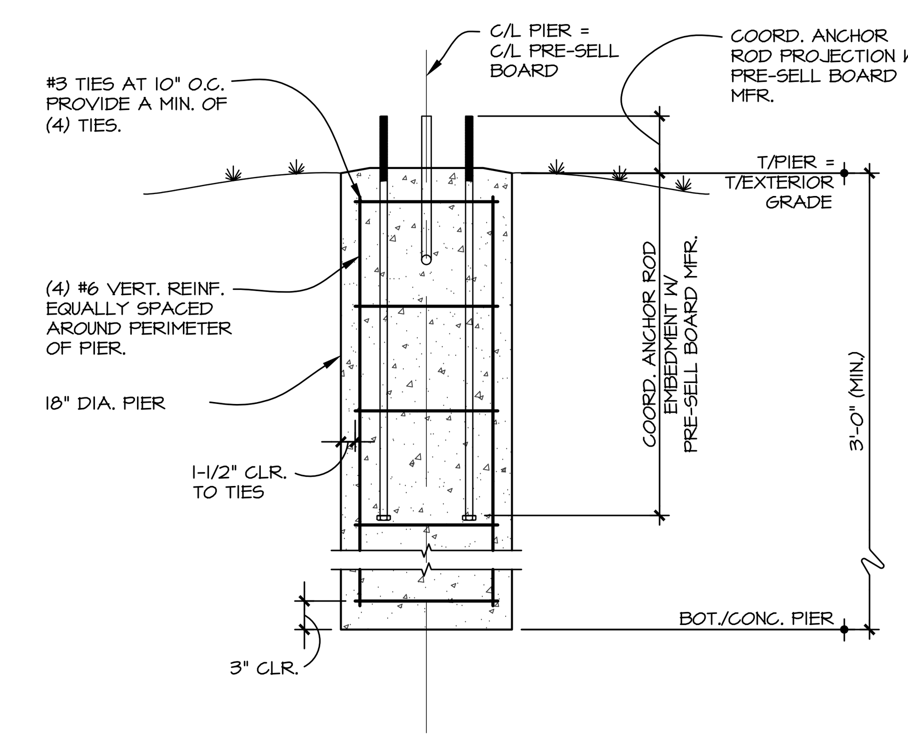

01 PRE-SELL BOARD FOUNDATION DETAIL
SCALE: N.T.S.

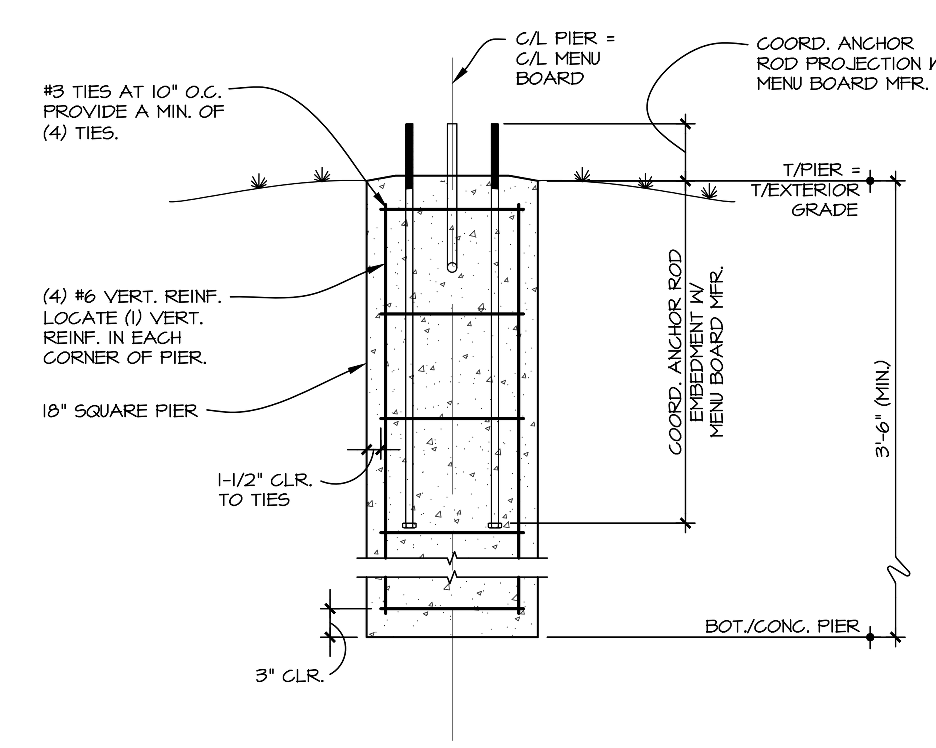

02 MENU BOARD FOUNDATION DETAIL
SCALE: N.T.S.

SITE NUMBER:	12281
BASE MDL:	SMART 55 - SQUARE 2017
ASSET TYPE:	FRANCHISEE
CLASSIFICATION:	NEW
OWNER:	WENSPOK
BASE VERSION:	2017
UPGRADE CLASSIFICATION:	NEW BUILD
PROJECT YEAR:	2020
FURNITURE PACKAGE:	2016 V3
DRAWING RELEASE	JANUARY 2020

Russell C. Page ARCHITECTS
204 N. Division Street, Suite 'E'
Spokane, WA 99202
(509) 467-9748 Fx: (509) 467-9817

PROJECT TYPE: NEW SMART 55 SQE

Wendy's
HIGHWAY 95
PONDERAY, ID 83852

REV. DATE DESCRIPTION

ISSUE DATE: 8-10-2020
PROJECT NUMBER: 20-113
DRAWN BY: GXG
CHECKED BY: LWF

SEAL
PROFESSIONAL ENGINEER LICENSED 14312 STATE OF IDAHO LEE FRENCH
8/10/20

SHEET NAME
STRUCTURAL NOTES AND SECTIONS

SHEET NUMBER
S0.1

8/10/2020, 11:59 AM, C:\AUTODESK TEMP\AcPublish_4981250_SMART 55_SQUARE_S0_1_Structural Notes and Sections.dwg, GXG

STATEMENT OF SPECIAL INSPECTIONS

1. SPECIAL INSPECTION AND TESTING SHALL BE PROVIDED BY THE OWNER IN ACCORDANCE WITH CHAPTER 17 OF THE IBC.
2. ALL INSPECTIONS SHALL BE PERFORMED BY EXPERIENCED PERSONNEL MEETING THE REQUIREMENTS OF THE IBC AND AC291 "ACCREDITATION CRITERIA FOR SPECIAL INSPECTION AGENCIES" AND SHALL BE APPROVED BY THE BUILDING OFFICIAL.
3. SPECIAL INSPECTIONS ARE NOT REQUIRED FOR WORK OF A MINOR NATURE (AS APPROVED BY THE BUILDING OFFICIAL) OR FOR GROUP U OCCUPANCIES.
4. EACH CONTRACTOR RESPONSIBLE FOR THE CONSTRUCTION OF A MAIN WIND OR SEISMIC FORCE RESISTING SYSTEM SHALL SUBMIT A WRITTEN STATEMENT OF RESPONSIBILITY TO THE BUILDING OFFICIAL AND THE OWNER PRIOR TO THE COMMENCEMENT OF WORK AS OUTLINED IN 1704.4 OF THE IBC.
5. IT IS THE RESPONSIBILITY OF THE CONTRACTOR TO NOTIFY THE SPECIAL INSPECTOR OR SPECIAL INSPECTION AGENCY AT LEAST TWO WORKING DAYS PRIOR TO PERFORMING ANY WORK THAT REQUIRES SPECIAL INSPECTION. ALL WORK PERFORMED WITHOUT THE REQUIRED SPECIAL INSPECTION IS SUBJECT TO REMOVAL.
6. WHEN REQUIRED BY THE PROVISIONS OF SECTION 1704.6.1 OR 1704.6.2, THE OWNER SHALL EMPLOY A REGISTERED DESIGN PROFESSIONAL TO PERFORM STRUCTURAL OBSERVATIONS (THIS DOES NOT INCLUDE OR WAIVE THE RESPONSIBILITY FOR INSPECTIONS).
7. PER 2015 IBC 1705.3 EXCEPTION: SPECIAL INSPECTIONS AND TESTS SHALL NOT BE REQUIRED FOR ISOLATED SPREAD CONCRETE FOOTINGS AND CONTINUOUS CONCRETE FOOTINGS WHEN SUPPORTING LIGHT FRAME CONSTRUCTION. NOTE: ALL FOOTINGS HAVE BEEN DESIGNED USING 2500 PSI.

TABLE 1705.2.3
REQUIRED SPECIAL INSPECTIONS OF OPEN-WEB STEEL JOISTS AND JOIST GIRDERS

APPLIES	TYPE	CONTINUOUS SPECIAL INSPECTION	PERIODIC SPECIAL INSPECTION	REFERENCED STANDARD[a]
	1. INSTALLATION OF OPEN-WEB STEEL JOIST AND JOIST GIRDERS.			
X	A. END CONNECTIONS – WELDING OR BOLTED	–	X	SJI SPECIFICATIONS LISTED IN SECTION 2207.1.
X	B. BRIDGING – HORIZONTAL OR DIAGONAL	–		
X	1. STANDARD BRIDGING	–	X	SJI SPECIFICATIONS LISTED IN SECTION 2207.1.
	2. BRIDGING THAT DIFFERS FROM THE SJI SPECIFICATIONS LISTED IN SECTION 2207.1.		X	

FOR SI: 1 INCH = 25.4 MM
(a) WHERE APPLICABLE, SEE ALSO SECTION 1705.12, SPECIAL INSPECTIONS FOR SEISMIC RESISTANCE.

CONCRETE SPECIAL INSPECTIONS AND TESTS ARE NOT REQUIRED FOR:
1) ISOLATED SPREAD CONCRETE FOOTINGS OF BUILDINGS THREE STORIES OR LESS ABOVE GRADE SUPPORTED ON ROCK OR EARTH.
2) CONTINUOUS CONCRETE FOOTINGS SUPPORTING WALLS OF BUILDINGS THREE STORIES OR LESS ABOVE GRADE SUPPORTED ON ROCK OR EARTH WHERE:
   2.1. THE FOOTINGS SUPPORT LIGHT FRAMED CONSTRUCTION
   2.2. THE FOOTINGS ARE DESIGNED IN ACCORDANCE WITH TABLE 1809.7.
   2.3. THE STRUCTURAL DESIGN OF THE FOOTING IS BASED ON AN f'_c NOT MORE THAN 2,500 PSI, REGARDLESS OF THE STRENGTH SPECIFIED.
3) NONSTRUCTURAL CONCRETE SLABS DIRECTLY SUPPORTED ON GROUND.

TABLE 1705.3
REQUIRED SPECIAL INSPECTIONS AND TESTS OF CONCRETE CONSTRUCTION

APPLIES	TYPE	CONTINUOUS SPECIAL INSPECTION	PERIODIC SPECIAL INSPECTION	REFERENCED STANDARD[b]	IBC REFERENCE
X	1. INSPECTION REINFORCEMENT, INCLUDING PRESTRESSING TENDONS, AND VERIFY PLACEMENT.	–	X	ACI 318 CH.20, 25.2, 25.3, 26.6.1–26.6.3	1908.4
	2. REINFORCING BAR WELDING: A. VERIFY WELDABILITY OF REINFORCING BARS OTHER THAN ASTM A706; B. INSPECT SINGLE-PASS FILLET WELDS, MAXIMUM 5/16"; AND C. INSPECT ALL OTHER WELDS.	– X	X X X	AWS D1.4 ACI 318: 26.6.4	–
X	3. INSPECTION OF ANCHORS CAST IN CONCRETE.	–	X	ACI 318: 17.8.2	–
X	4. INSPECT ANCHORS POST-INSTALLED IN HARDENED CONCRETE MEMBERS[a] A. ADHESIVE ANCHORS INSTALLED IN HORIZONTALLY OR UPWAROLY INCLINED ORIENTATIONS TO RESIST SUSTAINED TENSION LOADS. B. MECHANICAL ANCHORS AND ADHESIVE ANCHORS NOT DEFINED IN 4.a.	X	 X	ACI 318: 17.8.2.4 ACI 318: 17.8.2	–
X	5. VERIFYING USE OF REQUIRED DESIGN MIX.	–	X	ACI 318: CH.19, 26.4.3, 26.4.4	1904.1, 1904.2, 1908.2, 1908.3
X	6. PRIOR TO CONCRETE PLACEMENT, FABRICATE SPECIMENS FOR STRENGTH TESTS, PERFORM SLUMP AND AIR CONTENT TESTS, AND DETERMINE THE TEMPERATURE OF THE CONCRETE.	X	–	ASTM C172 ASTM C31 ACI 318: 26.4, 26.12	1908.10
X	7. INSPECT CONCRETE AND SHOTCRETE PLACEMENT FOR PROPER APPLICATION TECHNIQUES.	X	–	ACI 318: 26.5	1908.6, 1908.7, 1908.8
X	8. VERIFY MAINTENANCE OF SPECIFIED CURING TEMPERATURE AND TECHNIQUES.	–	X	ACI 318: 26.5.3–26.5.5	1908.9
	9. INSPECT PRESTRESSED CONCRETE FOR: A. APPLICATION OF PRESTRESSED FORCES; AND B. GROUTING OF BONDED PRESTRESSING TENDONS.	 X X	 – –	ACI 318: 26.10	–
	10. INSPECT ERECTION OF PRECAST CONCRETE MEMBERS.	–	X	ACI 318: CH. 26.8	–
	11. VERIFICATION OF IN-SITU CONCRETE STRENGTH, PRIOR TO STRESSING OF TENDONS IN POST-TENSIONED CONCRETE AND PRIOR TO REMOVAL OF SHORES AND FORMS FROM BEAMS AND STRUCTURAL SLABS.	–	X	ACI 318: 26.11.2	–
X	12. INSPECT FORMWORK FOR SHAPE, LOCATION AND DIMENSIONS OF THE CONCRETE MEMBER BEING FORMED.	–	X	ACI 318: 26.11.1.2(b)	–

FOR SI: 1 INCH = 25.4 MM
(a) WHERE APPLICABLE, SEE ALSO SECTION 1705.12, SPECIAL INSPECTIONS FOR SEISMIC RESISTANCE.
(b) SPECIFIC REQUIREMENTS FOR SPECIAL INSPECTION SHALL BE INCLUDED IN THE RESEARCH REPORT FOR THE ANCHOR ISSUED BY AN APPROVED SOURCE IN ACCORDANCE WITH 17.8.2 IN ACI 318, OR OTHER QUALIFICATION PROCEDURES. WHERE SPECIFIC REQUIREMENTS ARE NOT PROVIDED, SPECIAL INSPECTION REQUIREMENTS SHALL BE SPECIFIED BY THE REGISTERED DESIGN PROFESSIONAL AND SHALL BE APPROVED BY THE BUILDING OFFICIAL PRIOR TO THE COMMENCEMENT OF THE WORK.

TABLE 1705.6
REQUIRED SPECIAL INSPECTIONS AND TESTS OF SOILS

APPLIES	TYPE	CONTINUOUS SPECIAL INSPECTION	PERIODIC SPECIAL INSPECTION
X	1. VERIFY MATERIALS BELOW SHALLOW FOUNDATIONS ARE ADEQUATE TO ACHIEVE THE DESIGN BEARING CAPACITY.	–	X
X	2. VERIFY EXCAVATIONS ARE EXTENDED TO PROPER DEPTH AND HAVE REACHED PROPER MATERIAL.	–	X
X	3. PERFORM CLASSIFICATION AND TESTING OF COMPACTED FILL MATERIALS.	–	X
X	4. VERIFY USE OF PROPER MATERIALS, DENSITIES AND LIFT THICKNESSES DURING PLACEMENT AND COMPACTION OF COMPACTED FILL.	X	–
X	5. PRIOR TO PLACEMENT OF COMPACTED FILL, INSPECT SUB-GRADE AND VERIFY THAT SITE HAS BEEN PREPARED PROPERLY.	–	X

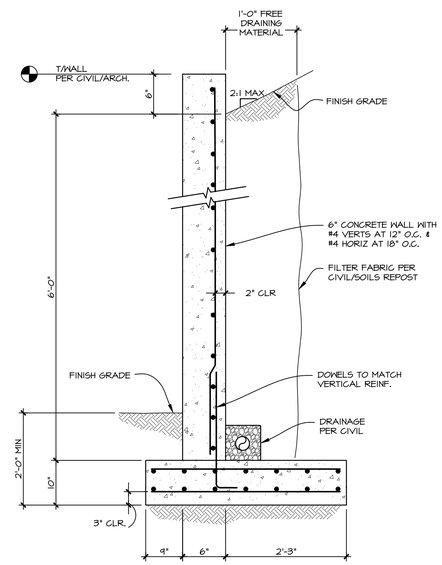

01 RETAINING WALL
SCALE: N.T.S.

TD&H Engineering
tdhengineering.com
GREAT FALLS-BOZEMAN-KALISPELL MONTANA
SPOKANE WASHINGTON
LEWISTON IDAHO

SITE NUMBER:	12281
BASE MDL:	SMART 55 - SQUARE 2017
ASSET TYPE:	FRANCHISEE
CLASSIFICATION:	NEW
OWNER:	WENSPOK
BASE VERSION:	2017
UPGRADE CLASSIFICATION:	NEW BUILD
PROJECT YEAR:	2020
FURNITURE PACKAGE:	2016 V3
DRAWING RELEASE	JANUARY 2020

Russell C. Page ARCHITECTS
204 N. Division Street, Suite 'E'
Spokane, WA 99202
(509)467-9748 Fx:(509)467-9817

PROJECT TYPE: NEW
SMART 55 SQE

Wendy's
HIGHWAY 95
PONDERAY, ID 83852

REV.	DATE	DESCRIPTION

ISSUE DATE: 8-10-2020
PROJECT NUMBER: 20-113
DRAWN BY: GXG
CHECKED BY: LWF

SEAL
PROFESSIONAL ENGINEER LICENSED 14337 STATE OF IDAHO LEE FRENCH
8/10/20

SHEET NAME
STATEMENT OF SPECIAL INSPECTIONS

SHEET NUMBER
S0.2

8/10/2020, 11:59 AM, C:\AUTODESK TEMP\AcPublish_4981\250_SMART 55_SQUARE_50_1_Structural Notes and Sections.dwg, GXG

ATTENTION ALL BIDDERS
REFER TO WENDY'S APPROVED SUPPLIERS LIST TO OBTAIN NATIONAL ACCOUNT PHONE NUMBERS AND CONTACTS.

TD&H Engineering
tdhengineering.com
GREAT FALLS-BOZEMAN-KALISPELL MONTANA
SPOKANE WASHINGTON
LEWISTON IDAHO

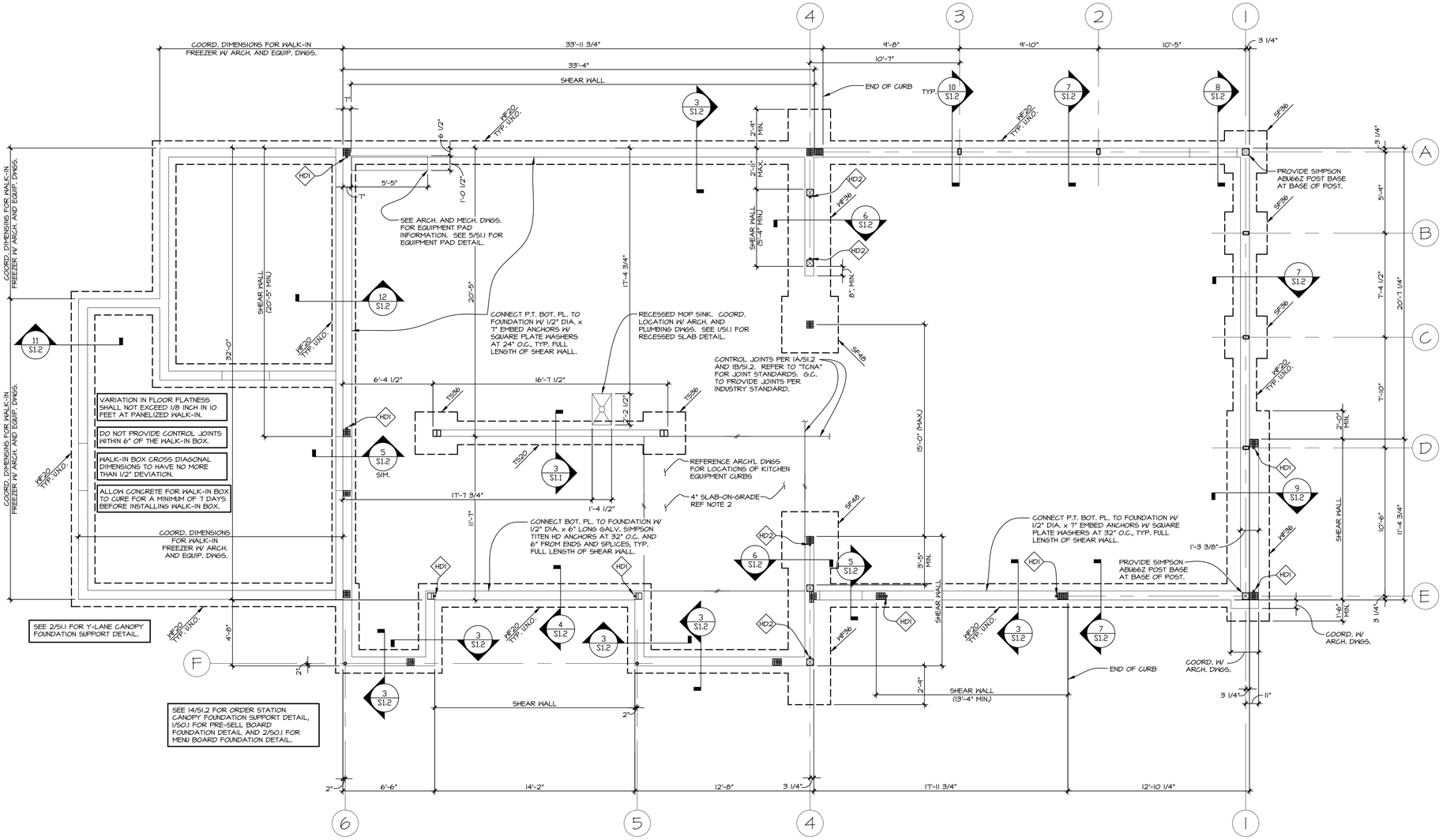

A FOUNDATION PLAN
SCALE: 1/4" = 1'-0"

FOUNDATION PLAN NOTES

1. COORDINATE ALL DIMENSIONS WITH ARCHITECTURAL DRAWINGS. SEE ARCHITECTURAL DRAWINGS FOR DIMENSIONS NOT SHOWN.
2. SLAB CONSTRUCTION: 4" THICK CONCRETE SLAB-ON-GRADE REINFORCED WITH 6x6-W1.4/W1.4 W.W.F. AT MID-DEPTH OVER COMPACTED AGGREGATE SUB-BASE PER THE GEOTECHNICAL REPORT. SEE ARCHITECTURAL DRAWINGS FOR MINOR DEPRESSIONS AND SLOPES TO DRAINS. MAINTAIN A MINIMUM 4" SLAB THICKNESS THROUGHOUT.
3. PROVIDE CONTROL JOINTS AND/OR CONSTRUCTION JOINTS IN INTERIOR CONCRETE SLABS-ON-GRADE PER DETAILS 1A/S1.2 OR 1B/S1.2 AT EVEN INTERVALS NOT EXCEEDING 12'-0" ON CENTER, EACH WAY.
4. TOP OF SLAB ELEVATION (T/SLAB) = 100'-0", TYPICAL UNLESS NOTED OTHERWISE.
5. TOP OF FOOTING ELEVATION (T/FTG.) = 97'-4" TYPICAL, UNLESS NOTED OTHERWISE.
6. UNLESS DIMENSIONED OTHERWISE, CENTER ALL WALL FOOTINGS UNDER FOUNDATION WALLS AND CENTER ALL COLUMN FOOTINGS UNDER COLUMNS.
7. PLAN DIMENSIONS AT EXTERIOR WALLS ARE TO OUTSIDE FACE OF FOUNDATION WALL.
8. STOP CONCRETE FOUNDATION WALLS 8" BELOW TOP OF SLAB ELEVATION AT DOORS IN EXTERIOR WALLS PER 5/S1.2. SEE ARCHITECTURAL DRAWINGS FOR DOOR LOCATIONS.
9. SEE SHEETS S2.1 FOR COLUMN SIZES.
10. PROVIDE STEP IN FOUNDATION ELEVATION PER 2/S1.2 WHERE INDICATED ON PLAN AND/OR WHERE FOOTINGS ARE REQUIRED TO STEP: (►-).
11. SEE SHEET S0.1 FOR STRUCTURAL NOTES.
12. OVER-EXCAVATE BELOW FOOTINGS AND BACKFILL WITH COMPACTED STRUCTURAL FILL PER GEOTECHNICAL REPORT

FOOTING SCHEDULE

MARK	SIZE	REINFORCING
WF20	20" WIDE x 12" DEEP	(2) #4 CONT. U.N.O.
WF36	36" WIDE x 12" DEEP	(4) #4 LONGITUDINAL BARS WITH #4 TRANSVERS BARS AT 12" O.C.
TS20	20" WIDE x 12" DEEP THICKENED SLAB	(2) #4 CONT.
TS36	36" SQUARE x 12" DEEP THICKENED SLAB	(4) #5 EA. WAY
SF48	48" SQUARE x 12" DEEP	(5) #5 EA. WAY
SF36	36" SQUARE x 12" DEEP	(4) #5 EA. WAY

HOLDOWN SCHEDULE

MARK	TYPE	STUD BOLTS/ SCREWS	ANCHOR ROD
HD1	SIMPSON STHD10	(18) 16d NAILS	
HD2	SIMPSON HDU4-SDS2.5	(10) 1/4"x2-1/2" SDS SCREWS	5/8" DIA. x 12" EMBED

1. SEE SECTION 13/S1.2 FOR TYPICAL HOLDOWN DETAIL, U.N.O.

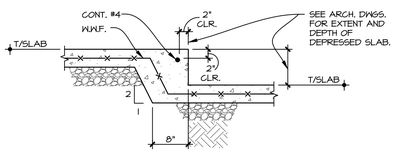

01 SECTION
SCALE: 3/4" = 1'-0"

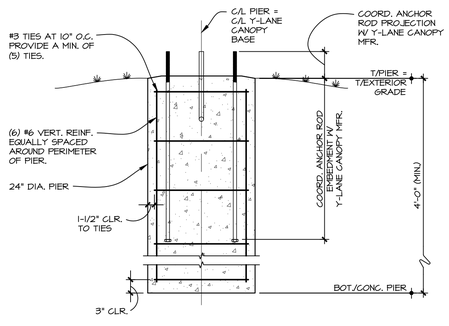

02 Y-LANE CANOPY FOUNDATION DETAIL
SCALE: N.T.S.

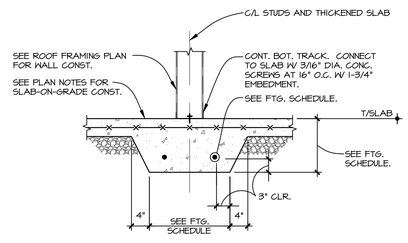

03 SECTION
SCALE: 3/4" = 1'-0"

NOT USED

04 SECTION
SCALE: 1/2" = 1'-0"
OFFSET HOLDNON DETAIL

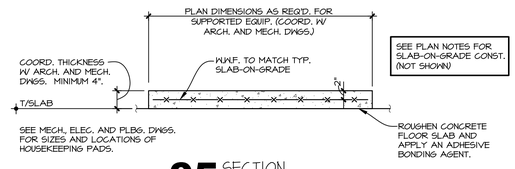

05 SECTION
SCALE: 3/4" = 1'-0"
TYPICAL EQUIPMENT PAD

SITE NUMBER:	12281
BASE MDL:	SMART 55 - SQUARE 2017
ASSET TYPE:	FRANCHISEE
CLASSIFICATION:	NEW
OWNER:	WENSPOK
BASE VERSION:	2017
UPGRADE CLASSIFICATION:	NEW BUILD
PROJECT YEAR:	2020
FURNITURE PACKAGE:	2016 V3
DRAWING RELEASE	JANUARY 2020

Russell C. Page ARCHITECTS
204 N. Division Street, Suite 'E'
Spokane, WA 99202
(509) 467-9748 Fx: (509) 467-9817

PROJECT TYPE: NEW SMART 55 SQE

Wendy's
HIGHWAY 95
PONDERAY, ID 83852

REV.	DATE	DESCRIPTION

ISSUE DATE: 8-10-2020
PROJECT NUMBER: 20-113
DRAWN BY: GXG
CHECKED BY: LWF

SEAL
PROFESSIONAL ENGINEER LICENSED 14337 STATE OF IDAHO LEE FRENCH
8/10/20

SHEET NAME
FOUNDATION PLAN AND SECTIONS

SHEET NUMBER
S1.1

8/10/2020, 11:59 AM, C:\AUTODESK TEMP\AcPublish_49812\50_SMART 55_SQUARE_S1_1_Foundation Plan and Sections.dwg, GXG

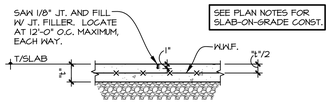

01A SECTION
SCALE: 3/4" = 1'-0"
TYPICAL CONTROL JOINT

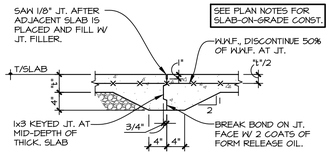

01B SECTION
SCALE: 3/4" = 1'-0"
TYPICAL CONSTRUCTION JOINT

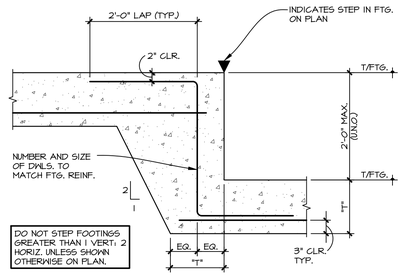

02 SECTION
SCALE: N.T.S.
TYPICAL FOOTING STEP

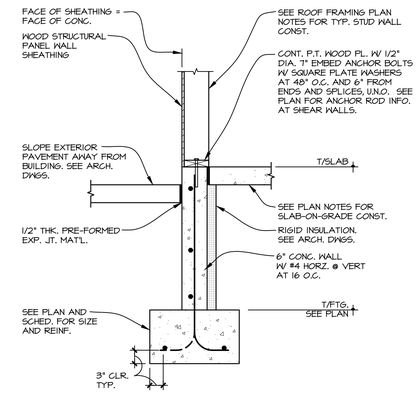

03 SECTION
SCALE: 3/4" = 1'-0"

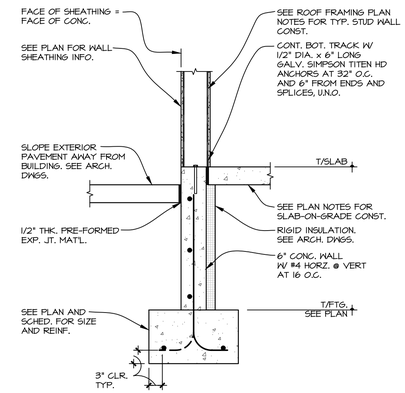

04 SECTION
SCALE: 3/4" = 1'-0"

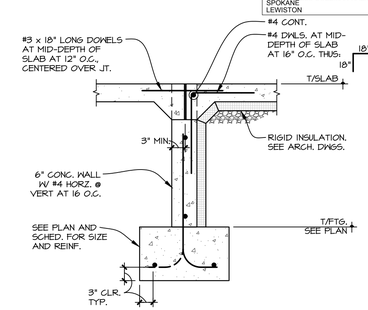

05 SECTION
SCALE: 3/4" = 1'-0"

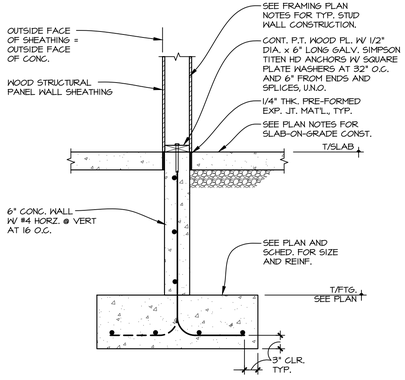

06 SECTION
SCALE: 3/4" = 1'-0"

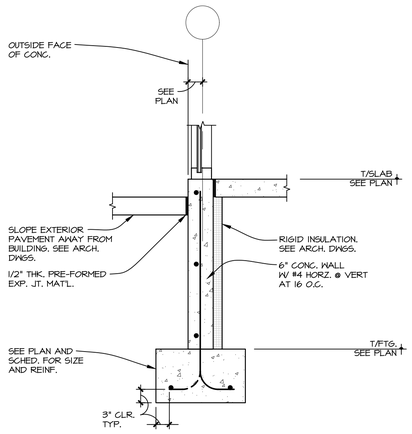

07 SECTION
SCALE: 3/4" = 1'-0"

NOT USED

08 SECTION
SCALE: 3/4" = 1'-0"

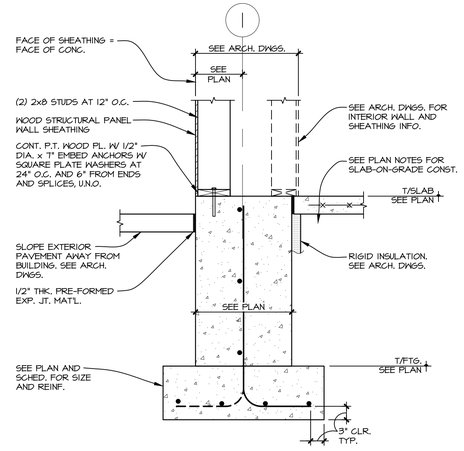

09 SECTION
SCALE: 3/4" = 1'-0"

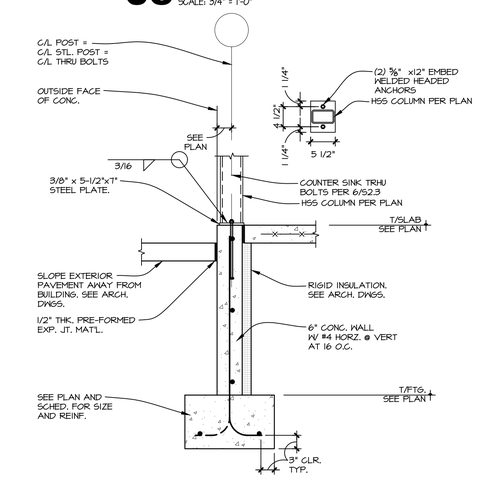

10 SECTION
SCALE: 3/4" = 1'-0"

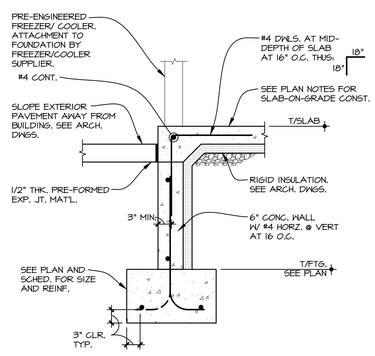

11 SECTION
SCALE: 3/4" = 1'-0"

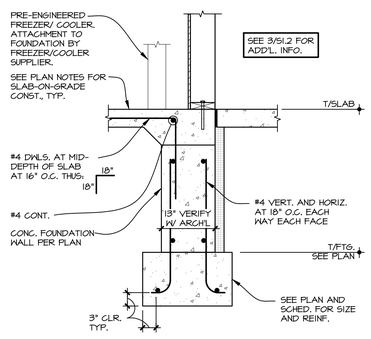

12 SECTION
SCALE: 3/4" = 1'-0"

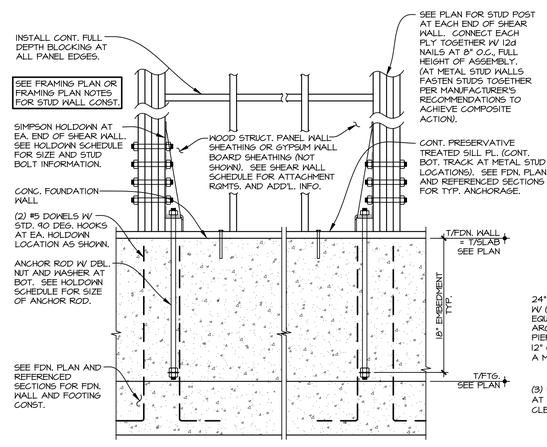

13 SECTION
SCALE: 3/4" = 1'-0"
TYPICAL SHEAR WALL DETAIL

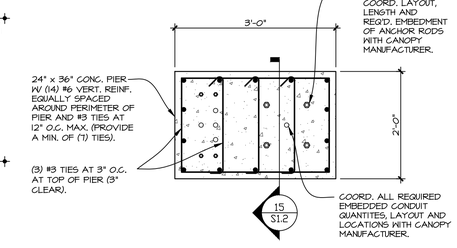

14 ORDER STATION CANOPY FOUNDATION PLAN
SCALE: N.T.S.

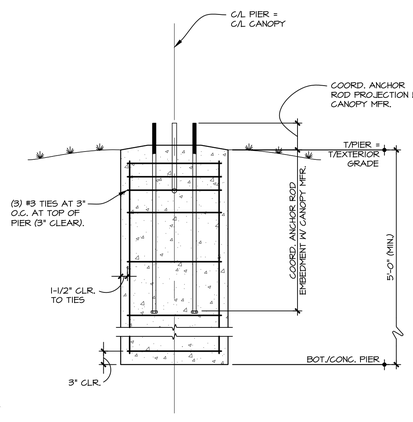

15 ORDER STATION CANOPY FOUNDATION SECTION
SCALE: N.T.S.

TD&H Engineering
tdhengineering.com
GREAT FALLS-BOZEMAN-KALISPELL MONTANA
SPOKANE WASHINGTON
LEWISTON IDAHO

SITE NUMBER:	12281
BASE MDL:	SMART 55 - SQUARE 2017
ASSET TYPE:	FRANCHISEE
CLASSIFICATION:	NEW
OWNER:	WENSPOK
BASE VERSION:	2017
UPGRADE CLASSIFICATION:	NEW BUILD
PROJECT YEAR:	2020
FURNITURE PACKAGE:	2016 V3
DRAWING RELEASE	JANUARY 2020

Russell C. Page ARCHITECTS
204 N. Division Street, Suite 'E'
Spokane, WA 99202
(509) 467-9748 Fx: (509) 467-9817

PROJECT TYPE: NEW SMART 55 SQE

Wendy's®
HIGHWAY 95
PONDERAY, ID 83852

REV.	DATE	DESCRIPTION

ISSUE DATE: 8-10-2020
PROJECT NUMBER: 20-113
DRAWN BY: GXG
CHECKED BY: LWF

SEAL
PROFESSIONAL ENGINEER LICENSED 14337 STATE OF IDAHO LEE FRENCH
8/10/20

SHEET NAME
FOUNDATION SECTIONS

SHEET NUMBER
S1.2

8/10/2020, 11:59 AM, C:\AUTODESK TEMP-AcPublish_4981250\SMART 55_SQUARE_S1_2_Foundation Sections.dwg, GXG

COLUMN SCHEDULE

MARK	CONSTRUCTION	COMMENTS
C1	(1) 2x6 JACK STUD (2) 2x6 FULL HEIGHT KING STUDS	
C2	(1) 2x6 JACK STUD (3) 2x6 FULL HEIGHT KING STUDS	
C3	(1) 2x6 JACK STUD (4) 2x6 FULL HEIGHT KING STUDS	
C4	NOT USED	
C5	(2) 2x6 JACK STUD (2) 2x6 FULL HEIGHT KING STUD	
C6	(2) 2x6 JACK STUD (3) 2x6 FULL HEIGHT KING STUD	
C7	(4) 2x6 FULL HEIGHT KING STUDS	
C8	(4) 2x6 JACK STUDS	
C9	(4) 1-3/4" x 5-1/2" LVL JACK STUDS	TOP OF COL. 117'-5 1/2"
C10	(3) 1-3/4" x 5-1/2" LVL JACK STUDS	TOP OF COL. 117'-5 1/2"
C11	HSS5x3x1/4" W/ 1-3/4"x5-1/2" LVL EA SIDE	TOP OF COL. 117'-5 1/2" REF 6/S2.3
C12	6 x 6 FULL HEIGHT	TOP OF COL. 117'-5 1/2"
C12A	6 x 6	TOP OF COL. 114'-5 1/8"
C13	(4) 2x8 FULL HEIGHT KING STUDS	
C14	HSS3x.152 STL. PIPE	SEE 1/S2.1 FOR CAP PL. AND 2/S2.1 FOR BASE PL.
C15	(4) 550S162-54 FULL HEIGHT KING STUDS	CONNECT ALL PIECES OF STUD POST TOGETHER PER MANUFACTURER'S STANDARD DETAILS TO ACHIEVE COMPOSITE ACTION.
C16	(4) 600S162-43 JACK STUDS	CONNECT ALL PIECES OF STUD POST TOGETHER PER MANUFACTURER'S STANDARD DETAILS TO ACHIEVE COMPOSITE ACTION.
C17	6 x 6 FULL HEIGHT (OR 5-1/4" x 5-1/4" PSL)	DOUGLAS-FIR (SOUTH) #1 GRADE OR BETTER

SHEAR WALL SCHEDULE

MARK	SHEATHING APPLICATION	SHEATHING TYPE AND THICKNESS	NAIL/SCREW SIZE	NAIL/SCREW SPACING EDGES	NAIL/SCREW SPACING FIELD	DESIGN CAPACITY WIND (SEISMIC)
SW1	ONE SIDE	15/32" APA RATED SHEATHING	10d	6"	12"	400 (285) PLF
SW2	BOTH SIDES	15/32" APA RATED SHEATHING	10d	4"	12"	1188 (846) PLF

1. WHERE SHEATHING OCCURS ON ONE SIDE ONLY, APPLY SHEATHING TO FACE OF WALL BY SYMBOL.
2. PROVIDE SOLID FULL-DEPTH BLOCKING AT ALL PANEL EDGES IN SHEAR WALLS.
3. LOCATE ALL PANEL EDGES ON STUDS, FULL-DEPTH BLOCKING OR TOP/BOTTOM PLATES.
4. PROVIDE HOLDOWNS AND MULTIPLE STUDS AT ENDS OF SHEAR WALLS PER SECTION 13/S1.2.

JOIST SUPPLIERS PLEASE NOTE:

THE JOIST LAYOUT SHOWN IS GENERIC IN NATURE AND IS BASED ON USING STRUCTURAL COMPOSITE JOISTS AT 32" O.C. FOR EACH STORE. THE ACTUAL JOIST DESIGN AND SHOP DRAWINGS ARE THE RESPONSIBILITY OF THE JOIST SUPPLIER. SHOP DRAWINGS WILL SHOW JOIST TYPES, LENGTHS, LOCATIONS, DETAILS, BEARING CONDITIONS, BRACING LOCATIONS AND DETAILS, ERECTIONS DETAILS AND LOADING CONDITIONS FOR THE DESIGN. NOTIFY THE ARCHITECT OR ENGINEER WHERE LOAD CONDITIONS ARE THOUGHT TO VARY FROM THOSE SHOWN HERE. SEALED SHOP DRAWINGS AND SEALED CALCULATIONS WILL BE PROVIDED BY THE JOIST SUPPLIER WHEN REQUIRED BY THE AUTHORITY HAVING JURISDICTION.

ATTENTION ALL BIDDERS
REFER TO WENDY'S APPROVED SUPPLIERS LIST TO OBTAIN NATIONAL ACCOUNT PHONE NUMBERS AND CONTACTS.

SNOW DRIFT SCHEDULE

MARK	SNOW DRIFT
1	45 PSF 10'-6"

REDBUILT

BIDDING PROCEDURE

FOR COMPLETE INFORMATION AND PRICING ON THE ROOF TRUSSES AS SPECIFIED, CONTACT THE REDBUILT SERVICE CENTER AT 1-877-371-0445. ANY CHANGES OR VARIATIONS FROM THE NATIONAL ACCOUNT DESIGN SHOULD BE BROUGHT TO THE ATTENTION OF THE WENDY'S ACCOUNT COORDINATOR AT THE TIME OF BIDDING.

ORDERING PROCEDURE

TO PLACE YOUR ORDER, CALL THE ACCOUNT SERVICE CENTER AT THE ABOVE NUMBER. DRAWINGS AND/OR CALCULATIONS SHALL BE SUPPLIED FOR APPROVAL AS REQUIRED BY THE NATIONAL ACCOUNT AGREEMENT. INSTALLATION INSTRUCTIONS AND DRAWINGS WILL BE PROVIDED TO THE CONTRACTOR BY REDBUILT. THE CONTRACTOR WILL BE RESPONSIBLE FOR THE DELIVERY COORDINATION, UNLOADING AND INSTALLATION OF THE MATERIAL IN THIS PACKAGE.

NORMAL DELIVERY TIME IS 2-3 WEEKS AFTER APPROVAL OF THE SHOP DRAWINGS.

TD&H Engineering
tdhengineering.com
GREAT FALLS-BOZEMAN-KALISPELL MONTANA
SPOKANE WASHINGTON
LEWISTON IDAHO

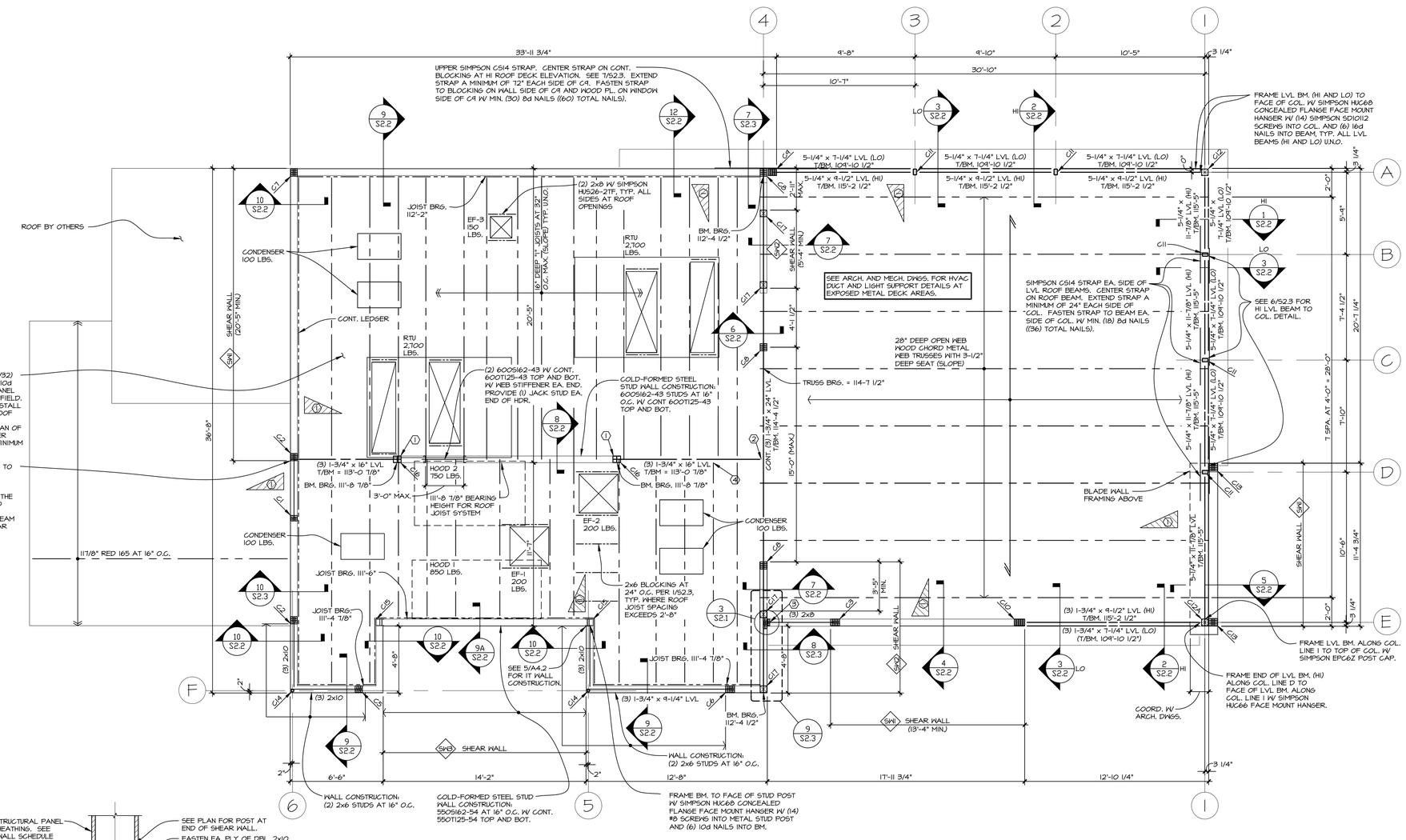

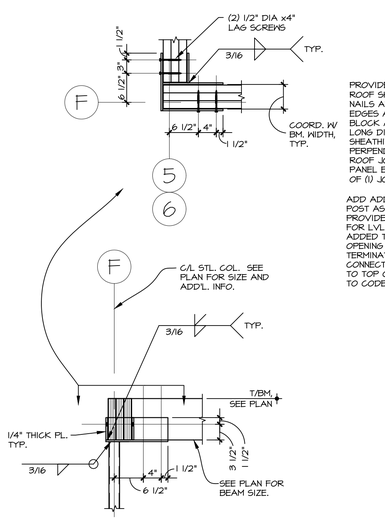

01 SECTION
SCALE: 3/4" = 1'-0"

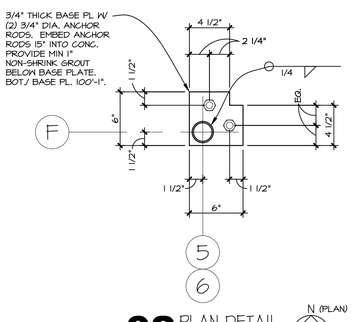

02 PLAN DETAIL
SCALE: 1-1/2" = 1'-0"

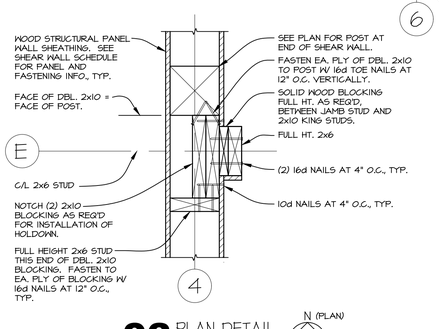

03 PLAN DETAIL
SCALE: 1-1/2" = 1'-0"

A ROOF FRAMING PLAN
SCALE: 1/4" = 1'-0"

ROOF FRAMING PLAN NOTES

1. COORDINATE ALL DIMENSIONS WITH ARCHITECTURAL DRAWINGS. SEE ARCHITECTURAL DRAWINGS FOR DIMENSIONS NOT SHOWN.
2. ALL DIMENSIONS TO WALLS ARE TO OUTSIDE FACE OF SHEATHING.
3. SEE 1/S2.3 FOR TYPICAL ROOF JOIST BLOCKING DETAILS.
4. SEE 2/S2.3 FOR TOP OF INTERIOR NON-LOAD BEARING WALL BRACING DETAIL.
5. SEE 3/S2.3 FOR TYPICAL SOFFIT/BULKHEAD DETAIL.
6. SEE 4/S2.3 FOR WATER HEATER PLATFORM FRAMING DETAIL.
7. SEE 5/S2.3 FOR SATELLITE DISH MOUNTING DETAIL.
8. TYPICAL EXTERIOR STUD WALL CONSTRUCTION: 2x6 DF #2 GRADE STUDS AT 16" O.C. W/ CONT. P.T. 2x6 BOT. PL. AND DBL. 2x6 TOP PL., TYPICAL UNLESS NOTED OTHERWISE.
9. DESIGN CONNECTION OF EACH ROOF TRUSS TO SUPPORTING BEAMS FOR 900 LB. NET SERVICE WIND UPLIFT REACTION.
10. ⟷ – INDICATES SPAN DIRECTION OF 22 GAGE 1.5 VL GALVANIZED (ASTM A653, G90) COMPOSITE STEEL FLOOR DECKING BY VULCRAFT. FASTEN TO SUPPORTING STRUCTURE AS FOLLOWS: SUPPORT FASTENERS: SIMPSON SDS25112 SCREWS AT 36/4 PATTERN SIDELAP FASTENERS: (3) #10 TEK SCREWS PER SPAN, EQUALLY SPACED BETWEEN SUPPORT FASTENERS. PROVIDE GALVANIZED DECK WITH HIGH-GLOSS, BRIGHT SHEEN. SUBMIT SAMPLE TO REGIONAL MANAGER OF DESIGN AT WENDY'S FOR APPROVAL.
11. SEE SHEET S0.1 FOR STRUCTURAL NOTES.

ROOF FRAMING PLAN CODED NOTES : (#)

(1) CONNECT BOTTOM OF TRIPLE LVL BEAM TO TOP OF POST WITH SIMPSON MSTA30 STRAP EACH SIDE. CENTER LENGTH OF STRAP ON BOTTOM OF LVL BEAM AND FASTEN TO LVL WITH (11)10d NAILS AND TO POST W/ (11) #10 SCREWS. PROVIDE 3/4"x6"x30" WOOD STRUCTURAL PANEL SHIM ONE SIDE OF BEAM FOR FLUSH CONNECTION OF STRAP.

(2) FRAME END OF LVL TO FACE OF LVL WITH SIMPSON MGU5.50-SDS FACE MOUNT HANGER. HANGER DEPTH TO BE A MIN. OF 16".

(3) FRAME END OF HEADER TO FACE OF JAMB STUD WITH SIMPSON HUC68 CONCEALED FLANGE FACE MOUNT HANGER.

(4) FRAME ENDS OF I-JOISTS TO FACE OF LVL BEAM WITH SIMPSON HANGERS (BY JOIST SUPPLIER), TYP.

SITE NUMBER:	12281
BASE MDL:	SMART 55 - SQUARE 2017
ASSET TYPE:	FRANCHISEE
CLASSIFICATION:	NEW
OWNER:	WENSPOK
BASE VERSION:	2017
UPGRADE CLASSIFICATION:	NEW BUILD
PROJECT YEAR:	2020
FURNITURE PACKAGE:	2016 V3
DRAWING RELEASE	JANUARY 2020

Russell C. Page ARCHITECTS
204 N. Division Street, Suite 'E'
Spokane, WA 99202
(509) 467-9748 Fx: (509) 467-9817

PROJECT TYPE: NEW
SMART 55 SQE

Wendy's.
HIGHWAY 95
PONDERAY, ID 83852

REV.	DATE	DESCRIPTION

ISSUE DATE: 8-10-2020
PROJECT NUMBER: 20-113
DRAWN BY: GXG
CHECKED BY: LWF

SEAL
PROFESSIONAL ENGINEER LICENSED 14337 STATE OF IDAHO LEE FRENCH
8/10/20

SHEET NAME
ROOF FRAMING PLAN AND SECTIONS (CARRIER/TRANE)

SHEET NUMBER
S2.1

8/10/2020, 11:59 AM, C:\AUTODESK TEMP\Acpublish_4981\50_SMART 55_SQUARE_S2_1_Roof Framing Plan and Sections.dwg, GXG

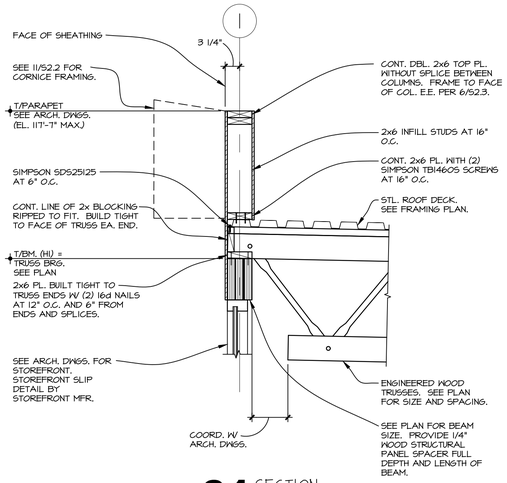

01 SECTION
SCALE: 3/4" = 1'-0"

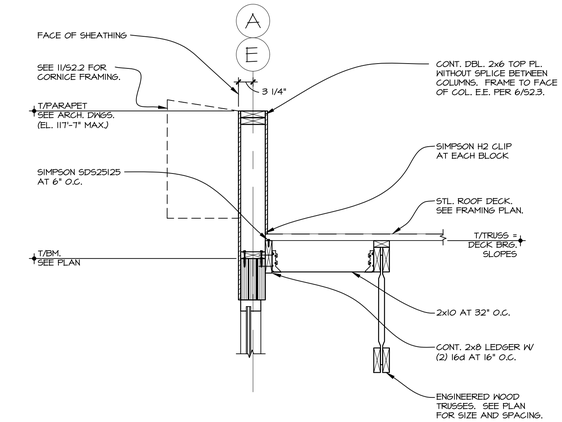

02 SECTION
SCALE: 3/4" = 1'-0"

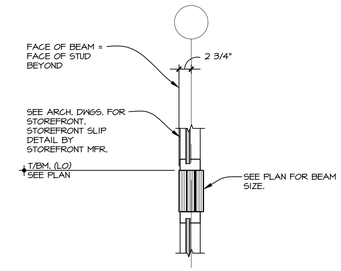

03 SECTION
SCALE: 3/4" = 1'-0"

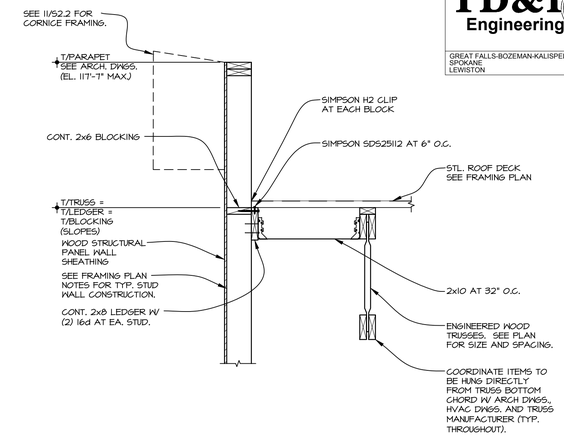

04 SECTION
SCALE: 3/4" = 1'-0"

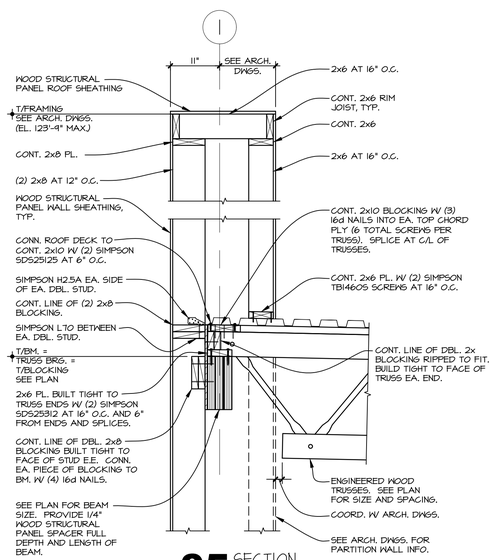

05 SECTION
SCALE: 3/4" = 1'-0"

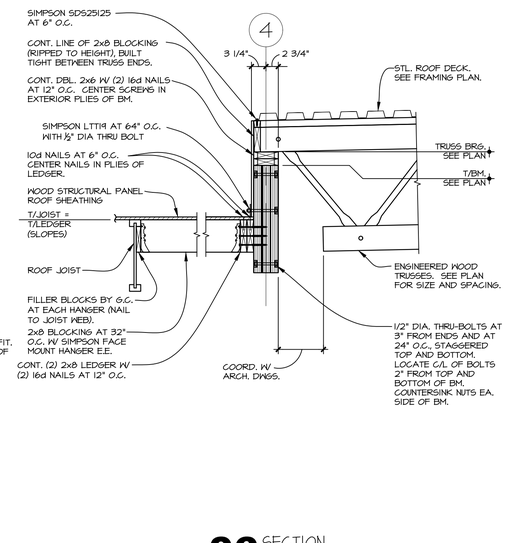

06 SECTION
SCALE: 3/4" = 1'-0"

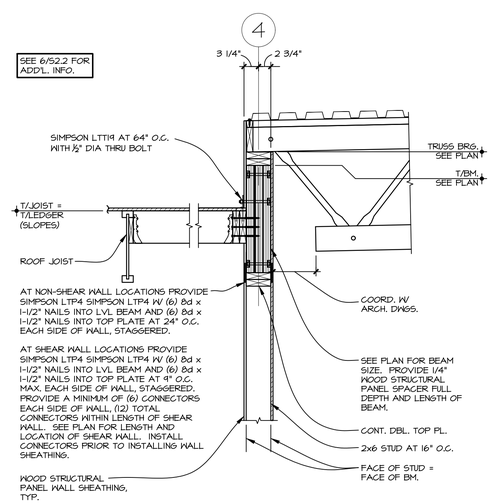

07 SECTION
SCALE: 3/4" = 1'-0"

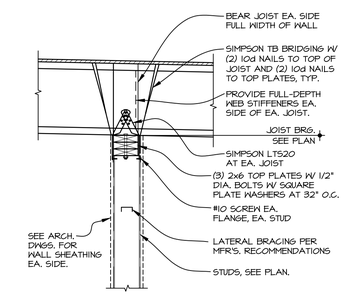

08 SECTION
SCALE: 3/4" = 1'-0"

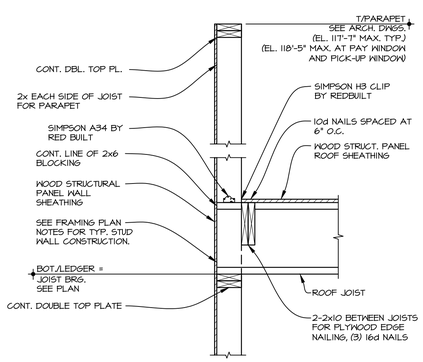

09 SECTION
SCALE: 3/4" = 1'-0"

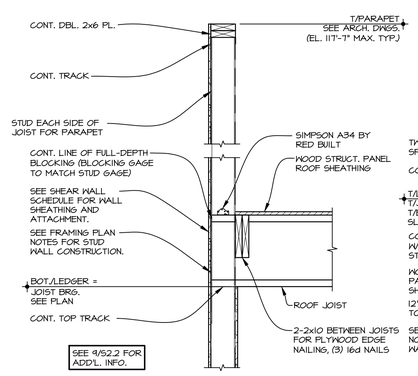

09A SECTION
SCALE: 3/4" = 1'-0"

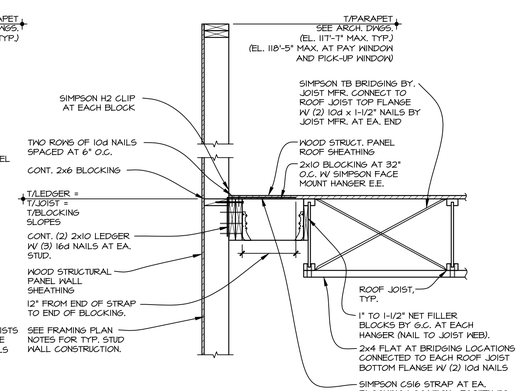

10 SECTION
SCALE: 3/4" = 1'-0"

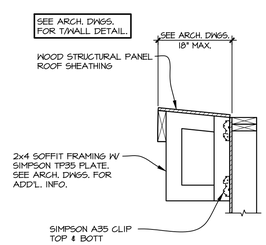

11 SECTION
SCALE: 3/4" = 1'-0"

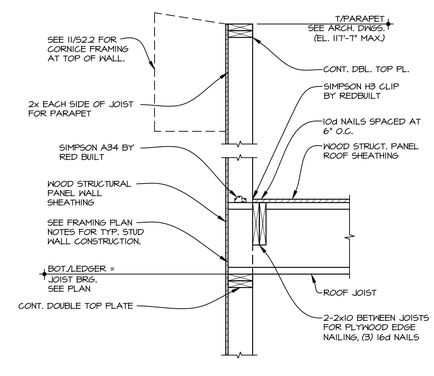

12 SECTION
SCALE: 3/4" = 1'-0"

TD&H Engineering
tdhengineering.com
GREAT FALLS-BOZEMAN-KALISPELL MONTANA
SPOKANE WASHINGTON
LEWISTON IDAHO

SITE NUMBER:	12281
BASE MDL:	SMART 55 - SQUARE 2017
ASSET TYPE:	FRANCHISEE
CLASSIFICATION:	NEW
OWNER:	WENSPOK
BASE VERSION:	2017
UPGRADE CLASSIFICATION:	NEW BUILD
PROJECT YEAR:	2020
FURNITURE PACKAGE:	2016 V3
DRAWING RELEASE	JANUARY 2020

Russell C. Page ARCHITECTS
204 N. Division Street, Suite 'E'
Spokane, WA 99202
(509) 467-9748 Fx: (509) 467-9817

PROJECT TYPE: NEW
SMART 55 SQE

Wendy's.
HIGHWAY 95
PONDERAY, ID 83852

REV.	DATE	DESCRIPTION

ISSUE DATE: 8-10-2020
PROJECT NUMBER: 20-113
DRAWN BY: GXG
CHECKED BY: LWF

SEAL
PROFESSIONAL ENGINEER LICENSED 14337 STATE OF IDAHO LEE FRENCH
8/10/20

SHEET NAME
FRAMING SECTIONS

SHEET NUMBER
S2.2

8/10/2020, 11:59 AM, C:\AUTODESK TEMP\AcPublish_4868:250_SMART 55_SQUARE_S2_2_Framing Sections.dwg, GXG

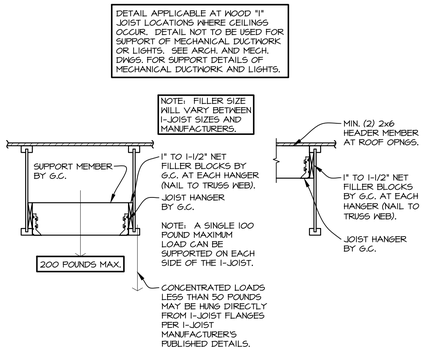

01 SECTION
SCALE: 3/4" = 1'-0"
LOAD AND HEADER DETAILS

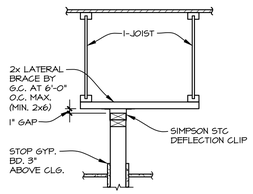

02 SECTION
SCALE: 3/4" = 1'-0"
NON-LOAD BEARING WALL BRACING

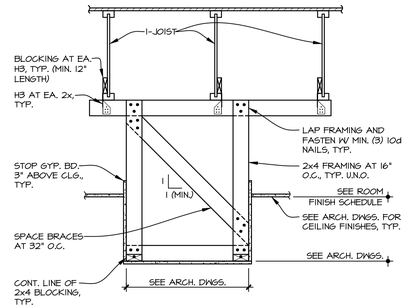

03 SECTION
SCALE: 3/4" = 1'-0"
TYPICAL SOFFIT/BULKHEAD FRAMING

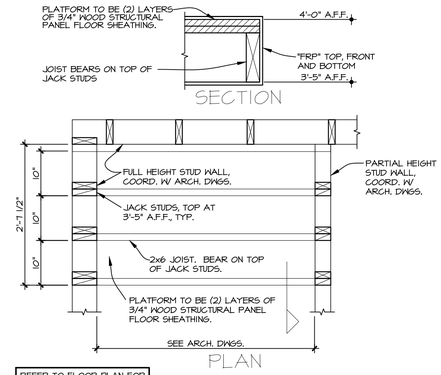

04 SECTION
SCALE: 3/4" = 1'-0"
WATER HEATER PLATFORM FRAMING

NOT USED

05 SECTION
SCALE: 3/4" = 1'-0"
SATELLITE DISH MOUNT

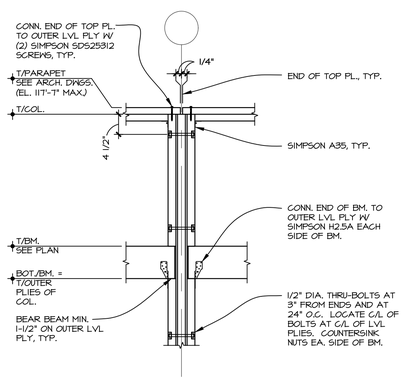

06 SECTION
SCALE: 3/4" = 1'-0"

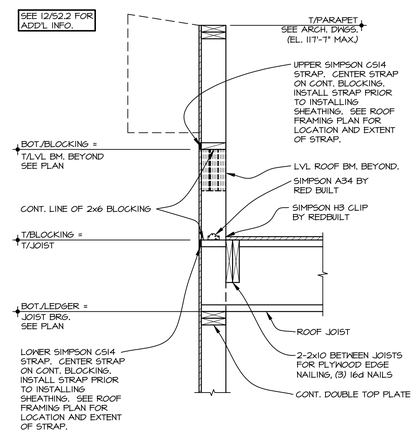

07 SECTION
SCALE: 3/4" = 1'-0"

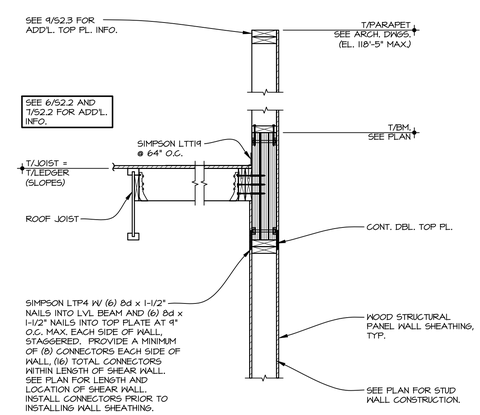

08 SECTION
SCALE: 3/4" = 1'-0"

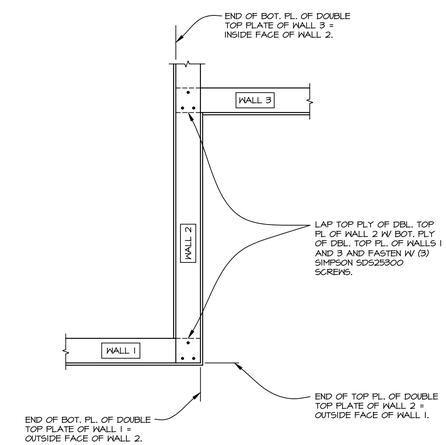

09 WALL TOP PLATE PLAN DETAIL
SCALE: 3/4" = 1'-0"
N (PLAN)

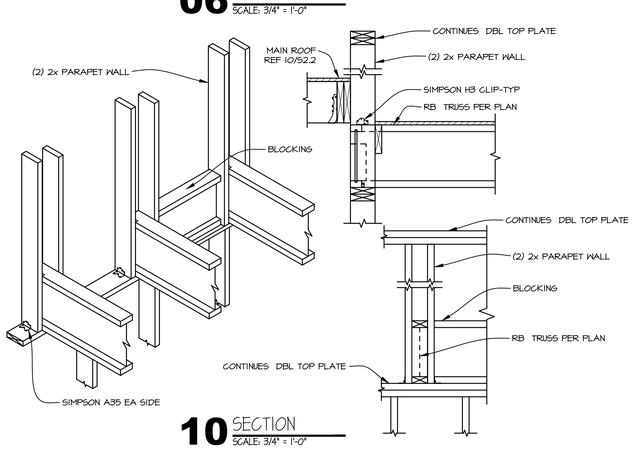

10 SECTION
SCALE: 3/4" = 1'-0"

8/10/2020, 11:59 AM, C:\AUTODESK TEMP\AcPublish_46812\50_SQUARE_S2_3_Framing Sections.dwg, GXG

TD&H Engineering
tdhengineering.com
GREAT FALLS-BOZEMAN-KALISPELL MONTANA
SPOKANE WASHINGTON
LEWISTON IDAHO

SITE NUMBER:	12281
BASE MDL:	SMART 55 - SQUARE 2017
ASSET TYPE:	FRANCHISEE
CLASSIFICATION:	NEW
OWNER:	WENSPOK
BASE VERSION:	2017
UPGRADE CLASSIFICATION:	NEW BUILD
PROJECT YEAR:	2020
FURNITURE PACKAGE:	2016 V3
DRAWING RELEASE	JANUARY 2020

Russell C. Page ARCHITECTS
204 N. Division Street, Suite 'E'
Spokane, WA 99202
(509) 467-9748 Fx: (509) 467-9817

PROJECT TYPE: NEW
SMART 55 SQE

Wendy's®
HIGHWAY 95
PONDERAY, ID 83852

REV.	DATE	DESCRIPTION

ISSUE DATE: 8-10-2020
PROJECT NUMBER: 20-113
DRAWN BY: GXG
CHECKED BY: LWF

SEAL
PROFESSIONAL ENGINEER LICENSED 14332 STATE OF IDAHO LEE FRENCH
8/10/20

SHEET NAME
FRAMING SECTIONS

SHEET NUMBER
S2.3

GENERAL NOTES

A. PAY ALL FEES AND ARRANGE FOR EXECUTION OF ALL TAPS, METERS WITH REQUIRED ENCLOSURES (IF ANY), AND APPURTENANCES INHERENT TO THE INSTALLATION OF PLUMBING SERVICE.

B. PROVIDE ALL LABOR, EQUIPMENT, AND MATERIALS NECESSARY TO EXECUTE THE PLUMBING WORK INDICATED ON THE DRAWINGS AS SPECIFIED, AND AS REQUIRED BY LOCAL CODES AND ORDINANCES. PLUMBING WORK SHALL INCLUDE ALL PIPING FOR DOMESTIC HOT AND COLD WATER LINES, VENT AND SANITARY LINES, HOOK-UP OF ALL FIXTURES SCHEDULED ON THE DRAWINGS, AND INSULATION OF DESIGNATED PIPING. WORK SHALL ALSO INCLUDE ALL GAS PIPING AND EQUIPMENT CONNECTIONS WHERE REQUIRED. INCLUDE ALL ITEMS SUCH AS FITTINGS NOT MENTIONED BUT UNDERSTOOD TO BE NECESSARY TO COMPLETE THE PLUMBING SYSTEM. COORDINATE ALL WORK WITH OTHER CONTRACTORS.

C. PROVIDE FOR DRAINING WATER SYSTEM AND CAP ALL STUBS UNTIL FINISH WORK IS INSTALLED. INSTALL DRAIN VALVE AT WATER METER WITH 3/4" HOSE THREAD AND VACUUM BREAKER.

D. PROVIDE VALVES ON WATER SUPPLIES TO EACH FIXTURE & EQUIPMENT. VALVES SHALL BE 1/4 TURN SHUT-OFF VALVES.

E. INSULATE ALL PIPING PER SPECIFICATIONS.

F. PLUMBING FIXTURES SHALL BE PROVIDED WHERE SHOWN ON DRAWINGS. FIXTURE FITTINGS AND EXPOSED FIXTURE PIPING SHALL BE BRASS CHROMIUM PLATED. TRAPS SHALL BE CAST BRASS. FIXTURES SHALL BE EQUAL IN ALL RESPECTS TO FIXTURES SPECIFIED.

G. PROVIDE ROUGH-IN AND FINAL CONNECTIONS OF REQUIRED WASTE, VENT, AND WATER SUPPLY PIPING.

H. THIS CONTRACTOR SHALL GUARANTEE ALL WORK INSTALLED UNDER THE CONTRACT TO BE FREE FROM DEFECTIVE WORKMANSHIP AND MATERIALS, (USUAL WEAR IS EXPECTED), AND SHOULD DEFECTS DEVELOP WITHIN A PERIOD OF ONE YEAR AFTER ACCEPTANCE OF THE BUILDING BY THE OWNER, THIS CONTRACTOR SHALL REPAIR AND/OR REPLACE DEFECTIVE ITEMS AND ALL DAMAGE RESULTING FROM FAILURE OF THESE ITEMS, AT NO EXPENSE WHATSOEVER TO THE OWNER

I. THE DIRECTION OF THE SANITARY MAIN AND THE LOCATION OF THE GREASE INTERCEPTOR SHALL BE COORDINATED WITH CIVIL DRAWINGS PRIOR TO ROUGH-IN.

J. PROVIDE PROVENT TRAP GUARD (OR APPROVED EQUAL) AT ALL FLOOR DRAINS. PROVIDE TRAP PRIMERS ON FLOOR DRAINS ONLY IF REQUIRED BY AUTHORITY HAVING JURISDICTION (AHJ). IF AHJ REQUIRES TRAP PRIMERS, LAYOUT DISTRIBUTION TO CONNECT MULTIPLE FLOOR DRAINS TO ONE TRAP PRIMER.

K. COORDINATE LOCATION AND ROUGH-IN HEIGHT OF KITCHEN EQUIPMENT WITH OWNER AND MILLWORK PRIOR TO ROUGH-IN.

L. PROVIDE WATER HAMMER ARRESTORS AT END RUN OF ALL WATER PIPING. SIZE AND LOCATE AS RECOMMENDED BY PLUMBING AND DRAINAGE INSTITUTE STANDARD PDI-WH201, AND AS RECOMMENDED BY THE MANUFACTURER.

M. ALL PIPING (GAS AND WATER) SHALL BE CONCEALED IN WALL SPACE WHEN POSSIBLE, UNLESS NOTED OTHERWISE.

N. DAMAGES TO EXISTING WALLS, FLOORS, FINISHES ETC. BY THIS CONTRACTOR SHALL BE REPAIRED AT THIS CONTRACTOR'S EXPENSE.

O. WATER HEATER, WATER METER AND BACKFLOW PREVENTER SHALL BE INSTALLED TO MEET ALL STATE, COUNTY AND LOCAL JURISDICTION CODES.

P. ON ALL SYNFLEX LINE INSTALLATIONS (EXCEPT DRINK STATIONS AND COFFEE BREWER) TRANSITION TO COPPER AT TOP OF WALL, AND ROUTE DOWN INSIDE WALL AND THEN THROUGH WALL TO EXPOSED SHUT OFF VALVE. DRINK STATIONS WILL HAVE SYNFLEX LINES FROM FILTER TO UNIT INSTALLED BY BEVERAGE SYSTEM INSTALLER.

Q. 3 COMP SINK, COMBI OVEN AND 2 AREA FLOOR DRAINS BETWEEN HOOD AREA SHALL BE ROUTED TO GREASE WASTE LINE. ALL OTHER DRAINS SHALL BE ROUTED TO BUILDING SANITARY.

R. ALL WATER SUPPLY LINES, VENT STACK LINES, SANITARY LINES, AND OTHER EXPOSED PLUMBING LINES SHALL BE COMPLETELY SEALED AT ALL WALL PENETRATIONS. PROVIDE CHROME ESCUTCHEON PLATE SEALED TO WALL WITH SILICONE SEALANT.

S. SEE CONNECTION SCHEDULE FOR ALL INDIVIDUAL PIPE SIZES.

WATER CALCULATION

CRITICAL ELEVATIONS AND DISTANCES:	FEET
ELEVATION OF CONTROLLING FIXTURE (WATER CLOSET)	4.0
ELEVATION OF FINISHED FLOOR	0.0
ELEVATION OF WATER MAIN	-4.0
ELEVATION OF WATER ENTRY	-4.0
VERTICAL DIST. FROM WATER MAIN TO CONTROLLING FIXTURE	8.0
SYSTEM PRESSURE REQUIREMENTS:	PSI
ELEVATION (VERTICAL DISTANCE) X 0.434 PSI/FT	3.5
PRESSURE NEEDED AT CONTROLLING FIXTURE	20.0
BACKFLOW PREVENTER: 1-1/2" AT 66 GPM	8.0
WATER METER: 1-1/2" AT 66 GPM	10.0
TOTAL	41.5
PIPE RUNS:	FEET
EXTERIOR, MAIN TO BUILDING ENTRY	100.0
EXTERIOR, VERTICAL RISE	0.0
INTERIOR, ENTRY TO CONTROLLING FIXTURE	60.0
INTERIOR, VERTICAL RISE	8.0
ALLOWANCE FOR FITTINGS, ETC. (LENGTH X 0.25)	42.0
TOTAL	210.0
SYSTEM PRESSURE DATA:	PSI
STREET PRESSURE	80.0
SYSTEM PRESSURE REQUIRED	41.5
PRESSURE AVAILABLE FOR (PIPING) FRICTION LOSS	38.5
PIPE SIZING:	PSI/100'
PRESSURE AVAILABLE X 100 / (TOTAL PIPE RUN)	18.3
* NOTE: ALL PIPING IS SIZED FOR 5 PSI/100' PRESSURE LOSS	

PLUMBING FIXTURE SCHEDULE

SYMBOL	FIXTURE TYPE	MANUF.	MODEL	DESCRIPTION	ACCESSORIES/OPTIONS	NOTES (#)
WC	WATER CLOSET (ACCESSIBLE)	SLOAN	ST-2029 (2102029)	FLOOR MOUNT, WHITE VITREOUS CHINA, 1.1-1.6 GPF ELONGATED SIPHON JET BOWL, 1-1/2" TOP SPUD, & RIM HEIGHT 17" A.F.F.	TOTO #TET1LA21#CP-W 1.28 GPF ECOPOWER SENSOR WATER CLOSET FLUSH VALVE. MAINLINE #ML1055SSC00 WHITE OPEN FRONT ELONGATED TOILET SEAT LESS COVER.	(1)
LAV	LAVATORY (ACCESSIBLE)	AMERICAN STANDARD	#0356.921.020 LUCERNE	WALL HUNG, 20½"x18¼", WHITE VITREOUS CHINA.	TOTO #TEL105-D10E POLISHED CHROME, SINGLE HOLE, ECOPOWER DECK MOUNTED FAUCET WITH 0.09GPC DISCHARGE (10 SECOND CYCLE).	(1), (2), (3)
UR	URINAL (ACCESSIBLE)	SLOAN	SU-1009A	WALL HUNG URINAL, WHITE VITREOUS CHINA, .	SLOAN #SU-1009A (1101009) 0.125-0.5 GPF URINAL ADA, TOTO #TEU1UA12#CP 0.125 GPF URINAL FLUSH VALVE.	(1), (2), (4)
FPWH	FROST PROOF WALL HYDRANT	WOODFORD	MODEL 65	ANTI-SIPHON, AUTOMATIC DRAINING, WALL HYDRANT, NON-FREEZE INTEGRAL VACUUM BREAKER, ALL BRONZE INTERIOR PARTS, KEY OPERATED, 3/4" SOLDER INLET.	MOUNT 18" ABOVE FINISHED GRADE. PROVIDE APPROPRIATE MODEL FOR WALL THICKNESS AND SITE SPECIFIC TEMPERATURE REQUIREMENTS.	
FD	FLOOR DRAIN	SIOUX CHIEF / ZURN	832-35D-NR / #ZN415-B-3NH	FLOOR DRAIN WITH 5" ROUND NICKEL BRONZE ADJUSTABLE STRAINER AND CAST IRON BODY & 3" BOTTOM OUTLET.	PROVIDE WITH ASSE 1072 APPROVED TRAP SEAL DEVICE. TRAP SEAL DEVICE SHALL BE TRAP PROSET TRAPGUARD OR APPROVED EQUAL. INSTALL PER MANUFACTURER'S RECCOMENDATIONS. PROVIDE DRAINS IN CUSTOMER AREAS WITH VANDAL RESISTANT SCREWS.	
FS-1	FLOOR SINK	SIOUX CHIEF / ZURN	#861-3PN-D / #Z1900-3NH-K-4	12" SQUARE TOP FLOOR SINK W/8" DEEP PVC/CAST IRON BODY & 3" BOTTOM OUTLET (CAST IRON OPTIONAL)		
FS-2	FLOOR SINK	SIOUX CHIEF / ZURN	#861-23X-N2 / #Z1900-3NH-2NB	12" SQUARE TOP FLOOR SINK WITH 6" DEEP ACID RESISTANT ENAMEL CAST IRON BODY AND 3"OUTLET WITH ½ NICKEL BRONZE GRATE.	SET FLOOR SINK LEVEL WITH FINISH FLOOR.	
HD	HUB DRAIN	N/A	N/A	STUB 3" WASTE LINE 12" ABOVE FINISHED FLOOR SLAB FOR FUTURE CONNECTIONS BY OTHERS.	PROVIDE WITH ASSE 1072 APPROVED TRAP SEAL DEVICE. TRAP SEAL DEVICE SHALL BE TRAP PROSET TRAPGUARD OR APPROVED EQUAL. INSTALL PER MANUFACTURER'S RECCOMENDATIONS.	
MV	MIXING VALVE	SYMMONS	7-225-CK "MAXLINE"	1/2" INLETS AND OUTLET, THERMOSTATIC CONTROLLER WITH INTEGRAL CHECKS, ALL BRASS BODY WITH DUAL STAINLESS STEEL STRAINER, VANDAL RESISTANT TEMPERATURE ADJUSTMENT HANDLE.	SET TO 105°F. MOUNT IN ACCESSIBLE LOCATION.	

NOTES:

1. INSTALL IN ACCORDANCE TO ADA ACCESSIBILITY REQUIREMENTS.
2. PROVIDE WITH QUARTER TURN BRASS ANGLE COMPRESSION STOPS WITH LOOSE KEY HANDLES, STAINLESS BRAIDED SUPPLIES, CHROME SUPPLY AND DRAIN ESCUTCHEONS, CHROME GRID STRAINER DRAIN WITH TAILPIECE, CHROME PLATED CAST BODY P-TRAP WITH CLEANOUT. INSULATE WASTE AND WATER PIPING WITH TRUEBRO "LAV-GUARD2" #101-EZ.
3. FURNISH WITH ZURN #Z-1231 LAVATORY CARRIER.
4. FURNISH WITH ZURN #Z-1222 URINAL CARRIER.

GAS FIRED WATER HEATER SCHEDULE

SYMBOL	MANUF.	MODEL	GAL.	BTU	GAS PRESSURE	RECOVERY (GPH/100°F)	SET POINT (°F)	NOTES (#)
WH-1	RANNAI	TRW02SEi	0	15,200-398,000	8" W.C.	7.6 GPM@ 100° RISE	140	(1), (2)

NOTES:

1. GAS FIRED WATER HEATER: THREE YEAR TANK/PARTS WARRANTY, GLASS LINED STEEL TANK, 150 PSI WORKING PRESSURE, MEETING CURRENT EDITION OF ASHRAE 90.1B AND LOCAL ENERGY CONSERVATION REQUIREMENTS. PROVIDE T&P RELIEF VALVE.
2. FURNISH WITH EXPANSION TANK AS SPECIFIED ON PLANS.

WSFU CALCULATIONS

FIXTURE	QTY.	WSFU	TOTAL
WATER CLOSET (FLUSH)	3	10	30
LAVATORY	3	2	6
MOP BASIN	1	3	3
HAND SINK	3	0	0
2-COMP SINK	1	3	3
3-COMP SINK	1	3	3
WAREWASH	1	3	3
BEVERAGE STATION	2	1	2
ICE MAKER	3	1	3
COFFEE BREWER	1	0.5	0.5
TEA BREWER	1	0.5	0.5
HOSE BIBB	2	3	3
WSFU VALUES GIVEN PER IPC		WSFU TOTAL	57.00

DFU CALCULATIONS

FIXTURE	QTY.	DFU	TOTAL
WATER CLOSET (FLUSH)	2	4	8
LAVATORY	3	1	3
MOP BASIN	1	2	2
HAND SINK	3	1	3
3" HUB DRAIN	2	5	10
3" FLOOR SINK	5	5	25
3" FLOOR DRAIN (EMERGENCY)	13	-	-
DFU VALUES GIVEN PER IPC		DFU TOTAL	51.0

EXPANSION TANK SCHEDULE

SYMBOL	MANUF.	MODEL	GAL.	ACCEPT. GAL.	CONN. LOC.	CONN. SIZE	MOUNTING	NOTES (#)
ET-1	AMTROL	ST-8	4.4	3.2	TOP	¾"	ABOVE WH-1	(1), (2)
ET-2	AMTROL	ST-5	2	0.9	TOP	¾"	ABOVE WH-2	(1), (2)

NOTES:

1. EXPANSION TANK: STEEL SHELL, HEAVY DUTY BUTYL NSF/ANSI 61, FACTORY PRECHARGED TO 50 PSIG. MAX OPERATING TEMPERATURE 200°, MAX OPERATING PRESSURE 150 PSI, 1 YEAR MANUFACTURER'S WARRANTY. INSTALL PER MANUFACTURER'S INSTRUCTIONS.
2. FIELD CHARGE EXPANSION TANK TO SYSTEM PRESSURE BEFORE CONNECTION TO DOMESTIC WATER SYSTEM. FIELD VERIFY PRESSURE REQUIREMENTS.

GREASE INTERCEPTOR SCHEDULE

SYMBOL	MANUF.	MODEL	FLOW RATE (GPM)	GREASE CAPACITY (LBS.)	LIQUID CAPACITY (GAL.)	NOTES (#)
GI	WILBER PRECAST	1634GTT B	100	1,076	275	(1), (2), (3)

NOTES:

1. CONTRACTOR SHALL SUBMIT PROPOSED GREASE INTERCEPTOR INSTALLATION PLANS AND SPECIFICATIONS TO LOCAL AUTHORITIES FOR THEIR APPROVAL BEFORE ACQUISITION. SEE MANUFACTURER INSTALLATION MANUAL FOR ADDITIONAL INSTRUCTIONS.
2. PROVIDE WITH H20 LOAD RATED PICKABLE CAST IRON LIDS.

PUMP SCHEDULE

SYMBOL	MANUF.	MODEL	GPM	HEAD (FT)	HP	RPM	V	PH	FLA	NOTES (#)
RCP	BELL & GOSSETT	100	5	12	1/12	1725	115	1	1.75	(1)

NOTES:

1. RECIRCULATING PUMP: BRONZE BODY RECIRCULATING PUMP, INSTALL NEAR WATER HEATER PER MANUFACTURER'S INSTRUCTIONS. PROVIDE WITH AQUASTAT SET TO 5°F BELOW WATER HEATER OPERATING TEMPERATURE.

FIXTURE & EQUIPMENT CONNECTION SCHEDULE

VERIFY QUANTITIES WITH ARCHITECTURAL EQUIPMENT PLAN AND SCHEDULE.

			DOMESTIC WATER								SANITARY							NATURAL GAS			
SYMBOL	QUANTITY	GENERAL FIXTURE DESCRIPTION	FILTERED WATER - FCW 1	FILTERED WATER - FCW 2	FILTERED WATER - FCW 3	FILTERED WATER - FCW 4	COLD WATER	HOT WATER (140°)	HOT WATER (110°)	MOUNTING HEIGHT	DRAIN LINE SIZE	TRAP	FIXTURE DRAIN	DIRECT / INDIRECT (D/I)	SANITARY / GREASE (S/G)	VENT	MOUNTING HEIGHT	CONNECTION SIZE	BTU LOAD	USED COOKING OIL	REMARKS (#)
PLUMBING FIXTURES																					
WC	2	WATER CLOSET (ACCESSIBLE)					1¼"			(2)	4"	INT	4"	D	S	2"	FL				(3), (5), (6)
LAV	2	LAVATORY					½"		½"	(2)	1½"	1½"	1½"	D	S	1½"	(2)				(3), (5), (6)
UR	1	URINAL					¾"			(2)	2	INT	1½"	D	S	1½"	(2)				(3), (5), (6)
FPWH	2	FROST PROOF WALL HYDRANT					¾"			18"											(3), (5), (6)
PLUMBING DRAINS																					
FD	13	FLOOR DRAIN									3"	3"			*	1½"	FL				(3), (8), (9)
FS-1	6	FLOOR SINK									3"	3"			*	1½"	FL				(3), (8), (9)
FS-2	1	FLOOR SINK									3"	3"			*	1½"	FL				(3), (8), (9)
HD	2	HUB DRAIN									3"	3"			*	1½"	12"				(3), (8), (9)
KITCHEN EQUIPMENT - FRONT COUNTER																					
E1408	1	INTEGRAL COUNTER SINK					½"		½"	(1)	2"	1½"	1½"	D	S	1½"	(1)				(4), (6), (8), (9), (16)
KITCHEN EQUIPMENT - BEVERAGE LINE																					
A0105	1	BEVERAGE SYSTEM (DRIVE-THRU)			½"					(1)				I	S						(4), (14), (15)
A1301	1	BEVERAGE DISPENSER (BUBBLER)			½"					(1)				I	S						(4), (14), (15)
E4003	1	DRIVE-THRU HAND SINK ASSEMBLY					½"		½"	14"	2"	1½"	1½"	D	S	1½"	(1)				(4), (8), (9), (16)
A0608	1	COFFEE BREWER		½"																	(4), (10), (13)
KITCHEN EQUIPMENT - SINGLE LINE COOK CENTER																					
A0801	1	TEA BREWER		½"																	(4), (10), (13)
KITCHEN EQUIPMENT - FRYLINE																					
K1401	1	COMBI OVEN			½"	½"				30"	3"	3"		I	G	1½"					(4), (10), (13)
KITCHEN EQUIPMENT - HAND SINK																					
T2702	1	HAND SINK					½"		½"	(1)	2"	1½"	1½"	D	S	1½"	(1)				(4), (6), (8), (9), (16)
KITCHEN EQUIPMENT - PREP AREA / WAREWASH																					
T2001	1	POWERSOAK SINK					½"	½"		14"				I	S						(4), (6), (7), (8), (9), (16)
T0931	1	2 COMP PREP SINK					½"	½"		14"				I	S						(4), (6), (7), (8), (9), (16)
T1213	1	CHEMICAL BLEND STATION (FOR T2001)					½"	½"		54"											(4), (16)
KITCHEN EQUIPMENT - CONDIMENT STAND																					
A0202	2	BEVERAGE SYSTEM (SELF-SERVE - DINING ROOM)			½"									I	S						(4), (14), (15)
QP0222	2	ICE MAKER (CUBER) - DINING ROOM	½"							(1)	3"	3"	¾"	I	S	1½"					(4), (6), (7), (10), (13)
Q1301	0	ICE & WATER DISPENSER	½"											I	S						(4), (14), (15)
KITCHEN EQUIPMENT - MOP SINK / CLEANING EQUIPMENT																					
T0303	1	MOP SINK FAUCET (FOR T0602 - LOWER)					½"	½"		36"											(4), (6), (16)
T0304	1	MOP SINK FAUCET (FOR T0602 - UPPER BLEND CENTER)					½"	½"		54"											(4), (6), (16)
T0602	1	MOP SINK									3"	3"	3"	D	S	1½"	FL				(4), (6), (16)
T1212	1	CHEMICAL BLEND CENTER					½"	½"		54"											(4), (16)
KITCHEN EQUIPMENT - DRINK EQUIPMENT																					
A0304	1	BAG-IN-BOX			½"																(4), (11), (16)
T2212	1	WATER FILTRATION SYSTEM					¾"														(4), (11), (12), (16)
T2213	1	REVERSE OSMOSIS SYSTEM			½"									I	S						(4), (14), (15)
QP0909	1	ICE MAKER (CUBER) - KITCHEN	½"							72"											

REMARKS (#)

1. MOUNTING HEIGHT AS DIRECTED BY EQUIPMENT SUPPLIER.
2. REFER TO MANUFACTURER'S INSTALLATION INSTRUCTIONS.
3. EQUIPMENT FURNISHED BY PLUMBING CONTRACTOR.
4. EQUIPMENT FURNISHED BY OTHERS.
5. REFER TO PLUMBING FIXTURE SCHEDULE.
6. PROVIDE VALVE AT EACH CONNECTION TO EQUIPMENT.
7. PLUMBING CONTRACTOR TO PROVIDE INDIRECT DRAIN TO FLOOR DRAIN OR SINK.
8. VERIFY DIRECT OR INDIRECT WASTE CONNECTION PER LOCAL CODE REQUIREMENTS.
9. VERIFY SANITARY OR GREASE WASTE CONNECTION PER LOCAL CODE REQUIREMENTS.
10. SHUTOFF VALVE AND FLEX CONNECTOR LINES TO PRE-RINSE ARE PROVIDED WITH FIXTURE.
11. PROVIDE WITH WATTS NO. 009 BACKFLOW PREVENTER IF REQUIRED BY CODE.
12. PROVIDE WITH WATTS NO. 0009 BACKFLOW PREVENTER WHEN LOCAL JURISDICTION REQUIRES A HIGHER LEVEL OF PROTECTION THAN PROVIDED BY THE INTEGRAL ASSE 1022 DOUBLE CHECK VALVE.
13. PLUMBING CONTRACTOR TO RUN WATER LINE TO FILTRATION SYSTEM WITH FINAL CONNECTIONS BY BEVERAGE INSTALLER.
14. BEVERAGE INSTALLER TO ROUTE LINE TO POINT OF USE AND PLUMBING CONTRACTOR TO MAKE FINAL CONNECTION.
15. WATER SUPPLY LINE IS PART OF THE BEVERAGE BUNDLE.
16. PLUMBING CONTRACTOR TO MAKE FINAL CONNECTIONS TO EQUIPMENT.
17. CONTACT EQUIPMENT CONSOLIDATOR - SEE SHEET G1.1. IF FIXTURES ARE NOT AVAILABLE LOCALLY. REFER TO BID DOCUMENTS IF GENERAL CONTRACTOR OR OWNER WILL PROVIDE EQUIPMENT THROUGH CONSOLIDATOR.

PLUMBING SYMBOLS LEGEND

NOT ALL SYMBOLS OR LINETYPES ARE NECESSARILY USED

ABBREVIATIONS:

AFF/AFG	ABOVE FINISHED FLOOR/GRADE
AHJ	AUTHORITY HAVING JURISDICTION
BFP	BACKFLOW PREVENTER
BV	BALL VALVE
WCO/CO	WALL CLEANOUT/ CLEANOUT
FCO/ECO	FLOOR/EXTERIOR CLEANOUT
RI	ROUGH-IN
TYP	TYPICAL
UNO	UNLESS NOTED OTHERWISE
VTR	VENT THRU ROOF
IW	INDIRECT WASTE

LINETYPES:

	COLD WATER (CW)
	COLD WATER (CW) - BELOW SLAB/GRADE
FW	FILTERED WATER SUPPLY (FW)
SYN	SYNFLEX (SYN) [BY OTHERS]
	HOT WATER (HW) 140°, 120°
	HOT WATER RETURN (HWR) 140°, 120°
UCO	USED COOKING OIL (UCO)
G	GAS LINE (G)
D	CONDENSATE LINE (D)
	PLUMBING VENT (V)
	PLUMBING VENT (V) - BELOW SLAB/GRADE
	SANITARY WASTE (SAN) - BELOW SLAB/GRADE
GW	GREASE WASTE (GW) - BELOW SLAB/GRADE

PIPE SYMBOLS:

- PIPE TURNING UP/DOWN
- TEE TURNING UP/DOWN
- SHUTOFF VALVE (BALL TYPE)
- CHECK VALVE
- BALANCING VALVE
- END CAP
- WALL HYDRANT

SITE NUMBER:	12281
BASE MDL:	SMART 55 - SQUARE 2017
ASSET TYPE:	FRANCHISEE
CLASSIFICATION:	NEW
OWNER:	WENSPOK
BASE VERSION:	2017
UPGRADE CLASSIFICATION:	NEW BUILD
PROJECT YEAR:	2020
FURNITURE PACKAGE:	2016 V3
DRAWING RELEASE	JANUARY 2020

Russell C. Page
ARCHITECTS
204 N. Division Street, Suite 'E'
Spokane, WA 99202
(509) 467-9748 Fx: (509) 467-9817

PROJECT TYPE: NEW SMART 55 SQE

Wendy's
HIGHWAY 95
PONDERAY, ID 83852

REV.	DATE	DESCRIPTION

ISSUE DATE: 5-28-2020
PROJECT NUMBER: 20-113
DRAWN BY: AUTHOR
CHECKED BY: CHECKER

SEAL
LICENSED ARCHITECT AR 984311
8/10/20
RUSSELL C. PAGE
STATE OF IDAHO

SHEET NAME
PLUMBING SCHEDULES AND NOTES

SHEET NUMBER
P1.0

CODED NOTES:

1. EXTEND SANITARY LINE TO MAIN. FIELD VERIFY EXACT LOCATION WITH LOCAL UTILITY COMPANY PRIOR TO BID.
2. PROVIDE KITCHEN GREASE INTERCEPTOR. LOCATE CLEAR OF DRIVE-THRU LANE. REFER TO CIVIL DRAWINGS FOR FINAL LOCATION. REFER TO "GREASE INTERCEPTOR" DETAIL.
3. VENT RISER FROM UNDER FLOOR PIPING. REFER TO SANITARY ISOMETRIC FOR CONTINUATION.
4. PROVIDE SANITARY VENT THROUGH ROOF PER "VENT THRU ROOF (VTR)" DETAIL. LOCATE VENT MINIMUM OF 10'-0" AWAY FROM AIR INTAKES ON ROOF, UNLESS APPROVED BY ENGINEER PRIOR TO INSTALLATION. VTR SHALL BE EXTENDED HIGHER THAN ANY AIR INTAKES. LOCATE PER ROOF PLAN.
5. ROUTE CONDENSATE FROM FREEZER/COOLER TO FLOOR DRAIN. PROVIDE RAYCHEM GUARDIAN GM-51-IM HEAT TRACED LINE FROM INSIDE OF COOLER TO FLOOR DRAIN. (COORDINATE POWER FOR HEAT TRACE WITH ELECTRICAL PLANS.) REFER TO "COOLER/FREEZER CONDENSATE" DETAIL.
6. USED COOKING OIL MANIFOLD (BY OTHERS) AT 24" A.F.F. RUN WASTE OIL LINE DOWN SURFACE OF WALL AS TIGHT AS POSSIBLE TO THE MANIFOLD. EXTEND LINE TO USED COOKING OIL TANK AS SHOWN. MANIFOLD SYSTEM SUPPLIED BY EQUIPMENT SUPPLIER INSTALLED BY PLUMBING CONTRACTOR. REFER TO "USED OIL RECOVERY" DETAIL.
7. ROUTE USED COOKING OIL LINE MINIMUM OF 6" ABOVE CEILING FROM MANIFOLD TO RECOVERY TANK AS SHOWN PER PLAN. USE 3/4" BLACK IRON PIPE. SLOPE PIPING FROM MANIFOLD TO BACK OF BUILDING. REFER TO INSTALLATION MANUAL FOR EXACT PITCH. LINE CANNOT HAVE ANY TRAPS. USE ONLY BACK TO BACK 45 DEGREE ELBOW TO CHANGE DIRECTION.
8. GENERAL CONTRACTOR TO PROVIDE PIPE DOWN WALL. MANUFACTURER TO PROVIDE STAINLESS STEEL PIPE COVER. TURN INTO TANK SHED AT 89" A.F.F. STUB OUT EXTERIOR SIDE OF WALL. PIPING TO BE 3/4" BLACK IRON TO UNDERSIDE OF JOIST.
9. EMERGENCY DRAIN IN RESTROOM SHALL BE INSTALLED FLUSH TO GRADE WITH NO SLOPE. COORDINATE INSTALLATION HEIGHT WITH GENERAL CONTRACTOR TO ENSURE PROPER INSTALLATION.

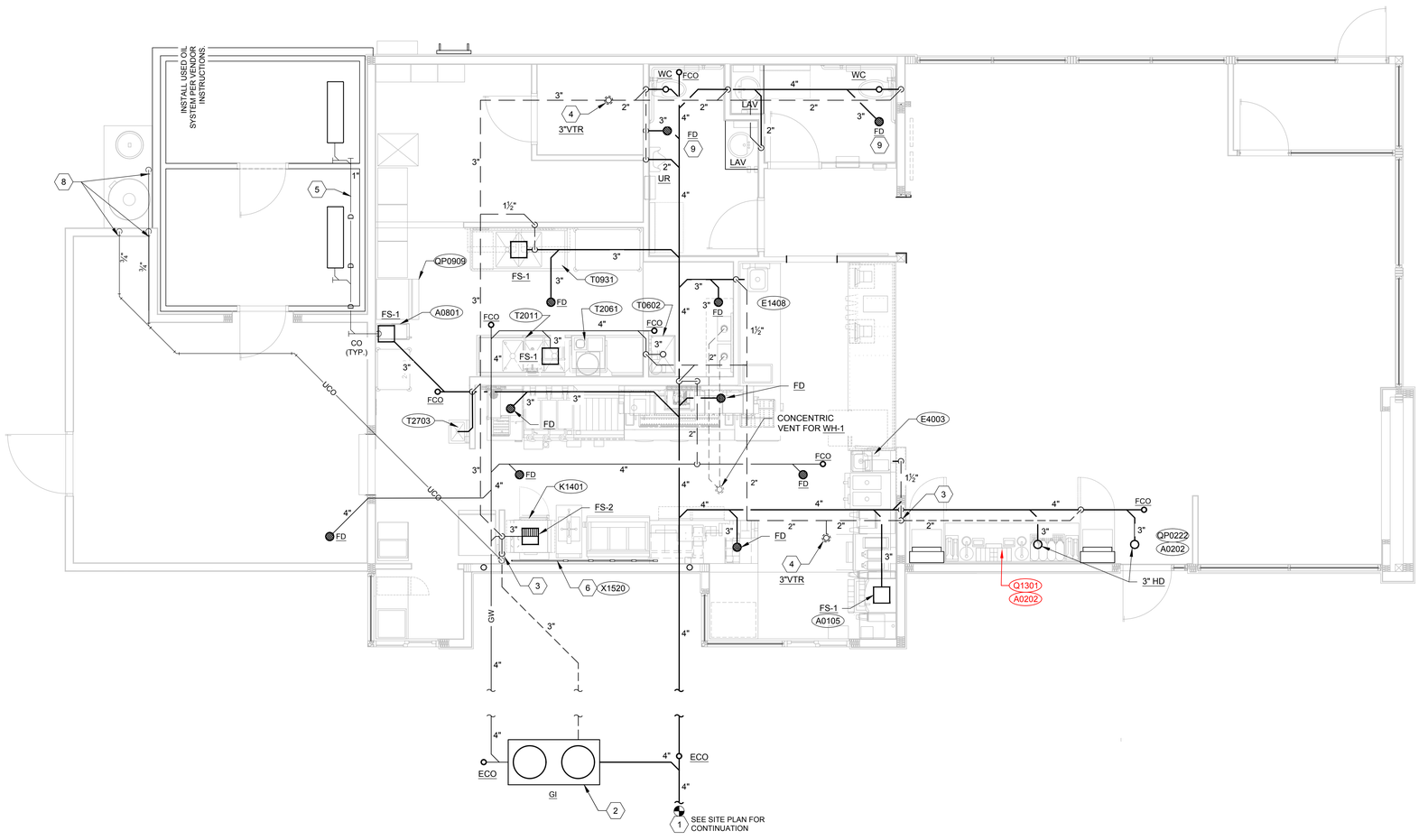

PLUMBING PLAN - SANITARY WASTE & VENT (1)
1/4" = 1'-0"

SITE NUMBER:	12281
BASE MDL:	SMART 55 - SQUARE 2017
ASSET TYPE:	FRANCHISEE
CLASSIFICATION:	NEW
OWNER:	WENSPOK
BASE VERSION:	2017
UPGRADE CLASSIFICATION:	NEW BUILD
PROJECT YEAR:	2020
FURNITURE PACKAGE:	2016 V3
DRAWING RELEASE	JANUARY 2020

Russell C. Page ARCHITECTS
204 N. Division Street, Suite 'E'
Spokane, WA 99202
(509) 467-9748 Fx: (509) 467-9817

PROJECT TYPE: NEW SMART 55 SQE

Wendy's®

HIGHWAY 95
PONDERAY, ID 83852

REV.	DATE	DESCRIPTION
△		
△		

ISSUE DATE: 5-28-2020

PROJECT NUMBER: 20-113

DRAWN BY: MB AUTHOR

CHECKED BY: CHECKER

SEAL

LICENSED ARCHITECT AR 984311
8/14/20
RUSSELL C. PAGE
STATE OF IDAHO

SHEET NAME

PLUMBING PLAN - SANITARY WASTE & VENT

SHEET NUMBER

P1.1

8/10/2020, 12:34 PM, N:\Home\20-113 WENDYS PONDERAY\90_SMART-1 0-55-SQUARE_P1-1_Plumbing Plan-Sanitary Waste & Vent.dwg, user

BEVERAGE EQUIPMENT NOTES

1. BEVERAGE EQUIPMENT SUPPLIER TO RUN NSF 61 TUBING FOR SODA DISPENSOR(S) AND SELF SERVE ICE MAKER(S).
2. GC, OR PLUMBING CONTRACTOR, TO MAKE FINAL CONNECTIONS FOR ICE MAKER(S).
2. GC, OR PLUMBING CONTRACTOR, TO PROVIDE OETIKER CLAMPS FOR CONNECTING BEVERAGE HOSES.
3. BEVERAGE EQUIPMENT SUPPLIER TO INSTALL SODA DISPENSERS AND ANCILLARY EQUIPMENT INCLUDING RACK, WATER BOOSTER, ETC.
4. BEVERAGE EQUIPMENT SUPPLIER TO INSTALL STAINLESS STEEL CHASE COVERS FOR NSF 61 TUBING.
5. BEVERAGE EQUIPMENT SUPPLIER TO CLEAN, SEAL, AND CAP CHASE.
6. BEVERAGE EQUIPMENT SUPPLIER TO INSTALL STAINLESS STEEL CHASE COVERS FOR NSF 61 TUBING.

CODED NOTES:

1. CHEMICAL FEED UNITS AND INSTALLATION KITS SUPPLIED BY OWNER'S REPRESENTATIVE AND INSTALLED BY CONTRACTOR. FEED STATION LOCATIONS ARE TO BE VERIFIED WITH OWNER. INSTALL PER MANUFACTURER'S RECOMMENDATIONS.
2. PLUMBING CONTRACTOR TO PROVIDE 1/2" INSULATED COPPER LINES IN WALL WITH BALL VALVE AT CONNECTION LOCATION AND MALE THREAD ADAPTOR ABOVE CEILING FOR CONNECTION BY BEVERAGE EQUIPMENT INSTALLER TO NSF 61 TUBING LINES.
3. BEVERAGE EQUIPMENT INSTALLER TO PROVIDE 1/2" NSF 61 TUBING FILTERED COLD WATER LINE FROM WATER FILTER TO CARBONATOR. BEVERAGE EQUIPMENT INSTALLER SHALL PROVIDE REQUIRED CODE APPROVED STAINLESS STEEL BACKFLOW PREVENTOR PRIOR TO CARBONATOR EQUIPMENT. NO COPPER WATER LINES SHALL BE USED FOR CARBONATED WATER LINES AFTER THE BACKFLOW PREVENTOR.
4. PROVIDE INDIVIDUAL MIXING VALVE FOR ALL HAND SINKS AND LAVATORIES IN AN ACCESSIBLE LOCATION.
5. BEVERAGE EQUIPMENT INSTALLER TO EXTEND NSF 61 TUBING FILTERED WATER LINE TO COMBI OVEN PER DRAWINGS. ON COMBI OVEN INSTALLATION, FLEXIBLE HOSE CONNECTOR FURNISHED BY KED AND INSTALLED BY PLUMBING CONTRACTOR. INSTALL HOSES BEHIND 10" SECTION OF WALL CHASE. SEE INSTALLATION INSTRUCTIONS FOR MORE INFORMATION. COORDINATE EXACT LOCATION WITH OWNER'S REPRESENTATIVE & MILLWORK PRIOR TO ROUGH-IN.
6. ROUTE 1¼" COLD WATER COPPER LINE FROM ABOVE CEILING DOWN TO APPROXIMATELY 30"+/- AFF FOR THE WATER CLOSET FLUSH VALVE. SEE RISER DIAGRAMS FOR DETAILS AND ARCHITECTURAL SHEETS FOR MORE INFORMATION. COORDINATE EXACT LOCATION WITH THE MANUFACTURER'S EQUIPMENT PRIOR TO ROUGH-IN.
7. EXTEND ¾" COLD WATER LINE TO WATER FILTRATION SYSTEM IN UTILITY AREA. PROVIDE ALL CHECK VALVES AND SHUT-OFF VALVES REQUIRED. HOOK UP AND COMMISSION WATER FILTRATION SYSTEMS, BOOSTER PUMP, AND REVERSE OSMOSIS (RO) SYSTEM PER MANUFACTURER'S RECOMMENDATIONS. VERIFY ALL RESPONSIBILITIES WITH OWNER AND PLUMBING FIXTURE SCHEDULE. REFER TO "WATER FILTRATION SYSTEM" DETAIL.
8. DROP 1" HW AND CW AND ½" HWR LINES TO WATER HEATER, EXPANSION TANK, AND RECIRCULATING PUMP. CONTRACTOR TO FURNISH AND INSTALL WATER HEATER. REFER TO "LARGE WATER HEATER", "RECIRCULATION PUMP", AND "SMALL EXPANSION TANK" DETAILS. DISCHARGE T&P RELIEF VALVE AND OVERFLOW TO DRAIN. PROVIDE VALVE AND UNION ON INLET AND OUTLET. PROVIDE BALANCING VALVES AS REQUIRED FOR RECIRCULATING SYSTEM.
9. BEVERAGE EQUIPMENT SUPPLIER TO RUN 1/2" COLD WATER NSF 61 TUBING LINE ABOVE CEILING TO DINING ROOM FOR CONNECTION TO BEVERAGE SYSTEM. FURNISH AND INSTALL SHUT OFF VALVES AND BACK-FLOW PREVENTERS AS REQUIRED TO MAKE FINAL CONNECTION. COORDINATE WITH OWNER'S REPRESENTATIVE. BEVERAGE BUNDLE WHICH INCLUDES SYRUP AND FILTERED WATER LINES TO RUN OVERHEAD ABOVE CEILING, EXTEND FROM FILTER SYSTEM AND THRU 6" ESCUTCHEON PLATE IN CEILING, EXTEND OVERHEAD TO DRINK UNITS THEN DOWN THRU CEILING AND THROUGH CHASE BEHIND BEVERAGE UNIT. VERIFY RESPONSIBILITIES WITH OWNER AND FIXTURE SCHEDULE.
10. EXTEND 3/4" HOT AND COLD WATER COPPER LINES DOWN FOR THE MOP SINK/FAUCET FROM MAIN. MAKE ALL FINAL CONNECTIONS. COORDINATE EXACT LOCATION PRIOR TO ROUGH-IN. MOP SINK AREA HAS 2 FAUCETS MOUNTED DIRECTLY ABOVE EACH OTHER. REFER TO CONNECTION SCHEDULE FOR MOUNTING HEIGHTS. MOP SINK AND HUB DRAIN PROVIDED BY KITCHEN EQUIPMENT SUPPLIER, SEE ARCHITECTURAL DETAILS. COORDINATE WITH ARCHITECTURAL AND KITCHEN VENDOR DRAWINGS FOR INSTALLATION INSTRUCTIONS.
11. BEVERAGE EQUIPMENT INSTALLER SHALL PROVIDE NSF 61 TUBING LINES, FOR COLD WATER SERVING BEVERAGE EQUIPMENT. LINES ARE SHOWN ARE SHOWN FOR REFERENCE ONLY. COORDINATE WITH OWNER'S REPRESENTATIVE.
12. ROUTE 3/4" HW TO SMALL WATER HEATER SERVING WAREWASH MACHINE. REFER TO "SMALL WATER HEATER ON PLATFORM" AND "WAREWASH W/ WATER HEATER" DETAILS.
13. EXTEND COPPER PIPING DOWN IN WALL TO FREEZE-PROOF WALL HYDRANT-WOODFORD MODEL 65 OR EQUAL, MOUNT 18" ABOVE FINISHED GRADE. VERIFY EXACT LOCATION WITH ARCHITECTURAL ELEVATIONS.
14. 1½" WATER METER AT FLOOR WITH RPZ BACKFLOW PREVENTER, PIPE DISCHARGE TO FLOOR DRAIN. EXTEND LINE TO MAIN. FIELD VERIFY EXACT LOCATION WITH WATER COMPANY.
15. PROVIDE PVC PLUMBING SLEEVE. VENDOR SUPPLIED NSF 61 TUBING LINES SHALL BE ROUTED THROUGH CHASE AND THROUGH WALL BY BEVERAGE EQUIPMENT INSTALLER. G1404 CHASE TO BE INSTALLED BY OTHERS.

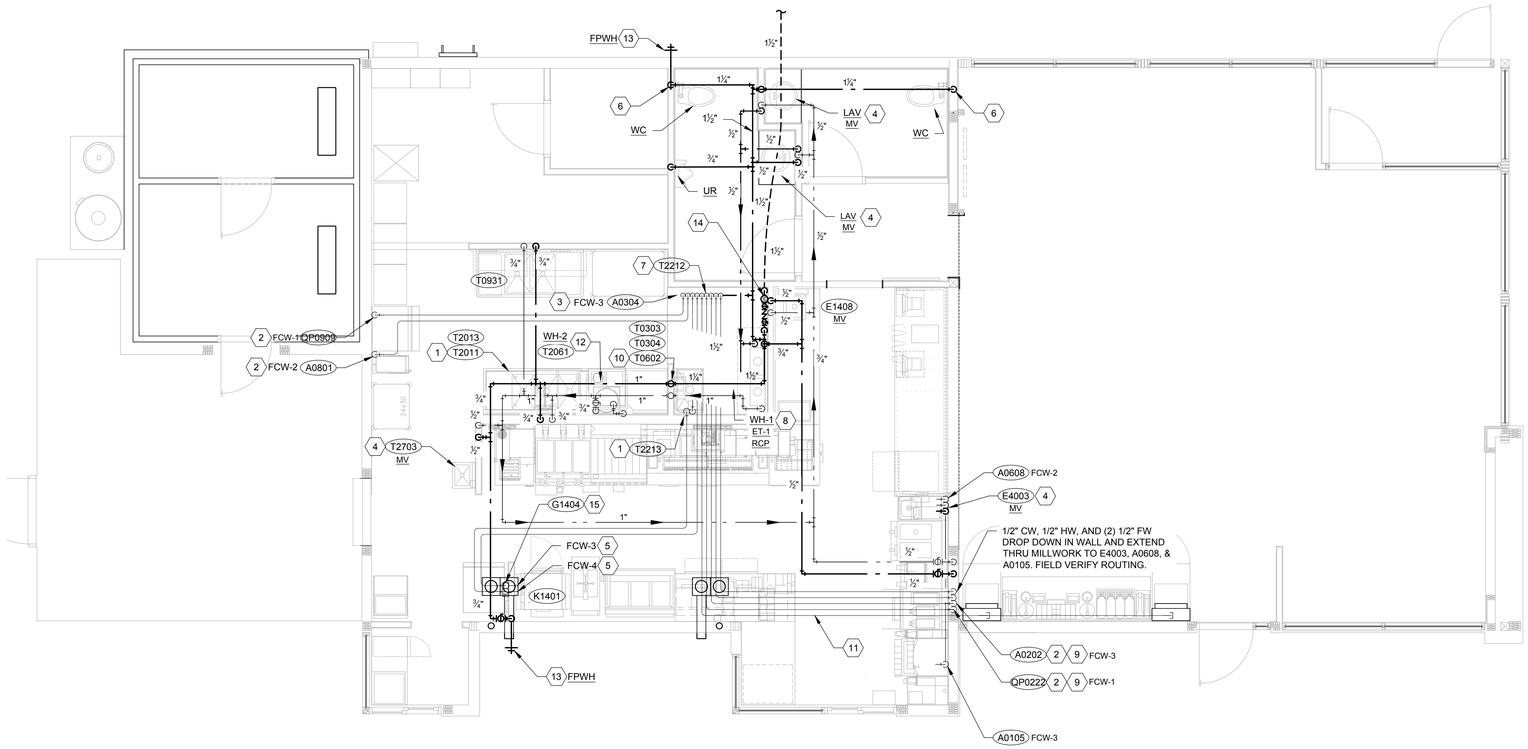

PLUMBING PLAN - DOMESTIC WATER (1)
1/4" = 1'-0"

SITE NUMBER:	12281
BASE MDL:	SMART 55 - SQUARE 2017
ASSET TYPE:	FRANCHISEE
CLASSIFICATION:	NEW
OWNER:	WENSPOK
BASE VERSION:	2017
UPGRADE CLASSIFICATION:	NEW BUILD
PROJECT YEAR:	2020
FURNITURE PACKAGE:	2016 V3
DRAWING RELEASE	JANUARY 2020

Russell C. Page ARCHITECTS
204 N. Division Street, Suite 'E'
Spokane, WA 99202
(509) 467-9748 Fx: (509) 467-9817

PROJECT TYPE: NEW
SMART 55 SQE

Wendy's
HIGHWAY 95
PONDERAY, ID 83852

REV.	DATE	DESCRIPTION
△		
△		

ISSUE DATE: 5-28-2020
PROJECT NUMBER: 20-113
DRAWN BY: MJ Author
CHECKED BY: Checker

SEAL

LICENSED ARCHITECT AR 984311
RUSSELL C. PAGE
STATE OF IDAHO

SHEET NAME
PLUMBING PLAN - DOMESTIC WATER

SHEET NUMBER
P1.2

12/22/2017 4:12:56 PM
8/10/2020, 12:17 PM, N:\Home\20-113 WENDYS PONDERAY\6\0_SMART-1.0-55-SQUARE_P1-2_Plumbing Plan-Domestic Water.dwg, user

CODED NOTES:

1. GAS SERVICE AND METER SETTING SIZED PER GAS COMPANY REQUIREMENTS FOR MAX CONNECTED LOADS AS SHOWN IN "NATURAL GAS CALCULATIONS" TABLE BELOW WITH TOTAL DEVELOPED LENGTH, INCLUDING FITTINGS, VALVES, ETC. OF 100 LINEAR FEET AND A TOTAL SYSTEM PRESSURE DROP OF 0.3" W.C. WITH 7" W.C. DELIVERED AT THE METER. HOLD GAS METER AND NATURAL GAS LINES TIGHT TO BUILDING. REFER TO "GAS SERVICE" DETAIL.
2. ROUTE NATURAL GAS LINE DOWN TO WATER HEATER AS SHOWN PER PLAN. COORDINATE EXACT LOCATION WITH MECHANICAL CONTRACTOR PRIOR TO INSTALLATION. REFER TO "LARGE WATER HEATER" DETAIL.
3. ROUTE NATURAL GAS UP THROUGH ROOF TO TO ROOFTOP EQUIPMENT AS SHOWN PER PLAN. COORDINATE EXACT LOCATION WITH MECHANICAL CONTRACTOR PRIOR TO INSTALLATION. REFER TO "ROOFTOP UNIT GAS CONNECTION" DETAIL. GAS LINES ON ROOF ARE TO BE PAINTED SAFETY YELLOW. GAS LINES MUST BE ROUTED TO ALLOW FULL ACCESS TO RTU EQUIPMENT.
4. PROVIDE GAS STUB FOR FUTURE GAS COOKLINE EQUIPMENT WITH VALVE AND CAP.

NATURAL GAS CALCULATIONS

EQUIPMENT	MBH
ROOFTOP EQUIPMENT:	
RTU-1	350
RTU-2	350
WATER HEATING	
WH-1	398
GAS COOKLINE (FUTURE)	
OPEN FRYER 3 WELL (FUTURE)	225
SYSTEM PRESSURE REQUIRED (FUTURE)	80
TOTAL GAS LOAD (MBH)	1403.0

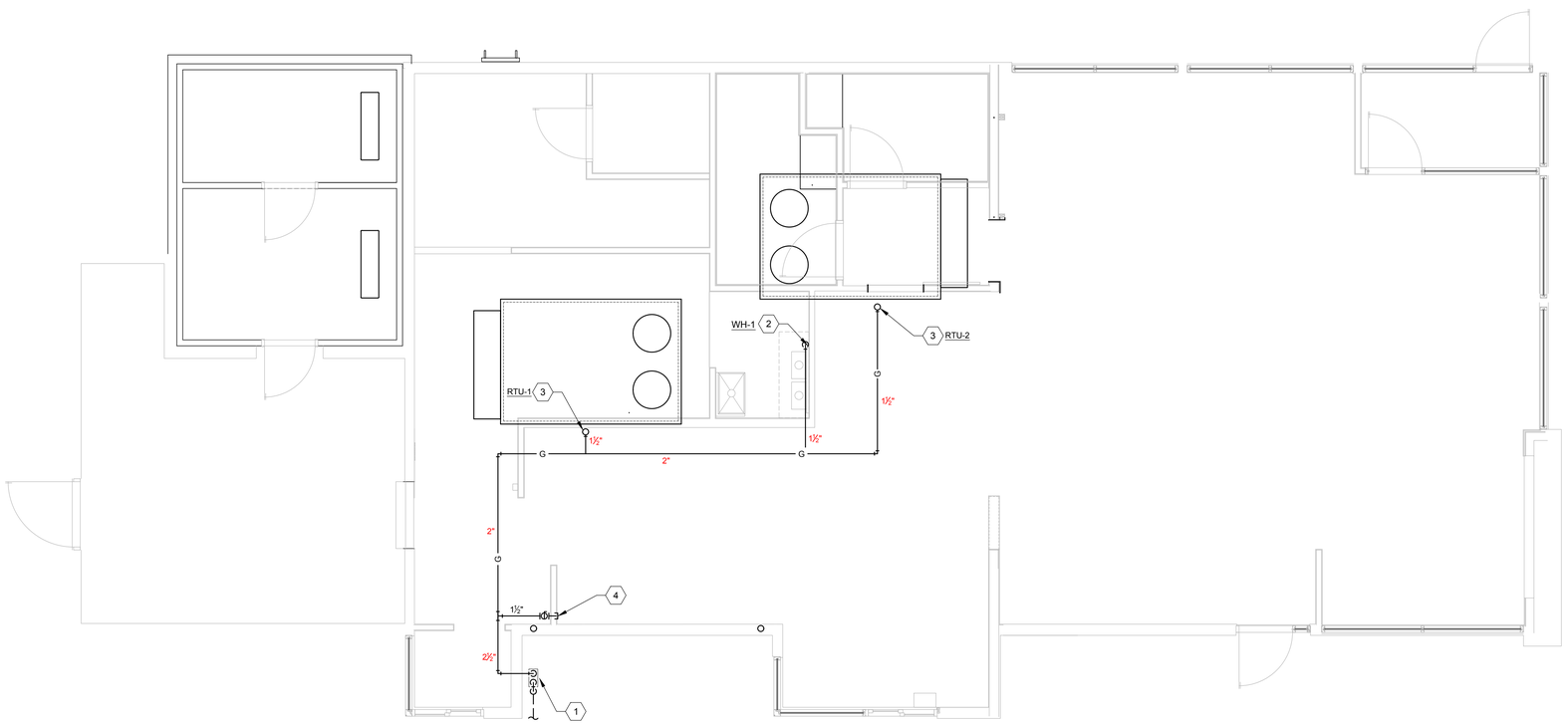

PLUMBING PLAN - NATURAL GAS (1)
1/4" = 1'-0"

SITE NUMBER:	12281
BASE MDL:	SMART 55 - SQUARE 2017
ASSET TYPE:	FRANCHISEE
CLASSIFICATION:	NEW
OWNER:	WENSPOK
BASE VERSION:	2017
UPGRADE CLASSIFICATION:	NEW BUILD
PROJECT YEAR:	2020
FURNITURE PACKAGE:	2016 V3
DRAWING RELEASE	JANUARY 2020

Russell C. Page ARCHITECTS
204 N. Division Street, Suite 'E'
Spokane, WA 99202
(509) 467-9748 Fx: (509) 467-9817

PROJECT TYPE: NEW SMART 55 SQE

Wendy's®

HIGHWAY 95
PONDERAY, ID 83852

REV.	DATE	DESCRIPTION
△		
△		

ISSUE DATE: 5-28-2020

PROJECT NUMBER: 20-113

DRAWN BY: MB Author

CHECKED BY: Checker

SEAL

LICENSED ARCHITECT AR 984311
5/14/20
RUSSELL C. PAGE
STATE OF IDAHO

SHEET NAME

PLUMBING PLAN - NATURAL GAS

SHEET NUMBER

P1.3

4/29/2020 8:07 PM; 20-113 WENDY'S PONDERAY 60L_SMART-1-0-55-SQUARE_P1-3_Plumbing Plan-Natural Gas.dwg, user

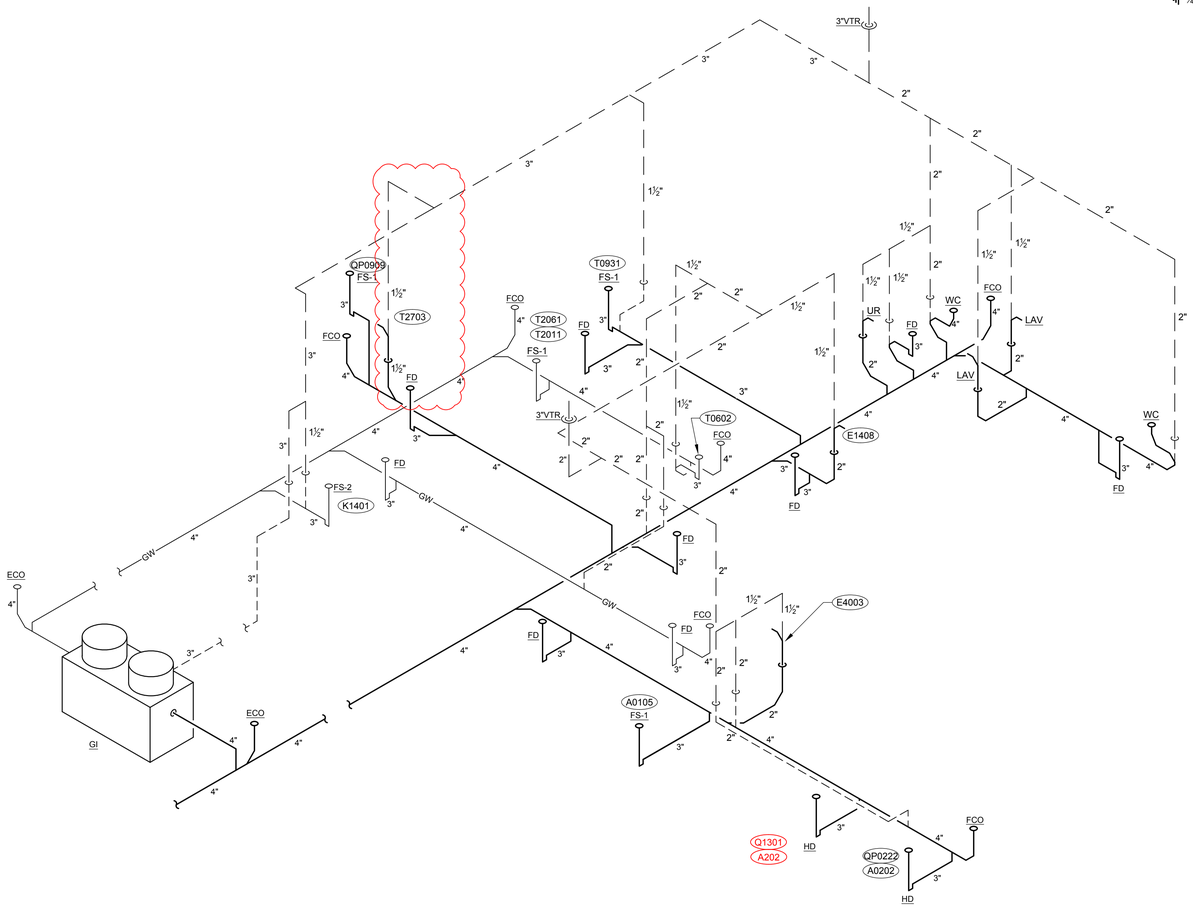

PLUMBING RISER - SANITARY WASTE & VENT (1)
NTS

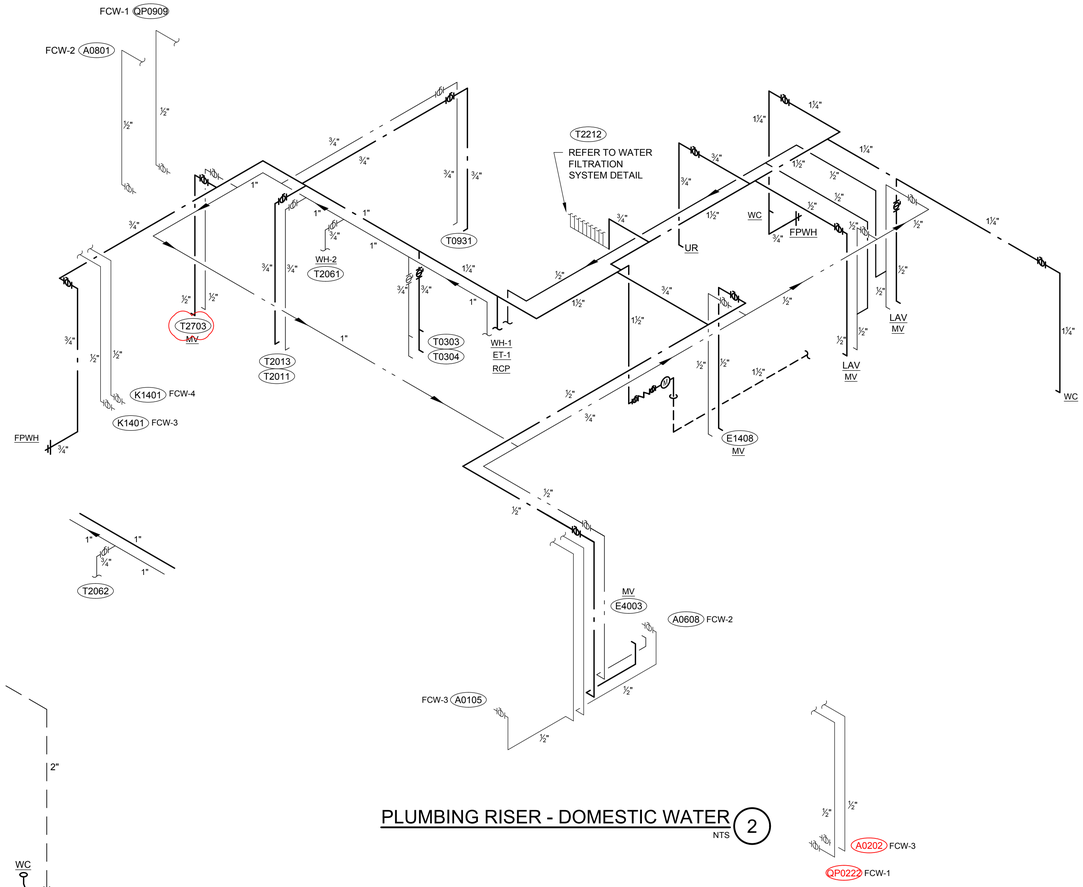

PLUMBING RISER - DOMESTIC WATER (2)
NTS

SITE NUMBER:	12281
BASE MDL:	SMART 55 - SQUARE 2017
ASSET TYPE:	FRANCHISEE
CLASSIFICATION:	NEW
OWNER:	WENSPOK
BASE VERSION:	2017
UPGRADE CLASSIFICATION:	NEW BUILD
PROJECT YEAR:	2020
FURNITURE PACKAGE:	2016 V3
DRAWING RELEASE	JANUARY 2020

Russell C. Page ARCHITECTS
204 N. Division Street, Suite 'E'
Spokane, WA 99202
(509) 467-9748 Fax: (509) 467-9817

PROJECT TYPE: NEW SMART 55 SQE

Wendy's
HIGHWAY 95
PONDERAY, ID 83852

REV.	DATE	DESCRIPTION

ISSUE DATE: 5-28-2020
PROJECT NUMBER: 20-113
DRAWN BY: MB Author
CHECKED BY: Checker

SEAL

LICENSED ARCHITECT AR 984311
5/14/20
RUSSELL C. PAGE
STATE OF IDAHO

SHEET NAME
PLUMBING RISERS

SHEET NUMBER
P2.0

5/28/2020 7:10:32 AM C:\Users\mbrown\Desktop\Home\20-113 WENDY'S PONDERAY\60_SMART-1-0-55-SQUARE_P2-0_Plumbing Risers.dwg, user

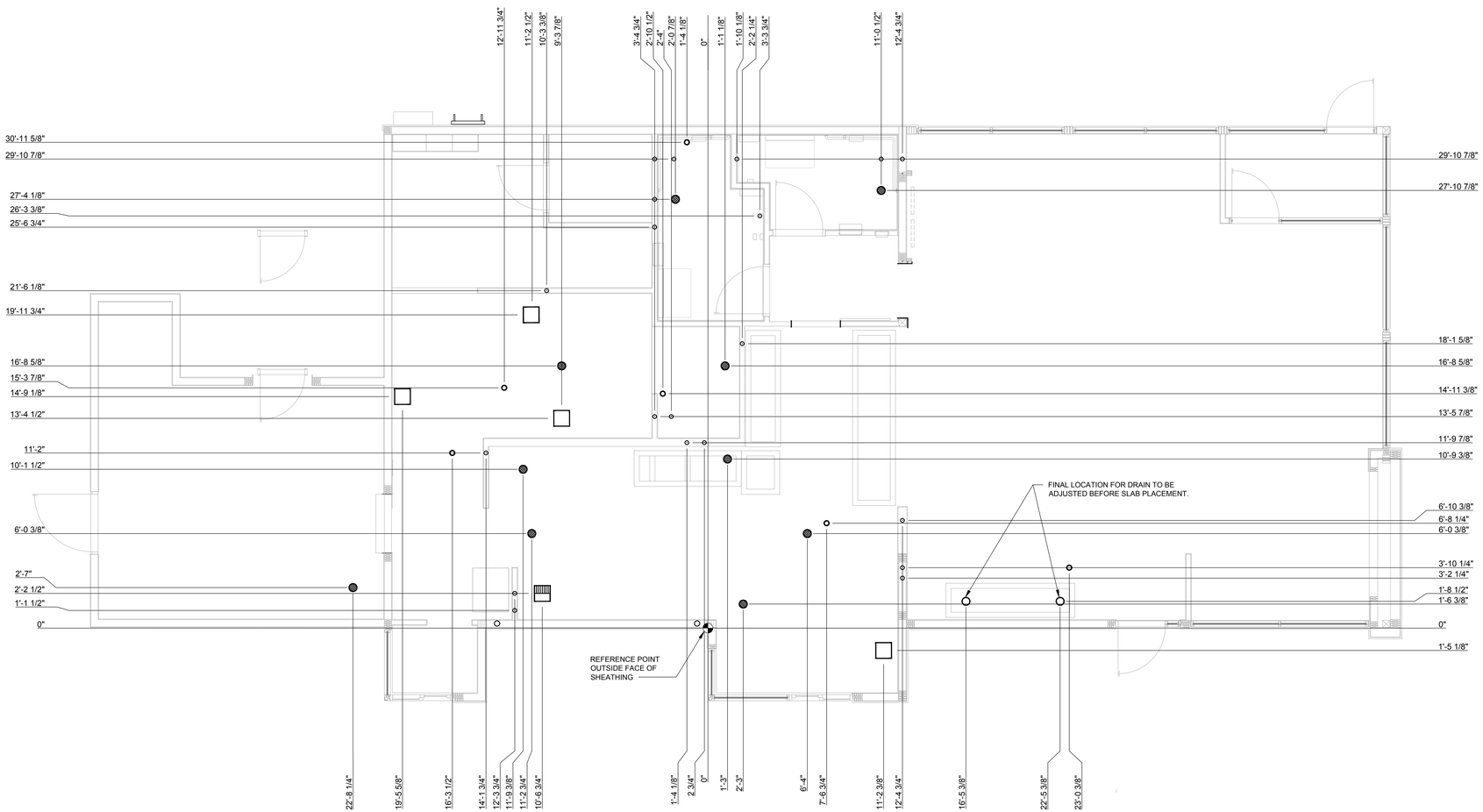

PLUMBING PLAN - DIMENSION CALLOUT (1)

1/4" = 1'-0"

DIMENSIONS ARE FOR REFERENCE ONLY. GENERAL CONTRACTOR TO VERIFY LAYOUT WITH WENDY'S REPRESENTATIVE.

SITE NUMBER:	12281
BASE MDL:	SMART 55 - SQUARE 2017
ASSET TYPE:	FRANCHISEE
CLASSIFICATION:	NEW
OWNER:	WENSPOK
BASE VERSION:	2017
UPGRADE CLASSIFICATION:	NEW BUILD
PROJECT YEAR:	2020
FURNITURE PACKAGE:	2016 V3
DRAWING RELEASE	JANUARY 2020

Russell C. Page ARCHITECTS
204 N. Division Street, Suite 'E'
Spokane, WA 99202
(509) 467-9748 Fx: (509) 467-9817

PROJECT TYPE: NEW SMART 55 SQE

Wendy's®

HIGHWAY 95
PONDERAY, ID 83852

REV.	DATE	DESCRIPTION
△		
△		

ISSUE DATE: 5-28-2020

PROJECT NUMBER: 20-113

DRAWN BY: MDAuthor

CHECKED BY: Checker

SEAL

LICENSED ARCHITECT AR 984311
RUSSELL C. PAGE
STATE OF IDAHO

SHEET NAME

PLUMBING DIMENSION PLAN

SHEET NUMBER

P3.0

5/28/2020 7:01:18 PM K:\Home\20-113 WENDYS PONDERAY\90_SMART-1.0-55-SQUARE_P3-0_Plumbing Dimension Plan.dwg, user

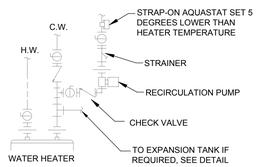

PIPING ARRANGEMENT SHOWN IS SCHEMATIC. ADJUST TO SUIT FIELD CONDITIONS. REFER TO "LARGE WATER HEATER" DETAIL FOR MORE INFORMATION.

RECIRCULATION PUMP (20)
NOT TO SCALE

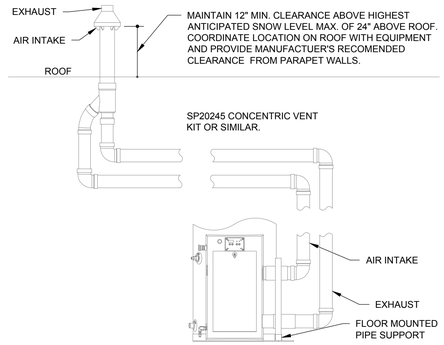

CONCENTRIC VENT (16)
NOT TO SCALE

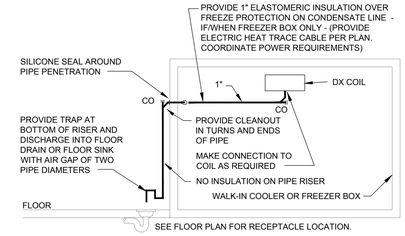

INSTALL PIPE HIGH AS POSSIBLE, ANCHORED TO WALL OF BOX WITH SUPPORTS AT MAXIMUM SIX FOOT CENTERS. USE TYPE "M" HARD COPPER TUBE AND FITTINGS WITH LEAD-FREE SOLDER JOINTS. SLOPE HORIZONTAL PIPE AT MINIMUM TWO PERCENT. REFER TO LOCAL CODE FOR INDIRECT DRAIN REQUIREMENTS. ELECTRICAL AND PLUMBING CONTRACTORS TO COORDINATE WORK. ELECTRICAL CONTRACTOR TO PROVIDE AND INSTALL HEAT TRACING.

COOLER/FREEZER CONDENSATE (08)
NOT TO SCALE

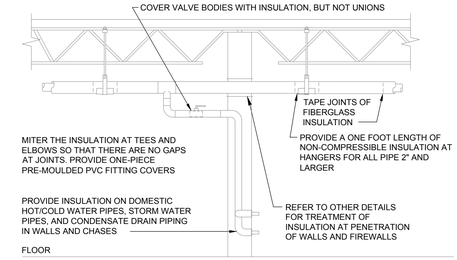

PROVIDE FIBERGLASS INSULATION WITH ALL-SERVICE JACKET WITH VAPOR BARRIER ON ALL COLD/HOT WATER PIPING AND CONDENSATE DRAIN PIPE. REFER TO SPECIFICATIONS FOR FURTHER INFORMATION REGARDING INSULATION. INSTALL ALL ITEMS PER SPECIFICATIONS AND MANUFACTURERS INSTRUCTIONS. MAINTAIN VAPOR BARRIER ON COLD PIPING BY MEANS OF SEALANT AND TAPE. FLAME-SPREAD AND SMOKE-DEVELOPED INDEXES SHALL NOT EXCEED 25/50. SEAL EXPOSED ENDS OF FIBERGLASS INSULATION WITH ADHESIVE MASTIC.

PIPE INSULATION (04)
NOT TO SCALE

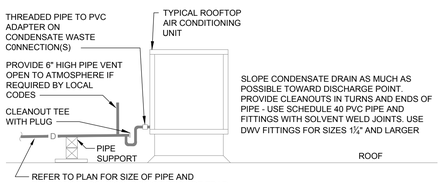

PIPING ARRANGEMENT SHOWN IS SCHEMATIC. ADJUST AS REQUIRED TO SUIT ACTUAL CONDITIONS. REFER TO LOCAL CODE FOR INDIRECT DRAIN REQUIREMENTS.

ROOFTOP UNIT CONDENSATE (19)
NOT TO SCALE

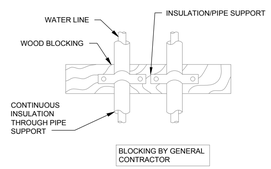

PIPE SUPPORT (IN-WALL) (15)
NOT TO SCALE

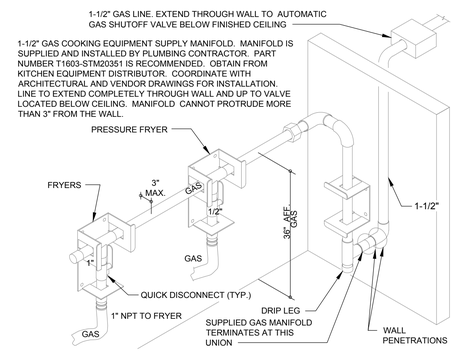

NATURAL GAS COOKING MANIFOLD (11)
NOT TO SCALE

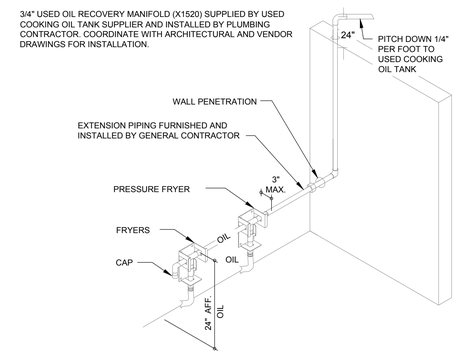

USED OIL RECOVERY MANIFOLD (07)
NOT TO SCALE

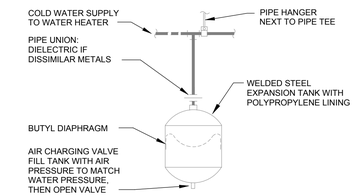

PIPING ARRANGEMENT SHOWN IS SCHEMATIC. ADJUST TO SUIT FIELD CONDITIONS. MAKE PIPE SAME SIZE AS TANK FITTING. FOLLOW MANUFACTURER'S INSTRUCTIONS FOR INSTALLATION PROCEDURE. VERIFY PROPER OPERATION WHEN INSTALLED.

EXPANSION TANK INSTALLATION SHALL OCCUR ONLY WHEN THERE IS A BACKFLOW PREVENTION DEVICE INSTALLED WITHIN THE BUILDING WATER SYSTEM.

SMALL EXPANSION TANK (03)
NOT TO SCALE

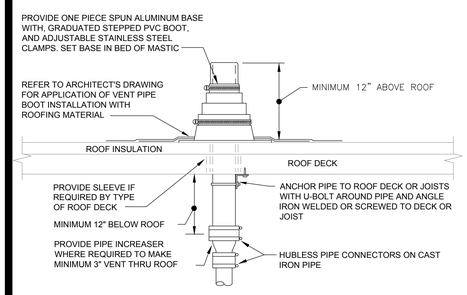

REFER TO PLANS FOR VTR PIPE SIZES AND LOCATIONS. LOCATE VTR A MINIMUM OF 10 FEET HORIZONTAL (UNLESS APPROVED BY ENGINEER PRIOR TO INSTALLATION) OR THREE FEET VERTICAL ABOVE ANY BUILDING OPENING OR FRESH AIR INTAKE, AND ONE FOOT FROM ANY VERTICAL SURFACE. PROVIDE 1" FIBERGLASS INSULATION WITH ALL-SERVICE JACKET ON VENT PIPE INSIDE BUILDING WITHIN SIX FEET OF VENT THRU ROOF LOCATION. VERIFY FLASHING AND COUNTERFLASHING WITH ROOFING CONTRACTOR.

VENT THRU ROOF (VTR) (18)
NOT TO SCALE

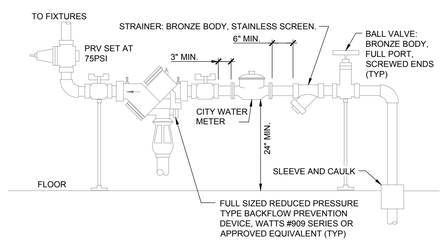

DETAIL SHOWS GENERAL SCHEMATIC REQUIREMENTS. PROVIDE BACKFLOW PREVENTER OF TYPE AND MANUFACTURER APPROVED BY LOCAL AUTHORITIES. PROVIDE PRESSURE REDUCING VALVE ONLY IF PRESSURE EXCEEDS 80 PSI - VERIFY. STRAINER AND REDUCING VALVE MAY BE INSTALLED IN VERTICAL PIPE IF SPACE LIMITATIONS REQUIRE IT. CLEAN STRAINER BEFORE TURNING BUILDING OVER TO OWNER. PROVIDE ANY REQUIRED CERTIFICATION OF TEST OF BACKFLOW PREVENTER TO LOCAL AUTHORITIES.

DOMESTIC WATER SERVICE ENTRY (14)
NOT TO SCALE

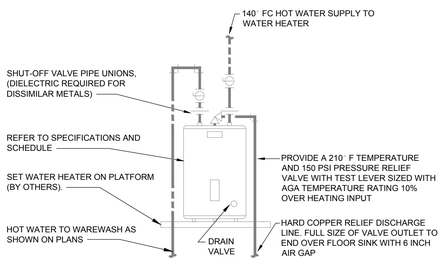

PIPING ARRANGEMENT SHOWN IS SCHEMATIC. ADJUST TO SUIT FIELD CONDITIONS. REFER TO FLOOR PLAN FOR PIPE SIZES. SET WATER HEATER THERMOSTAT AT 140° FAHRENHEIT. PROVIDE SEISMIC STRAP OR BRACING AND FLEXIBLE CONNECTORS TO WATER AND GAS CONNECTIONS IF/AS REQUIRED BY LOCAL AUTHORITIES.

SMALL WATER HEATER ON PLATFORM (10)
NOT TO SCALE

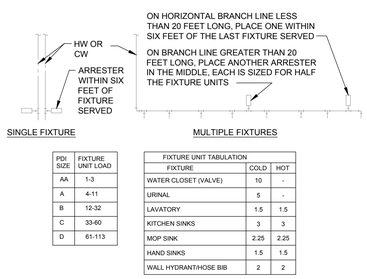

PDI SIZE	FIXTURE UNIT LOAD
AA	1-3
A	4-11
B	12-32
C	33-60
D	61-113

FIXTURE UNIT TABULATION

FIXTURE	COLD	HOT
WATER CLOSET (VALVE)	10	-
URINAL	5	-
LAVATORY	1.5	1.5
KITCHEN SINKS	3	3
MOP SINK	2.25	2.25
HAND SINKS	1.5	1.5
WALL HYDRANT/HOSE BIB	2	2

PC TO PROVIDE WATER HAMMER ARRESTERS BY SIOUX CHIEF, PRECISION PLUMBING PRODUCTS, WATTS OR APPROVED EQUIVALENT WITH PISTON AND O-RING CONSTRUCTION, HAVING PDI #WH-201, ASSE #1010 OR ANSI #A112.26.1M CERTIFICATION. SIZE AND INSTALL PER PDI #WH-201 STANDARD OR MANUFACTURER'S INSTRUCTION. THE TABLES ABOVE ARE BASED ON THE SIOUX CHIEF PRODUCT LINE. IF PRESSURE IS IN EXCESS OF 65 PSIG THEN UPSIZE THE ARRESTER BY ONE (EXAMPLE: AN 'A' ARRESTER WOULD BECOME A 'B' ARRESTER.)

WATER HAMMER ARRESTORS (06)
NOT TO SCALE

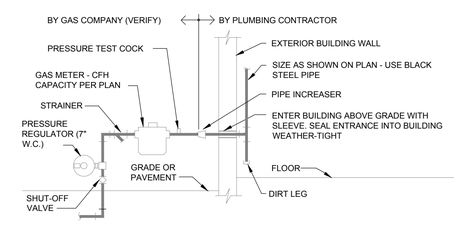

VERIFY REQUIREMENTS FOR METERING AND PIPING WITH GAS COMPANY. GAS COMPANY SHALL EXCAVATE, BACKFILL, AND REPAIR PAVING AND SOD FOR GAS SERVICE LINE INSTALLATION FROM MAIN TO BUILDING. PLUMBING CONTRACTOR TO PAY ALL GAS COMPANY FEES FOR THIS INSTALLATION. USE WELDED OR SCREWED PIPE AND FITTINGS PER SPECIFICATIONS. PAINT EXPOSED METAL GAS PIPE, FITTINGS AND ITEMS TO MATCH BUILDING.

GAS SERVICE (02)
NOT TO SCALE

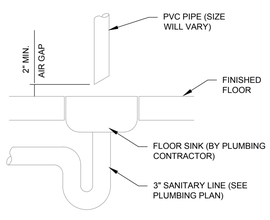

INDIRECT DRAIN (19)
NOT TO SCALE

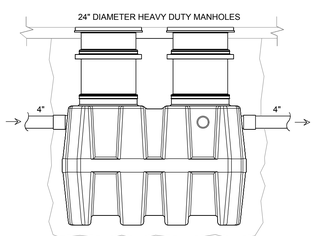

BED OF UNDISTURBED EARTH OR COMPACTED SAND BACKFILL: 4" - 6"

GB-250 - 100 GPM - 275 GALLON CAPACITY:
DETAIL SHOWS GENERAL SCHEMATIC REQUIREMENTS. CONTRACTOR SHALL SUBMIT PROPOSED GREASE INTERCEPTOR INSTALLATION PLANS AND SPECIFICATIONS TO LOCAL AUTHORITIES FOR THEIR APPROVAL BEFORE ACQUISITION. SEE MANUFACTURER INSTALLATION MANUAL FOR ADDITIONAL INSTRUCTIONS.

GREASE INTERCEPTOR (15)
NOT TO SCALE

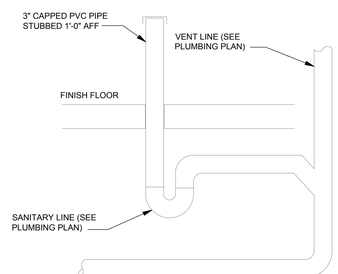

HUB DRAIN (09)
NOT TO SCALE

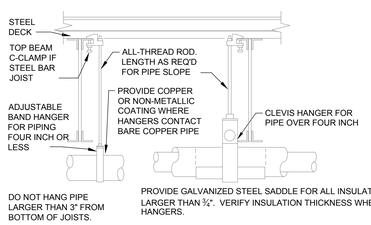

PROVIDE UPPER ATTACHMENT AS REQUIRED FOR CASES NOT SHOWN HERE. DO NOT INSTALL HANGER INSIDE INSULATION OR OTHERWISE PENETRATE VAPOR BARRIER. DO NOT HANG ONE PIPE FROM ANOTHER EXCEPT IN CHASES. TRAPEZE HANGERS MAY BE USED FOR MULTIPLE PARALLEL PIPES. HANGER SPACING FOR PIPE SIZE: COPPER: 4"=12'-0"; 3"=11'-0"; 2½"=10'-0"; 2"=9'-0"; 1½"=8'-0"; 1¼"=7'-0"; 1" & ¾"=6'-0"; ½"=5'-0". CAST IRON: 10'-0" AND ONE NEAR ALL JOINTS. STEEL: 4"=14'-0"; 3"=12'-0"; 2½"=11'-0"; 2"=10'-0"; 1½"=9'-0"; 1"=7'-0"; ¾"=6'-0"; ½"=5'-0". LOCATE HANGERS AS CLOSE AS POSSIBLE TO TURNS AND TEES OF PIPE. PROVIDE SUPPLEMENTARY STEEL STRUTS BETWEEN JOISTS IF REQUIRED. LOCATE HANGERS TO TAKE LOAD OFF OF EQUIPMENT CONNECTIONS. ANCHOR WATER PIPE AGAINST SWAYING DUE TO CHANGES IN WATER VELOCITY. PROVIDE SEISMIC BRACING IF/AS REQUIRED BY LOCAL AUTHORITIES. CHAINS OR PERFORATED STRAP IRON OR STEEL IS NOT ACCEPTABLE. REFER TO CODES FOR FURTHER INFORMATION.

PIPE HANGERS (05)
NOT TO SCALE

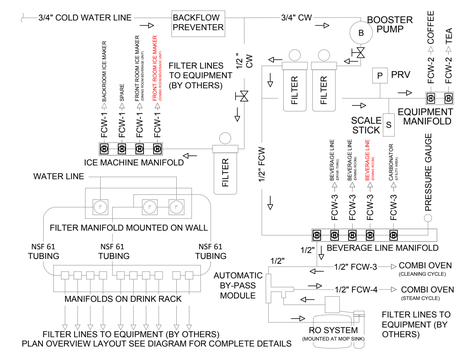

PLAN OVERVIEW LAYOUT SEE DIAGRAM FOR COMPLETE DETAILS

WATER FILTRATION SYSTEM (01)
NOT TO SCALE

SITE NUMBER:	12281
BASE MDL:	SMART 55 - SQUARE 2017
ASSET TYPE:	FRANCHISEE
CLASSIFICATION:	NEW
OWNER:	WENSPOK
BASE VERSION:	2017
UPGRADE CLASSIFICATION:	NEW BUILD
PROJECT YEAR:	2020
FURNITURE PACKAGE:	2016 V3
DRAWING RELEASE	JANUARY 2020

Russell C. Page ARCHITECTS
204 N. Division Street, Suite 'E'
Spokane, WA 99202
(509) 467-9748 Fax: (509) 467-9817

PROJECT TYPE: NEW
SMART 55 SQE

Wendy's®
HIGHWAY 95
PONDERAY, ID 83852

REV.	DATE	DESCRIPTION
△		
△		

ISSUE DATE: 5-28-2020
PROJECT NUMBER: 20-113
DRAWN BY: MR/Author
CHECKED BY: Checker

SEAL
LICENSED ARCHITECT AR 984311
5/14/2020
RUSSELL C. PAGE
STATE OF IDAHO

SHEET NAME
PLUMBING DETAILS

SHEET NUMBER
P4.0

8/10/2020, 12:34 PM, N:\Home\20-113 WENDY'S PONDERAY\60_SMART-1.0-55-SQUARE_P4-X_Plumbing Details.dwg, user

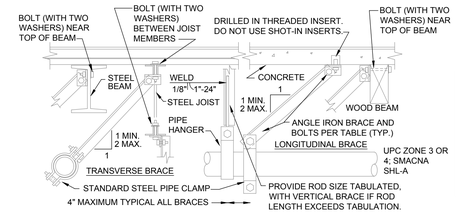

PIPE SIZE	SPACING		TRANSVERSE BRACE	LONGITUDINAL BRACE	BOLT SIZE	ROD SIZE	MAX. ROD LENGTH	VERTICAL BRACE
	TR.	LO.						
1"-2"	20'	20'	2"X2"X18GA	2"X2"X18GA	¼"	⅜"	20"	2"X2"X18GA
2½"-3"	40'	40'	2½"X2½"X16GA	2½"X2½"X16GA	⅜"	½"	25"	2"X2"X16GA
4"-5"	40'	40'	2½"X2½"X16GA	2½"X2½"X16GA	½"	⅝"	31"	2"X2"X16GA
6"	40'	40'	2½"X2½"X12GA	2½"X2½"X12GA	½"	¾"	37"	2½"X2½"X16GA
8"	40'	40'	2½"X2½"X12GA	2½"X2½"X12GA	⅝"	⅞"	43"	2½"X2½"X12GA
10"	20'	20'	2½"X2½"X12GA	2½"X2½"X12GA	¾"	⅞"	43"	2½"X2½"X12GA

DO NOT BRACE ANY PIPES WHERE TOP OF PIPE TO BOTTOM OF UPPER ATTACHMENT IS LESS THAN 12". BRACE GAS, OIL AND AIR PIPES 1" AND LARGER. BRACE ALL PIPES IN EQUIPMENT ROOMS 1-1/4" AND LARGER. BRACE ALL OTHER PIPE 2-1/2" AND LARGER. BRACE HUBLESS CAST IRON PIPE ON EACH SIDE OF ANY CHANGE IN DIRECTION OF 90 DEGREES OR MORE. MAXIMUM HANGER ROD LENGTH IS 6 FEET. WHERE LENGTH OF RUN EXCEEDS LONGITUDINAL BRACE SPACING, PROVIDE 2 FEET OFFSET IN PIPE AND LOCATE BRACE AT MID RUNS. REFER TO CURRENT EDITION OF SMACNA "SEISMIC RESTRAINT MANUAL" FOR ALTERNATIVE ATTACHMENTS AND ADDITIONAL INFORMATION AND REQUIREMENTS. (THIS DETAIL APPLIES IN THE ABSENCE OF OTHER LOCAL CODE REQUIREMENTS.)

SEISMIC BRACING FOR PIPE (04)
NOT TO SCALE

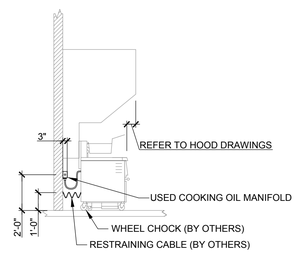

ELECTRIC FRYER INSTALLATION (10)
NOT TO SCALE

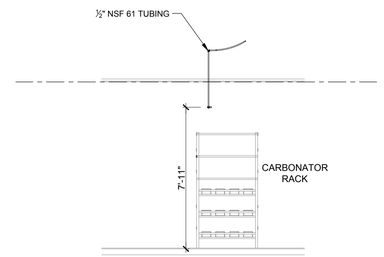

CARBONATOR RACK ROUGH-IN (07)
NOT TO SCALE

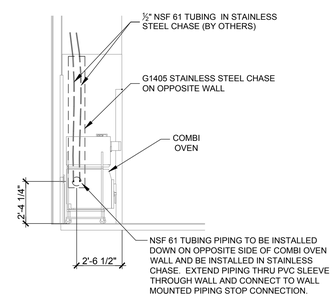

COMBI OVEN WATER ROUGH-IN (06)
NOT TO SCALE

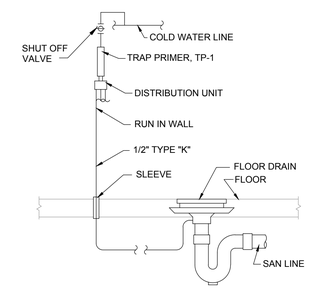

TRAP PRIMER (02)
NOT TO SCALE

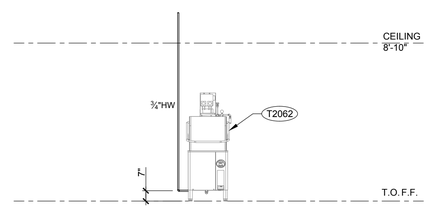

WAREWASH W/ BOOSTER HEATER (08)
NOT TO SCALE

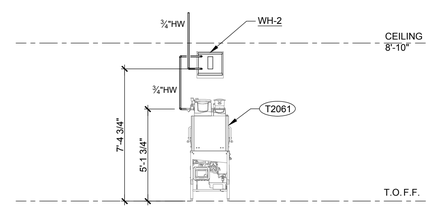

WAREWASH W/ WATER HEATER (05)
NOT TO SCALE

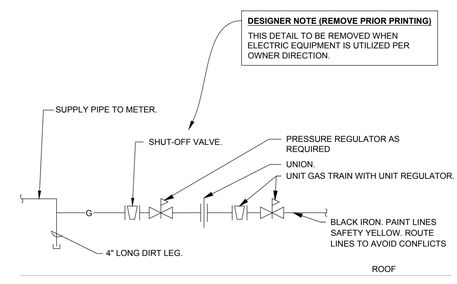

ROOFTOP UNIT GAS CONNECTION (01)
NOT TO SCALE

SITE NUMBER:	12281
BASE MDL:	SMART 55 - SQUARE 2017
ASSET TYPE:	FRANCHISEE
CLASSIFICATION:	NEW
OWNER:	WENSPOK
BASE VERSION:	2017
UPGRADE CLASSIFICATION:	NEW BUILD
PROJECT YEAR:	2020
FURNITURE PACKAGE:	2016 V3
DRAWING RELEASE	JANUARY 2020

Russell C. Page ARCHITECTS
204 N. Division Street, Suite 'E'
Spokane, WA 99202
(509) 467-9748 Fx: (509) 467-9817

PROJECT TYPE: NEW
SMART 55 SQE

Wendy's®
HIGHWAY 95
PONDERAY, ID 83852

REV.	DATE	DESCRIPTION

ISSUE DATE: 5-28-2020
PROJECT NUMBER: 20-113
DRAWN BY: MR Author
CHECKED BY: Checker

SEAL
LICENSED ARCHITECT AR 984311
RUSSELL C. PAGE
STATE OF IDAHO

SHEET NAME
PLUMBING DETAILS

SHEET NUMBER
P4.1

8/10/2020, 12:34 PM, N:\Home\20-113 WENDY'S PONDERAY\60_SMART-1.0-55-SQUARE_P4-X_Plumbing Details.dwg, user

PLUMBING SPECIFICATIONS

20500 GENERAL PROVISIONS

A. PROVIDE ALL MATERIALS AND EQUIPMENT AND PERFORM ALL LABOR REQUIRED TO INSTALL A PLUMBING SYSTEM, COMPLETE AS INDICATED ON THE DRAWINGS, AS REQUIRED BY CODE AND AS SPECIFIED HEREIN.

B. WITHOUT RESTRICTING THE GENERALITY OF THE FIRST STATEMENT, THE WORK TO BE PERFORMED UNDER THIS DIVISION SHALL INCLUDE, BUT IS NOT LIMITED TO, THE FOLLOWING:

1. PLUMBING WORK AS DESCRIBED IN SECTIONS 220500 THROUGH 224000.

C. THE ELECTRICAL CONTRACTOR, UNLESS OTHERWISE NOTED, IS TO PROVIDE POWER WIRING FOR EACH ITEM OF ELECTRICAL EQUIPMENT AND MAKE FINAL CONNECTIONS TO MOTORS.

D. ALL FINISH PAINTING IS TO BE PERFORMED BY THE GENERAL CONTRACTOR, EXCEPT AS NOTED ELSEWHERE. THIS CONTRACTOR SHALL RESTORE TO ORIGINAL CONDITION ANY PAINTING DEFACED BY THIS CONTRACTOR AFTER ORIGINAL PAINTING.

E. ALL WORK SHALL CONFORM TO CODES, RULES, AND REGULATIONS:

1. STATE PLUMBING CODE.
2. LOCAL BUILDING CODE.
3. NATIONAL FIRE PROTECTION ASSOCIATION.
4. CERTAIN CODES AND STANDARDS AS SET UP BY VARIOUS TECHNICAL SOCIETIES SUCH AS ASME, ASHRAE, ASTM, SMACNA, ARI, AABC, OR IEEE.
5. FEDERAL OCCUPATIONAL SAFETY AND HEALTH STANDARDS.
6. LOCAL INSPECTOR'S REQUIREMENTS.
7. STATE INDUSTRIAL COMMISSION REQUIREMENTS.
8. BUILDING INSURING AGENCY REQUIREMENTS.

F. ALL PERMITS REQUIRED BY LAWS, ORDINANCES AND BUILDING CODES HAVING JURISDICTION SHALL BE OBTAINED AT THE PROPER TIME BY AND AT THE EXPENSE OF THIS CONTRACTOR.

G. THIS CONTRACTOR SHALL OBTAIN ALL INSPECTIONS REQUIRED BY ALL LAWS, ORDINANCES AND PUBLIC AUTHORITY HAVING JURISDICTION AND SHALL OBTAIN CERTIFICATES OF SUCH INSPECTIONS AND SUBMIT SAME TO THE ARCHITECT AND SHALL PAY ALL FEES, CHARGES, ASSESSMENTS AND OTHER EXPENSES IN CONNECTION THEREWITH.

H. PIPING AND EQUIPMENT LAYOUT IS SCHEMATIC. EXACT LOCATIONS ARE DETERMINED BY STRUCTURAL AND OTHER CONDITIONS. DESIGN OF SYSTEM MAY NOT BE CHANGED. ONLY EXACT LOCATION OF PIPING MAY BE REVISED TO SUIT CONSTRUCTION CONDITIONS AND AID IN COORDINATION WITH WORK OF OTHER CONTRACTORS.

I. THE MATERIALS AND EQUIPMENT INSTALLED IN THE WORK SHALL MEET THE REQUIREMENTS OF THE CONTRACT DOCUMENTS AND NO MATERIALS OR EQUIPMENT SHALL BE ORDERED UNTIL REVIEWED BY THE ENGINEER AND/ OR ARCHITECT.

J. THIS CONTRACTOR SHALL SUBMIT SHOP DRAWINGS PER THE DOCUMENTS PROVIDED BY THE OWNER/ARCHITECT/CONTRACTOR.

1. EXPANSION TANK
2. DRAINS AND CLEANOUTS
3. VALVES
4. ALL PLUMBING FIXTURES, FAUCETS AND FITTINGS
5. WATER HEATER
6. PIPE INSULATION
7. GREASE INTERCEPTOR

K. CATALOG DATA FOR EQUIPMENT REVIEWED BY THE ARCHITECT SHALL NOT SUPERSEDE THE ENGINEER'S CONTRACT DOCUMENTS. THE REVIEW OF THE ENGINEER SHALL NOT RELIEVE THE CONTRACTOR FROM RESPONSIBILITY FOR DEVIATIONS FROM DRAWINGS OR SPECIFICATIONS, PROVIDING PROPER CLEARANCE FABRICATION PROCESS AND COORDINATION WITH OTHER TRADES.

L. WHEN SUBMITTED FOR THE ARCHITECT'S REVIEW, SHOP DRAWINGS SHALL BEAR THE CONTRACTOR'S CERTIFICATION THAT THEY HAVE REVIEWED, CHECKED AND APPROVED THE SHOP DRAWINGS, THAT THEY ARE IN HARMONY WITH THE REQUIREMENTS OF THE PROJECT AND WITH THE PROVISIONS OF THE CONTRACT DOCUMENTS AND THAT THEY HAVE VERIFIED ALL FIELD MEASUREMENTS AND CONSTRUCTION CRITERIA, MATERIALS, CATALOG NUMBERS AND SIMILAR DATA. CONTRACTOR SHALL ALSO CERTIFY THAT THE WORK REPRESENTED BY THE SHOP DRAWINGS IS RECOMMENDED BY THE CONTRACTOR AND THE CONTRACTOR'S GUARANTEE WILL FULLY APPLY.

M. ALL CONTRACTORS SUBMITTING PROPOSALS FOR THIS WORK SHALL FIRST EXAMINE THE SITE AND ALL CONDITIONS THEREIN. ALL PROPOSALS SHALL TAKE INTO CONSIDERATION ALL SUCH CONDITIONS AS MAY AFFECT THE WORK UNDER THIS CONTRACT. THE SUBMITTING OF A BID AUTOMATICALLY IMPLIES THAT THIS EXAMINATION OF SITE HAS BEEN DONE.

N. CONTRACTOR SHALL VERIFY LOCATION OF UTILITIES AND NOTE CONDITIONS WHICH WOULD AFFECT THE WORK. ALL DISCREPANCIES SHALL THEN BE REPORTED PRIOR TO THE BID AWARD.

O. PROVIDE INSTRUCTION TO OWNER'S OPERATING PERSONNEL AS NECESSARY, SHOWING LOCATIONS AND PROPER OPERATION OF MAJOR ITEMS OF EQUIPMENT AND SYSTEM COMPONENTS AND REFERRING TO THE OPERATING INSTRUCTION MANUAL DESCRIBED BELOW AS A GUIDE.

P. COMPILE A WRITTEN MANUAL OF OPERATING INSTRUCTIONS INCLUDING COPIES OF SHOP DRAWINGS AND A LISTING OF EQUIPMENT SUPPLIERS. ASSEMBLE IN 8-1/2" X 11" HARD BACKED INDEXED BINDER. MATERIAL SHALL BE AS FOLLOWS:

1. TITLE PAGE: TITLE OF JOB, TENANT, ADDRESS, DATE OF SUBMISSION, CONTRACTOR AND ENGINEER.
2. INDEX.
3. ST OF MAJOR EQUIPMENT USED IN PROJECT ACCOMPANIED BY CONTRACTOR PURCHASE ORDER NUMBERS AND SUPPLIERS NAMES AND ADDRESSES.
4. ONE COPY OF EACH SHOP DRAWING GROUPED BY TYPES OF EQUIPMENT, I.E., PLUMBING FIXTURES, VALVES, ETC.
5. SECTION FOR EACH SYSTEM INCLUDING:
   - 5.1. BRIEF DESCRIPTION OF SYSTEM OPERATION WITH LOCATION OF MAJOR COMPONENTS.
   - 5.2. LIST OF ITEMS IN SYSTEM REQUIRING PERIODIC SERVICE.

Q. SUBMIT A COMPLETED COPY TITLED "PLUMBING OPERATING INSTRUCTION MANUAL" ON THE BINDING EDGE OF BINDER TO ARCHITECT FOR APPROVAL. AFTER ARCHITECT'S REVIEW AND ANY CORRECTIONS REQUIRED ARE COMPLETED, SUBMIT A COPY OF THE MANUAL, TO THE OWNER.

220502 FIRESTOPPING

A. EACH CONTRACTOR SHALL BE RESPONSIBLE FOR FIRESTOPPING AROUND ALL OPENINGS FOR PIPES, DUCTS, CONDUITS ETC., INSTALLED BY CONTRACTOR AT ALL FIRE WALLS. FIRESTOPPING SHALL BE PERFORMED BY AN INSTALLER WHO HAS BEEN TRAINED BY THE MANUFACTURER, OR MANUFACTURER'S REPRESENTATIVE, IN THE INSTALLATION PROCEDURES BASED ON PUBLISHED UL TESTED FIRE STOP SYSTEMS.

B. FIRESTOPPING SHALL MEET THE REQUIREMENTS OF ASTM E-814 OR UL 1479 FIRE TESTS BY A RECOGNIZED TESTING AGENCY. FIRESTOPPING SHALL ALSO CONFORM TO THE FOLLOWING GOVERNING CODES: INTERNATIONAL BUILDING CODE, NFPA 101- LIFE SAFETY CODE & NFPA 70 - NATIONAL ELECTRIC CODE.

C. PENETRATION

1. CLEAN PENETRATION HOLES OF DIRT, LOOSE MATERIALS AND FOREIGN MATTER WHICH MAY AFFECT BOND OR INSTALLATION.
2. REMOVE COATINGS SUCH AS PAINT, CURING COMPOUNDS, WATER REPELLENT & SEALERS AS REQUIRED.
3. INSTALL BACKING MATERIALS TO PREVENT LIQUID MATERIAL LEAKAGE.

D. APPLICATION

1. PREPARE AND APPLY PENETRATION SEALING SYSTEMS IN ACCORDANCE WITH MANUFACTURER'S PRINTED INSTRUCTIONS.
2. EMPLOY INSTALLATION TECHNIQUES WHICH WILL ENSURE THAT FIRESTOPPING IS DEPOSITED TO FILL AND SEAL HOLES AND OPENINGS.
3. TOOL EXPOSED SURFACES OF APPLIED SEALANT TO SMOOTH FINISH.
4. PROTECT MATERIALS FROM DAMAGE ON SURFACES SUBJECTED TO TRAFFIC.

E. PROVIDE INTUMESCENT SEALANTS AND COLLARS AT OPENINGS INVOLVING PLASTIC OR INSULATED PIPE SIMILAR TO THE METACAULK SERIES 880 AND 950.

F. FIRESTOPPING BY DOW CORNING, 3M, HILTI OR METACAULK MAY FURNISHED AT THE CONTRACTOR'S OPTION.

220529 PIPE ANCHORS, HANGERS AND SUPPORTS

A. ALL PIPING SHALL BE SEPARATELY HUNG AND SUPPORTED FROM APPROVED STRUCTURAL MEMBERS OR CONCRETE OVERHEAD STRUCTURE ONLY. NO PIPE SHALL BE HUNG FROM ROOF DECK, PIPE, DUCTS OR OTHER COMPONENTS OR EQUIPMENT OF OTHER TRADES.

B. PROVIDE LISTED/APPROVED ADJUSTABLE HANGERS, INSERTS, BRACKETS, CLAMPS, SUPPLEMENTARY STEEL AND OTHER DEVICES REQUIRED FOR PROPER SUPPORT OF ALL PIPE LINES.

C. HANGERS SHALL BE DESIGNED TO ALLOW FOR EXPANSION AND CONTRACTION AND TO ALLOW INSULATION (WHERE APPLICABLE) TO RUN CONTINUOUSLY THROUGH HANGERS.

D. WIRE OR STRAP HANGERS ARE NOT PERMITTED. ADJUST HANGERS SO AS TO DISTRIBUTE WEIGHT LOAD EQUALLY ON ATTACHMENTS.

220548 PLUMBING SYSTEM TESTING

A. SYSTEM TESTING SHALL PROVIDE FOR THE FOLLOWING:

1. TEST NEW INTERIOR DOMESTIC WATER SYSTEM.
2. TEST ALL SOIL, WASTE, AND VENT PIPING.
3. FURNISH ALL PUMPS FOR AIR AND WATER PRESSURE TESTS ALONG WITH GAUGES AND ANY OTHER REQUIRED TEST EQUIPMENT.
4. UNDERGROUND LINES TO BE TESTED BEFORE BEING CONCEALED. CONTRACTOR SHALL REPAIR ANY LEAKS AND ALL DAMAGE RESULTING THEREFROM.
5. CHANGES IN AMBIENT TEMPERATURE WILL BE TAKEN INTO ACCOUNT WHEN TESTING UNDERGROUND PIPING, HOWEVER, THE VARIOUS SYSTEMS SHALL BE THOROUGHLY INSPECTED FOR LEAKS BEFORE HYDROSTATIC PRESSURE TESTS ARE CONCLUDED.
6. INTERIOR WATER PIPING: HYDROSTATIC TEST AT 125 PSI AWWA PROCEDURES AND TO THE SATISFACTION OF LOCAL AUTHORITY HAVING JURISDICTION.
7. SOIL, WASTE, AND VENT PIPING SHALL BE WATER AND SMOKE OR AIR TIGHT (STATE PLUMBING CODE).

B. MEASURE LEAKAGE BY METERING WATER REQUIRED TO MAINTAIN LINE PRESSURE. REMOVE AIR BEFORE TESTING.

C. REPAIR ANY LEAKING JOINTS AND DEMONSTRATE ACCEPTABLE LEAKAGE TO SATISFACTION OF OWNER'S REPRESENTATIVE AND APPROVING AUTHORITY. FLUSH ALL PIPING BEFORE PLACING INTO OPERATION.

220550 STERILIZATION

A. STERILIZE NEW DOMESTIC WATER LINES AFTER INSTALLATION.

B. FURNISH A CERTIFICATE OF STERILIZATION AND APPROVAL FOR HUMAN CONSUMPTION TO BE SIGNED BY A PROFESSIONAL ENGINEER REGISTERED IN THIS STATE, REGULARLY EMPLOYED BY THE TESTING LABORATORY. CERTIFICATE MUST BE GIVEN TO THE ARCHITECT AND OWNER BEFORE FINAL PAYMENT WILL BE MADE.

C. STERILIZATION SHALL BE BY MEANS OF CHLORINE INJECTED INTO THE WATER SYSTEM NEAR THE SOURCE AND OUTLETS THROUGHOUT THE SYSTEM SHALL BE TESTED TO PROVE PRESENCE OF MINIMUM REQUIREMENTS. LEAVE CHLORINE IN FOR 24 HOURS AND FLUSH OUT SYSTEM UPON COMPLETION OF WORK. STERILIZATION PROCEDURE SHALL BE WITNESSED BY THE OWNER'S REPRESENTATIVE.

D. STERILIZATION SHALL BE PERFORMED UNDER THE IMMEDIATE SUPERVISION OF A WATER TESTING LABORATORY REGULARLY ENGAGED IN THE SERVICE AND SHALL BE DONE ACCORDING TO THEIR INSTRUCTIONS.

220553 EQUIPMENT IDENTIFICATION

A. STENCILS, LABELS, TAGS, AND COLOR CODES SHALL CONFORM TO ANSI A13.

B. PRODUCTS SHALL BE SETON. EQUAL PRODUCTS BY BRADY MAY BE FURNISHED AT CONTRACTOR'S OPTION.

C. STENCILS SHALL BE REUSABLE AND HAVE 1" HIGH CHARACTERS. CHARACTERS SHALL BE PAINTED WHITE OVER A BLACK BACKGROUND. INCLUDE ON PIPING A WHITE (OR BLACK) STENCILED ARROW IN FLOW DIRECTION NEXT TO STENCIL. STENCIL ONLY AFTER FINAL PAINTING IS COMPLETE. CHARACTERS SHALL BE LEGIBLE FROM FLOOR. APPLY CLEAR ACRYLIC, LACQUER, OR VARNISH OVER THE FINISHED STENCIL.

D. PREPRINTED FLEXIBLE VINYL LABEL WITH PERMANENT PRESSURE SENSITIVE ADHESIVE BACK MAY BE USED ON PIPE INSTEAD OF STENCIL. LABEL SHALL BE OF SUFFICIENT LENGTH TO ENCIRCLE THE PIPE (AND INSULATION WHEN APPLICABLE) AND OVERLAP ON ITSELF. EACH LABEL SHALL HAVE AT LEAST ONE FLOW DIRECTION ARROW AND SHALL BE PERMANENTLY LABELED WITH PIPE CONTENT.

E. PIPING, VALVES, DRAINS, CONTROL PANELS AND SIMILAR EQUIPMENT SHALL BE IDENTIFIED AS TO FUNCTION AND SYSTEM NUMBER AS DIRECTED BY THE OWNER'S REPRESENTATIVE AND AS LISTED BELOW:

IDENTIFICATION ITEM : TYPE
PIPING : STENCIL OR PIPE LABEL
VALVES : TAG
PIPING SPECIALTY : TAG
WATER HEATER AND OTHER EQUIPMENT : STENCIL

F. IDENTIFY PIPE LINES WITH STENCIL OR PIPE LABEL WITH COLOR CODED BANDS AT THE FOLLOWING LOCATIONS:

1. AT EQUIPMENT CONNECTION AT EACH VALVE.
2. AT BOTH SIDES OF WALLS THROUGH WHICH PIPE PASSES.
3. AT EVERY 20 FT. INTERVAL ON CONTINUOUS PIPE LINES.
4. AT EACH BRANCH CONNECTION.
5. SHOW FLOW DIRECTION ARROWS AT EACH IDENTIFICATION POINT.

220700 INSULATION

A. PIPE INSULATION AND APPURTENANCES AND COVERINGS ON PIPES USED IN CHASES, SHAFTS OR OTHER CONCEALED SPACES IN TYPES 1 AND 2 CONSTRUCTION SHALL HAVE A FLAME SPREAD RATING NOT EXCEEDING TWENTY-FIVE (25) AND IN TYPE 3 AND 4 CONSTRUCTION NOT EXCEEDING SEVENTY-FIVE (75) AND A SMOKE DEVELOPED RATING NOT EXCEEDING FIFTY (50).

B. INSULATION SHALL BE RIDGE ONE-PIECE FIBERGLASS PIPE INSULATION WITH REQUIREMENTS COMPLYING WITH ASTM C 547, SELF-SEALING ADHESIVE LAP LONGITUDINAL JOINTS AND BUTT STRIPS FOR TRANSVERSE JOINTS. JACKETING SHALL CONFORM TO ASTM C 1136, TYPE I, MAXIMUM VAPOR TRANSMISSION RATING OF 0.02 PERM WHEN TESTED ACCORDING TO ASTM E 96, PROCEDURE A. (K VALVE) 0.25 BTU/IN./HR. * FT2 * °F AT 75°F MEAN TEMPERATURE WITH A MINIMUM R-VALVE OF R4.

PROVIDE INSULATION THICKNESS AS INDICATED:
DOMESTIC COLD WATER PIPING 1" AND SMALLER: 1/2" THICKNESS.
DOMESTIC COLD WATER PIPING 1-1/4" - 1-1/2": 3/4" THICKNESS.
DOMESTIC COLD WATER 2" AND LARGER: 1" THICKNESS.
DOMESTIC HOT WATER PIPING 3/4" AND SMALLER: 1" THICKNESS.
DOMESTIC HOT WATER PIPING 1" - 1-1/2: 1-1/2" THICKNESS.
PLUMBING VENT PIPING WITHIN 6 FEET OF ROOF OUTLET: 1" THICKNESS.
CONDENSATE PIPING: 1/2" THICKNESS.

C. GLUE IN PLACE WITH SCHULLER U-GLUE.

D. THE FITTINGS SHALL BE INSULATED WITH SCHULLER ZESTON INSULATION AND HAVE FACTORY PREMOLDED PVC COVERS. BUTT THE JOINTS TOGETHER AND WRAP WITH 3" WIDE STRIP TAPE, SEAL IN PLACE WITH SCHULLER U-GLUE.

E. INSULATION SHALL NOT BE APPLIED UNTIL THE GENERAL CONSTRUCTION HAS PROGRESSED SUFFICIENTLY TO INSURE AGAINST PHYSICAL OR MOISTURE DAMAGE TO THE INSULATION. ALL INSULATION DAMAGED THROUGH FAILURE TO OBSERVE THIS DIRECTIVE SHALL BE REPLACED AT PLUMBING CONTRACTOR'S EXPENSE.

F. INSTALL ALL INSULATION ACCORDING TO MANUFACTURER'S RECOMMENDATIONS.

G. INSULATION SHALL NOT BE APPLIED OVER FLANGES, JOINTS AND SEAMS IN PIPING.

H. INSULATION SHALL BE SCHULLER. EQUAL PRODUCT BY ARMSTRONG, CERTAINTEED, OWENS-CORNING OR KNAUF MAY BE FURNISHED AT THE CONTRACTOR'S OPTION.

221113 PLUMBING BASIC MATERIALS AND METHODS

A. PROVIDE AND ERECT THE FOLLOWING PIPING AS SHOWN ON THE DRAWINGS AND/OR AS REQUIRED.

1. SANITARY BUILDING DRAIN AND VENT PIPING SHALL BE SERVICE WEIGHT CAST IRON SOIL PIPE.
2. SCHEDULE 40 PVC PIPING MAY BE USED FOR SANITARY WASTE AND VENT PIPING AT THE CONTRACTOR'S OPTION IF CEILING SPACE IS NOT USED AS A RETURN AIR PLENUM SPACE.
3. DOMESTIC HOT AND COLD WATER USE TYPE "L" HARD COPPER PIPE.
4. CAST IRON - NON-COMBUSTIBLE PIPING REQUIRED IN WALL AT HOODS.

B. THIS CONTRACTOR IS TO BECOME INFORMED OF THE EXACT DIMENSIONS OF FINISHED WORK WHERE PIPES ARE TO BE PLACED AND WILL ARRANGE THE WORK ACCORDINGLY, ASSUMING ALL RESPONSIBILITY FOR PROPER LOCATION. IN THE ERECTION OF THE MAINS, SPECIAL CARE SHALL BE USED PROVIDING SUPPORT AND PROPER ALLOWANCES SHALL BE MADE FOR EXPANSION.

C. ALL PIPE LINES MUST BE PROVIDED WITH A SUFFICIENT NUMBER OF FITTINGS OR UNIONS TO MAKE POSSIBLE DISASSEMBLY WITHOUT BREAKAGE OF FITTINGS.

D. ALL EXPOSED PIPING SHALL BE NEAT AND CAREFULLY ALIGNED WITH THE STRUCTURAL ELEMENTS OF THE BUILDING. NO OFFSETS OR OBLIQUE BENDS WILL BE PERMITTED. DRAWINGS ARE DIAGRAMMATIC AND SHOULD NOT BE USED FOR LAYOUT WORK.

E. ALL LOW POINTS IN WATER PIPING TO HAVE DRAIN VALVES WITH STANDARD HOSE ATTACHMENTS. HOT AND COLD WATER PIPING IS TO PITCH TOWARD THE NEAREST DRAIN VALVE.

F. ALL PIPES TO BE INSTALLED SHALL BE LOCATED AT SUFFICIENT DISTANCE FROM WALLS, OTHER PIPES, CONDUIT, DUCTWORK AND OTHER OBSTACLES TO AVOID INTERFERENCE AND TO PERMIT THE APPLICATION OF FULL THICKNESS OF INSULATION SPECIFIED.

G. MECHANICAL JOINT TYPE PIPING SHALL BE INSTALLED PER MANUFACTURER'S RECOMMENDATIONS. THERMOMETERS BY TRERICE, ASHCROFT, MARSHALLTOWN, AND WEISS ARE ACCEPTABLE.

221116 PLUMBING SYSTEMS

A. SANITARY BUILDING DRAIN, SOIL, WASTE AND VENT LINES SHALL BE SERVICE WEIGHT CAST IRON HUBLESS PIPE WITH STAINLESS STEEL AT COUPLINGS. SCHEDULE 40 PVC MAY BE USED FOR SANITARY WASTE AND VENT PIPING IF CEILING SPACE IS NOT USED AS A RETURN AIR PLENUM. TYPE NO. S1110-4 MAY BE USED IN LIEU OF FIELD FABRICATED FLASHINGS.

B. VENT STACKS SHALL EXTEND THROUGH THE BUILDING, TERMINATING 12" ABOVE THE ROOF. STANDARD FLASHING SHALL BE EXTENDED 12" IN ALL DIRECTIONS FROM THE VENT TERMINAL AND TURNED DOWN INTO VENT. FLASHING UNITS AS MADE BY STONEMAN CAULK TYPE NO. S1110-4 MAY BE USED IN LIEU OF FIELD FABRICATED FLASHINGS.

C. HORIZONTAL RUNS SHALL BE GIVEN AS STEEP A PITCH TOWARD THE OUTLET AS CONDITIONS WILL PERMIT BUT NOT LESS THAN 1/8" PER FOOT.

D. FULL "Y" BRANCH FITTINGS AND EXTENSION WITH BRASS NIPPLES AND FINISHED SCREW PLUGS FOR CLEANOUTS SHALL BE PLACED IN ACCESSIBLE POSITIONS AT ENDS OF HORIZONTAL LINES OF PIPE AND AT FOOT OF ALL VERTICAL LINES OF PIPE OR ELSEWHERE, AS MAY BE REQUIRED BY THE CODE.

E. WHERE CLEANOUTS OCCUR IN FINISHED AREAS, THEY SHALL BE RECESSED AND COVERS TO BE FLUSH WITH THE FLOOR OR WALL.

F. HOT AND COLD WATER PIPING, ABOVE GROUND, SHALL BE TYPE "L" HARD COPPER TUBE WITH SOLDER FITTINGS. EXPOSED PIPING AT FIXTURES SHALL BE CHROME PLATED BRASS.

G. ALL COPPER TUBING SHALL HAVE SWEAT JOINTS AND BE CLEAN OF SCALE AND FOREIGN MATTER BEFORE INSTALLATION. ALL ENDS OF TUBING TO BE SWEATED SHALL BE REAMED, CLEANED AND BURNISHED TO REMOVE DIRT AND OXIDE. HARD 95-5 LEAD-FREE SOLDER SHALL BE USED AND APPLIED TO THE JOINTS ACCORDING TO STANDARD PRACTICE AND/OR MANUFACTURER'S RECOMMENDATIONS. SUITABLE ADAPTERS SHALL BE USED AT CONNECTION TO EQUIPMENT.

H. EACH HOT AND COLD WATER BRANCH SHALL BE PROVIDED WITH A GATE VALVE SHUT-OFF.

I. GREASE INTERCEPTOR - SHALL BE AS SPECIFIED ON DRAWINGS.

221118 GAS PIPING

A. ASTM A-53 SCHEDULE 40 STEEL PIPE PAINTED WITH YELLOW ANTI-CORROSIVE PAINT, SCREWED OR WELDED IN ACCORDANCE WITH CODE REQUIREMENT (FITTINGS FOR LINES LARGER THAN 2" SHALL BE WELDED STEEL. FITTINGS FOR LINES 2" AND SMALLER, EXCEPT WHEN LOCATED IN AIR PLENUMS, SHALL BE SCREWED. STANDARD WEIGHT BLACK MALLEABLE). NO VALVES ARE TO BE LOCATED IN AIR PLENUMS.

B. GAS COCK'S 1-1/2" AND SMALLER SHALL BE ALL BRONZE, SCREWED, FLAT HEAD, BRASS PLUG AND WASHER 200 LB. NOG. PROVIDE LINE SIZE 6" LONG DIRT LEG DOWN STREAM OF GAS COCK AT ALL EQUIPMENT CONNECTIONS.

C. PROVIDE AND INSTALL THE NATURAL GAS MANIFOLD FOR COOKING EQUIPMENT WHEN NATURAL GAS IS USED FOR FRYERS.

D. ALL EQUIPMENT SHALL SHALL BE CONNECTED WITH RIGID PIPING AS SPECIFIED ABOVE, FLEXIBLE CONNECTORS ARE NOT ACCEPTABLE.

E. PROVIDE UNION AT ALL EQUIPMENT CONNECTIONS.

F. PROVIDE GAS PIPE SUPPORTS IN ACCORDANCE WITH CODE REQUIREMENTS.

221120 DRAIN PIPING

A. FURNISH AND INSTALL A GRAVITY DRAIN PIPING SYSTEM FROM WATER HEATER, TERMINATING AT THE MOP SINK.

B. PIPING IS TO BE SCHEDULE 40 PVC WITH DRAINAGE PATTERN FITTINGS, BONDED ACCORDING TO THE MANUFACTURERS RECOMMENDATIONS.

C. PIPING IS TO BE SECURED TO PIPE HANGERS, USING PROPER SPACING AND THE APPROPRIATE HEIGHT TO ALLOW THE PIPE TO PITCH PROPERLY.

223300 WATER HEATER

ELECTRIC WATER HEATERS:

A. PROVIDE WATER HEATER, SIZE, LOCATION AND CAPACITY AND MANUFACTURER AS INDICATED ON THE DRAWINGS.

B. TANK TYPE ELECTRIC WATER HEATER WITH GLASS-LINED TANK RATED AT 150 PSI WORKING PRESSURE, MAGNESIUM ANODE PROTECTION, BRONZE DRAIN VALVE, HIGH TEMPERATURE CUT-OFF SWITCH AND IMMERSION THERMOSTAT. TANK TO HAVE A MINIMUM R-VALUE OF 10.

C. FURNISH AND INSTALL A WATTS NO. 40L, 3/4" TEMPERATURE AND PRESSURE RELIEF VALVE AND EXTEND DISCHARGE PIPE, FULL SIZE, TO WITHIN 6" ABOVE THE MOP SINK OR FLOOR DRAIN.

D. PROVIDE AMTROL EXPANSION TANK AS SIZED ON THE DRAWINGS. EQUAL PRODUCTS BY BELL AND GOSSETT OR ADAMSON MAY BE PROVIDED AT THE CONTRACTOR'S OPTION.

FUEL FIRED WATER HEATERS

A. FURNISH AND INSTALL HIGH EFFICIENCY, 96% THERMAL EFFICIENCY OR BETTER, GAS FIRED, STORAGE WATER HEATER, SIZE, LOCATION AND CAPACITY AS INDICATED ON THE DRAWINGS.

B. WATER HEATER SHALL BE RHEEM RUUD WITH INTELLIGENT CONTROL SYSTEM/LCD DISPLAY. EQUAL HEATERS BY A.O. SMITH, OR LOCHINVAR MAY BE FURNISHED AT THE CONTRACTOR'S OPTION.

C. TANK TYPE GAS FIRED WATER HEATER WITH GLASS-LINED TANK RATED AT 150 PSI WORKING PRESSURE, POWERED ANODES PROTECTION, BRONZE DRAIN VALVE. TANK TO HAVE A MINIMUM R-VALUE OF 10.

D. FACTORY-INSTALLED TEMPERATURE AND PRESSURE RELIEF VALVE. EXTEND DISCHARGE PIPE, FULL SIZE, TO WITHIN 6" ABOVE THE MOP SINK OR FLOOR DRAIN.

E. PROVIDE WATTS, POTABLE WATER EXPANSION TANK AS SIZED ON THE DRAWINGS. EQUAL PRODUCTS BY AMTROL BELL & GOSSETT MAY BE PROVIDED AT THE CONTRACTOR'S OPTION.

224000 PLUMBING FIXTURES AND EQUIPMENT

A. WATER CLOSETS AND LAVATORIES SHALL BE VITREOUS CHINA AND SHALL ALL BE BY THE SAM MANUFACTURER.

B. ALL WALL HUNG LAVATORIES, FLUSH VALVES, ETC., SHALL BE PER DRAWINGS AND MOUNTED AT THE MANUFACTURER'S RECOMMENDED ROUGHING IN MEASUREMENTS, UNLESS NOTED OTHERWISE.

C. VALVES TO BE AS FOLLOWS:

125 LB. S.W.P. GATE, GLOBE AND CHECK VALVES:

1. GATE (2-1/2" AND SMALLER) - ALL BRONZE, SCREWED, TAPERED, SOLID WEDGE DISC, SCREWED BONNET, RISING STEM.
2. BALL (2-1/2" AND SMALLER) - ALL BRONZE, TEFLON STEM SEALS AND SEAT, 1/4 TURN SHUT-OFF, VINYL COVERED HANDLES.
3. GLOBE (2-1/2" AND SMALLER) - ALL BRONZE, SCREWED, TAPERED, SOLID WEDGE DISC, SCREWED BONNET, RISING STEM.
4. CHECK (2-1/2" AND SMALLER) - ALL BRONZE, SCREWED, HORIZONTAL SWING CHECK WITH BRONZE DISC.

C. VALVES SHALL BE MILWAUKEE. EQUAL PRODUCTS BY CRANE, HAMMOND, POWELL, WALWORTH, NORTHERN INDIANA BRASS COMPANY OR STOCKHAM MAY BE FURNISHED AT THE CONTRACTOR'S OPTION.

D. UNIONS TO BE AS FOLLOWS:

1. UNIONS FOR COPPER PIPE TO BE 150LB., ALL BRONZE, SOLDER END TYPE BY CHASE. EQUAL PRODUCTS BY CRANE, MUELLER OR NORTHERN INDIANA BRASS COMPANY MAY BE FURNISHED AT THE CONTRACTOR'S OPTION.
2. DIELECTRIC UNIONS BETWEEN FERROUS AND COPPER SHALL BE INSULATED TO PREVENT METAL-TO-METAL CONTACT AND SHALL BE MANUFACTURED BY CAPITAL MANUFACTURING COMPANY OF COLUMBUS, OHIO. EQUAL PRODUCTS BY PATROL OR PECO SALES COMPANY.

E. CLEANOUTS TO BE AS FOLLOWS:

1. FLOOR TYPE TO BE ADJUSTABLE CAST IRON WITH NICKEL BRONZE TOP. TOP TO BE FLUSH WITH FLOOR. SEE DRAWINGS FOR MODEL AND MANUFACTURER.
2. WALL TYPE TO BE CAST IRON TEE WITH ROUND POLISHED STAINLESS STEEL ACCESS COVER AND THREADED PLUG. SEE DRAWINGS FOR MODEL AND MANUFACTURER.

F. FLOOR DRAINS TO BE AS FOLLOWS:

1. CAST IRON BODY SHALLOW SUMP DRAIN WITH DOUBLE DRAINAGE FLANGE AND WEEPHOLES, FLASHING CLAMP, BOTTOM OUTLET WITH NEOPRENE GASKET INSIDE CONNECTOR, 6" DIAMETER ADJUSTABLE GRATE. FRAME AND GRATE TO HAVE POLISHED NICKEL-BRONZE FINISH. SEE DRAWINGS FOR MODEL AND MANUFACTURER. EQUAL PRODUCT MAY BE SUPPLIED AT THE CONTRACTOR'S OPTION.

SITE NUMBER:	12281
BASE MDL:	SMART 55 - SQUARE 2017
ASSET TYPE:	FRANCHISEE
CLASSIFICATION:	NEW
OWNER:	WENSPOK
BASE VERSION:	2017
UPGRADE CLASSIFICATION:	NEW BUILD
PROJECT YEAR:	2020
FURNITURE PACKAGE:	2016 V3
DRAWING RELEASE	JANUARY 2020

Russell C. Page
ARCHITECTS
204 N. Division Street, Suite 'E'
Spokane, WA 99202
(509) 467-9748 Fx: (509) 467-9817

PROJECT TYPE: NEW SMART 55 SQE

Wendy's
HIGHWAY 95
PONDERAY, ID 83852

REV.	DATE	DESCRIPTION
△		
△		

ISSUE DATE: 5-28-2020
PROJECT NUMBER: 20-113
DRAWN BY: MEAuthor
CHECKED BY: Checker

SEAL
LICENSED ARCHITECT AR 984311
8/10/20
RUSSELL C. PAGE
STATE OF IDAHO

SHEET NAME
PLUMBING SPECIFICATIONS

SHEET NUMBER
P5.0

N:\Home\20-113 WENDYS PONDERAY\60_SMART-1.0-55-SQUARE_P5_0_Plumbing Specifications.dwg, user

AIR FLOW SCHEMATIC

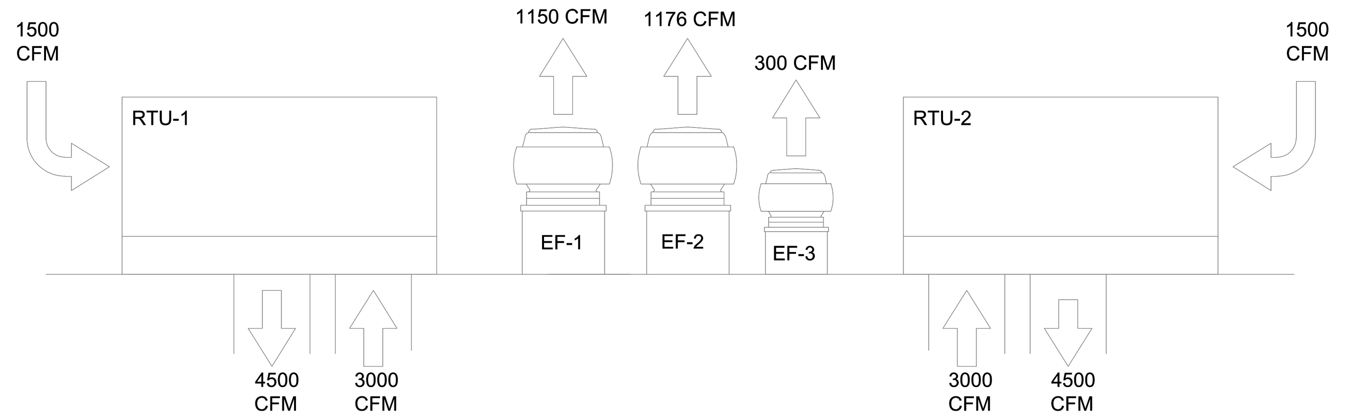

AIR BALANCE SCHEDULE

MARK	SUPPLY AIR	RETURN AIR	EXHAUST AIR	OUTSIDE AIR	RESULTING PRESSURE
EF-1			1150 CFM		-1150
EF-2			1176 CFM		-1176
EF-3			300 CFM		-300
RTU-1	4500 CFM	3000 CFM		1500 CFM	+1500
RTU-2	4500 CFM	3000 CFM		1500 CFM	+1500
AIR BALANCE REPORT REQUIRED. SEE SPECIFICATIONS.					+374 CFM

HVAC BIDDING AND EQUIPMENT NOTES

FOR QUOTATION ON THE FOLLOWING EQUIPMENT REFER TO APPROVED VENDORS LIST ON SHEET G2.1

EQUIPMENT PACKAGE:
RTU-1 AND RTU-2 WITH ACCESSORIES AND CURBS :
GENERAL CONTRACTOR TO CONTACT APPROVED VENDOR ON SHEET G2.1 FOR PRICING INFORMATION. IF DESIGN CONDITIONS DIFFER FROM THOSE LISTED, CONTACT SUPPLIER FOR APPROPRIATE EQUIPMENT.

HOODS, FANS AND FAN CURBS PACKAGE:
GENERAL CONTRACTOR TO CONTACT APPROVED VENDOR ON SHEET G2.1 FOR PRICING INFORMATION. ALL CURBS ARE TO BE INSULATED AND TO COMPLY WITH NFPA 96 REQUIREMENTS FOR HEIGHT. CURBS PROVIDED FOR EF-1 AND EF-2 MUST BE HINGED AND CHAINED

AIR DISTRIBUTION PACKAGE:
PACKAGE TO INCLUDE SCHEDULED AIR DEVICES AND ACCESSORIES. EQUIPMENT AND MATERIAL PACKAGES ARE IN STOCK AND SHOULD BE ORDERED IMMEDIATELY UPON RECEIPT OF HVAC CONTRACT TO AVOID CONSTRUCTION DELAY. CONTACT HJC CONSOLIDATOR FOR DIFFUSER PACKAGE.

CODED NOTES:

1. INSTALL GREASE EXHAUST HOOD. SUPPORT HOOD PER MANUFACTURER'S INSTALLATION INSTRUCTIONS. TRANSITION FROM HOOD COLLAR TO DUCT SIZE SHOWN AND EXTEND 16 GAGE CARBON STEEL GREASE EXHAUST DUCTWORK WELDED LIQUID TIGHT UP TO EXHAUST FAN. WRAP GREASE DUCT WITH COMPOSITE GREASE DUCT ENCLOSURE ASSEMBLY PER HVAC SPECIFICATIONS. INSTALL EXHAUST DUCT WRAP PER MANUFACTURER'S INSTRUCTIONS. PROVIDE "FASTDOOR XL" GREASE DUCT CLEANOUT ACCESS DOORS (C.O.D) MANUFACTURED BY THERMAL CERAMICS (OR EQUIVALENT) AT EVERY CHANGE OF DIRECTION IN THE DUCT AND EVERY 10 FEET. PROVIDE MINIMUM 3 FEET CLEARANCE IN FRONT OF ACCESS DOORS. INSULATE ACCESS DOORS TO MAINTAIN RATINGS OF GREASE DUCT ENCLOSURE PER FIRE PROTECTION INSULATION MANUFACTURER'S INSTRUCTIONS.
2. PROVIDE COMBINATION AUDIO/VISUAL ALARM AND REMOTE TEST STATION (SYSTEM SENSOR RTS2). MOUNT 54" ABOVE FINISHED FLOOR AND PROVIDE LABEL NAMEPLATE WITH ½ HEIGHT LETTERING (BLACK ON WHITE) FOR WHICH UNIT IT MONITORS. INSTALLATION SHALL MEET ALL CRITERIA AS PRESCRIBED IN NFPA 90A AND NFPA 72.
3. PROVIDE ROOFTOP UNIT AND CURB COORDINATED WITH STRUCTURE. SHIM UNIT AND CURB LEVEL FOR PROPER CONDENSATE DRAINAGE. PROVIDE FLEXIBLE CONNECTORS ON SUPPLY AND RETURN AIR DUCT CONNECTIONS. TRANSITION TO DUCT SIZES SHOWN. SECURE EQUIPMENT TO CURBS PER MANUFACTURER'S RECOMMENDATIONS AND AS DETAILED.
4. INSTALL THERMOSTATS AND REMOTE SENSORS. THERMOSTATS AND REMOTE SENSORS ARE FURNISHED WITH FAN LIGHTING CONTROL PANEL SYSTEM. CONTRACTOR IS RESPONSIBLE FOR WIRING AND INSTALLING REMOTE SENSORS WHERE INDICATED ON DRAWINGS. MOUNT SENSOR 60" A.F.F. IN CUSTOMER AREA AND ON WALL AS INDICATED AT 72" A.F.F. IN KITCHEN AREA.
5. PROVIDE DUCT MOUNTED SMOKE DETECTOR AND SENSING TUBE, AND INTERLOCK TO SHUT DOWN ROOFTOP UNIT ON DETECTION OF SMOKE. SMOKE DETECTOR SHALL BE SYSTEM SENSOR INNOVAIR FLEX D4240 4-WIRE PHOTOELECTRIC.
6. PROVIDE CURB AND ROOF MOUNTED EXHAUST FAN. ENSURE THAT TOP OF EXHAUST FAN IS AT LEAST 40" ABOVE ROOF SURFACE.
7. RISE/RUN DUCT UP IN JOIST SPACE WITH RADIUS ELBOW FOR CLEARANCE BEFORE DROPPING DOWN TO AIR DEVICE.
8. BELLMOUTH FITTING WITH MANUAL BALANCE DAMPER (TYP). DAMPER SHALL BE INSTALLED SO THAT REGULATOR IS FULLY ACCESSIBLE.
9. PROVIDE HUMIDITY SENSOR. INSTALL AT 60" A.F.F.
10. CENTERLINE OF DOWNWARD FACING DIFFUSER TO BE 30° BELOW THE AXIS OF THE DUCT. SEE SHEET M1.2 FOR DETAIL.
11. PROVIDE CURB AND ROOF MOUNTED EXHAUST FAN.
12. TRANSITION FROM CAPTURE JET FAN INLET ON TOP OF HOOD TO DUCT SIZE SHOWN AND EXTEND DUCTWORK TO GRILLE AS SHOWN ON PLAN. DUCTWORK AND GRILLE STATIC PRESSURE LOSS SHALL NOT EXCEED 0.25" W.C.

GENERAL NOTES

1. PROVIDE WARRANTY TO INCLUDE LABOR AND MATERIALS TO REPAIR OR REPLACE DEFECTIVE PARTS AND MATERIALS AS REQUIRED FOR ONE YEAR AFTER SUBSTANTIAL COMPLETION OR OWNER ACCEPTANCE OF THE COMPLETED PROJECT, WHICHEVER IS LATER.
2. COMPLETED INSTALLATION SHALL CONFORM TO ALL APPLICABLE LOCAL, STATE, AND FEDERAL CODES AND ORDINANCES, INCLUDING NFPA-90A, NFPA-96 AND NFPA-101.
3. ALL DUCTWORK SHALL BE MANUFACTURED AND INSTALLED PER SMACNA GUIDELINES AND DETAILS. DUCTWORK SIZES SHOWN INDICATE INSIDE CLEAR DIMENSIONS. ALL CONCEALED DUCTWORK SHALL BE INSULATED WITH 2" THICK DUCT WRAP (R-8 MIN). INSULATE ALL CEILING MOUNTED DIFFUSER BACKS. VAPOR BARRIER SHALL BE MAINTAINED CONTINUOUS AND ALL SEAMS SHALL BE SEALED. ALL DUCTWORK SHALL BE INSTALLED ABOVE SUSPENDED CEILING WHERE PROVIDED. ALL EXPOSED DUCTWORK SHALL BE G90 GALVANIZED STEEL.
4. CONNECT ALL DUCTS TO FANS AND OTHER AIR DISTRIBUTION EQUIPMENT USING MECHANICAL FASTENERS WITH SEALS, MASTIC OR GASKETS.
5. SUPPLY AND RETURN AIR DUCT DROPS FROM ROOFTOP UNITS SHALL BE ISOLATED FROM UNIT VIBRATION WITH FLEXIBLE DUCT CONNECTORS.
6. INSULATED FLEXIBLE DUCT MAY BE USED IN MAXIMUM LENGTHS OF 6'-0" FROM RIGID METAL DUCT TO DIFFUSER CONNECTION. FLEXIBLE DUCT SHALL BE CLASS 1 FLEXIBLE AIR DUCT WITH INSULATION AND VAPOR BARRIER.
7. SPIN-IN FITTING WITH DAMPER SHALL BE FLEXAIRE RF OR METALAIRE MBSD, TYPICAL OF ALL BRANCH DUCT RUNS.
8. CONTRACTOR SHALL RECEIVE AND INSTALL ROOF MOUNTED CONDENSING UNITS. PROVIDE MOUNTING RAILS. REFER TO STRUCTURAL PLANS FOR LOCATIONS OF ROOF MOUNTED EQUIPMENT, CURB, AND RAIL DETAILS.
9. ALL CURBS SHALL BE ONE PIECE WELDED AND INSULATED 18ga. STEEL, WITH RIGID INSULATION GLUED TO INSIDE OF CURB.
10. RETURN DUCTWORK FROM ROOFTOP UNITS SHALL BE LINED WITH 1" INSULATION.
11. PROVIDE STENCIL LABELS ON ROOFTOP UNITS AND EXHAUST FANS. LABELS SHALL HAVE 2" HIGH LETTERS ON UNIT SIDE ACCESS PANEL. ALL EXPOSED GAS PIPING AND FITTINGS SHALL BE PAINTED WITH SAFETY YELLOW PAINT DESIGNED FOR BLACK IRON.
12. ENSURE ALL GAS LINES AND CONDENSATE DRAIN LINES DO NOT IMPEDE RTU DOORS/PANELS. FOLLOW MANUFACTURER GUIDELINES FOR REQUIRED CLEARANCES.
13. REFER TO "H" AND "W" SHEETS IN SET FOR SPECIFIC HOOD AND FAN INFORMATION AND FIELD WIRING DIAGRAMS. CONTRACTOR SHALL PROVIDE LOW VOLTAGE WIRING FROM FAN CONTROL PANEL TO ROOFTOP UNITS, REMOTE SENSORS AND SMOKE DETECTORS. CONTRACTOR SHALL PROGRAM THERMOSTAT FOLLOWING WENDY'S STANDARDS. REFER TO PROGRAMMING INSTRUCTIONS PROVIDED WITH MODULAR PANEL SYSTEM.
14. CONTRACTOR SHALL TEST, CHECK, AND BALANCE ALL ROOFTOP UNITS, EXHAUST HOODS, AND EXHAUST FANS. SET ALL EXHAUST FANS AND DIFFUSERS TO SPECIFIED CFMS. CONTRACTOR SHALL COMPLETE WENDY'S REQUIRED TEST FORMS FOR ROOFTOP UNITS, HOODS, AND FAN CONTROL SYSTEM.
15. CONTRACTOR SHALL COMPLETE ROOFTOP UNIT STARTUP FORMS AND RETURN TO MANUFACTURER TO SCHEDULE EQUIPMENT OPERATION CHECK (EOC). CONSULT CONTACT OR ALLOW 5 BUSINESS DAYS TO SCHEDULE EOC. CONTRACTOR IS RESPONSIBLE FOR CORRECTING DEFICIENCIES NOTED IN THE EOC PRIOR TO START OF TESTING AND BALANCING.
16. CONTRACTOR SHALL VERIFY THAT BUILDING IS WEATHER TIGHT, ROOFTOP UNITS POWERED AND CALIBRATED, THERMOSTATS PROGRAMMED, FANS OPERATIONAL, EOC COMPLETE, DIFFUSERS AND CEILING TILE INSTALLED, EXHAUST FAN SPEEDS CALIBRATED, AND NEW FILTERS INSTALLED IN ROOFTOP UNITS PRIOR TO TESTING AND BALANCING. CONTRACTOR SHALL CORRECT OPERATIONAL OR PERFORMANCE DEFICIENCIES FOUND DURING TESTING AND BALANCING.
17. KITCHEN EQUIPMENT DISTRIBUTORS SHALL INSTALL REFRIGERANT PIPING FOR ROOF MOUNTED CONDENSING UNITS TO FOOD SERVICE EQUIPMENT INCLUDING THERMOSTATIC EXPANSION VALVES, SOLENOID VALVE, TEMPERATURE CONTROL WIRING, SIGHT GLASS, FILTER DRIERS, PRESSURE CONTROLS, CRANKCASE HEATERS, LOW AMBIENT CONTROLS, AND WEATHERPROOF HOUSINGS. TRAP AND SLOPE CONDENSATE LINES PER MANUFACTURER'S RECOMMENDATIONS. PROVIDE HEAT TRACING ON CONDENSATE LINES INSIDE FREEZER. CONTRACTOR SHALL PROVIDE PIPE CURB ASSEMBLY FOR ROOF PENETRATIONS. REFER TO ARCHITECTURAL ROOF PLAN FOR ADDITIONAL INFORMATION AND DETAILS FOR PIPE CURB ASSEMBLY AND RAIL INSTALLATION.
18. COMPLETE SMOKE CAPTURE TEST(S), AS REQUIRED, IN ACCORDANCE WITH INTERNATIONAL MECHANICAL CODE IMC 507, ASHRAE 154 VENTILATION FOR COMMERCIAL COOKING OPERATIONS, AND HOOD MANUFACTURER STANDARDS. KITCHEN EQUIPMENT SHALL BE AT OPERATING TEMPERATURES WITH RTUS OPERATIONAL. TEST USING SMOKE CANDLES OR SMOKE PUFFERS. SMOKE BOMBS SHALL NOT BE USED.
19. FOR ALL EQUIPMENT WITH SYMBOL TAGS ON PLANS, REFER TO ASSOCIATED EQUIPMENT SCHEDULES FOR REQUIREMENTS. ALL TAGGED EQUIPMENT IS THE RESPONSIBILITY OF THE CONTRACTOR TO PROVIDE UNLESS OTHERWISE NOTED.
20. CONTRACTOR IS RESPONSIBLE FOR PROVIDING MANUAL BALANCE DAMPERS IN ALL DUCT BRANCHES IN ACCESSIBLE LOCATION ABOVE CEILING.

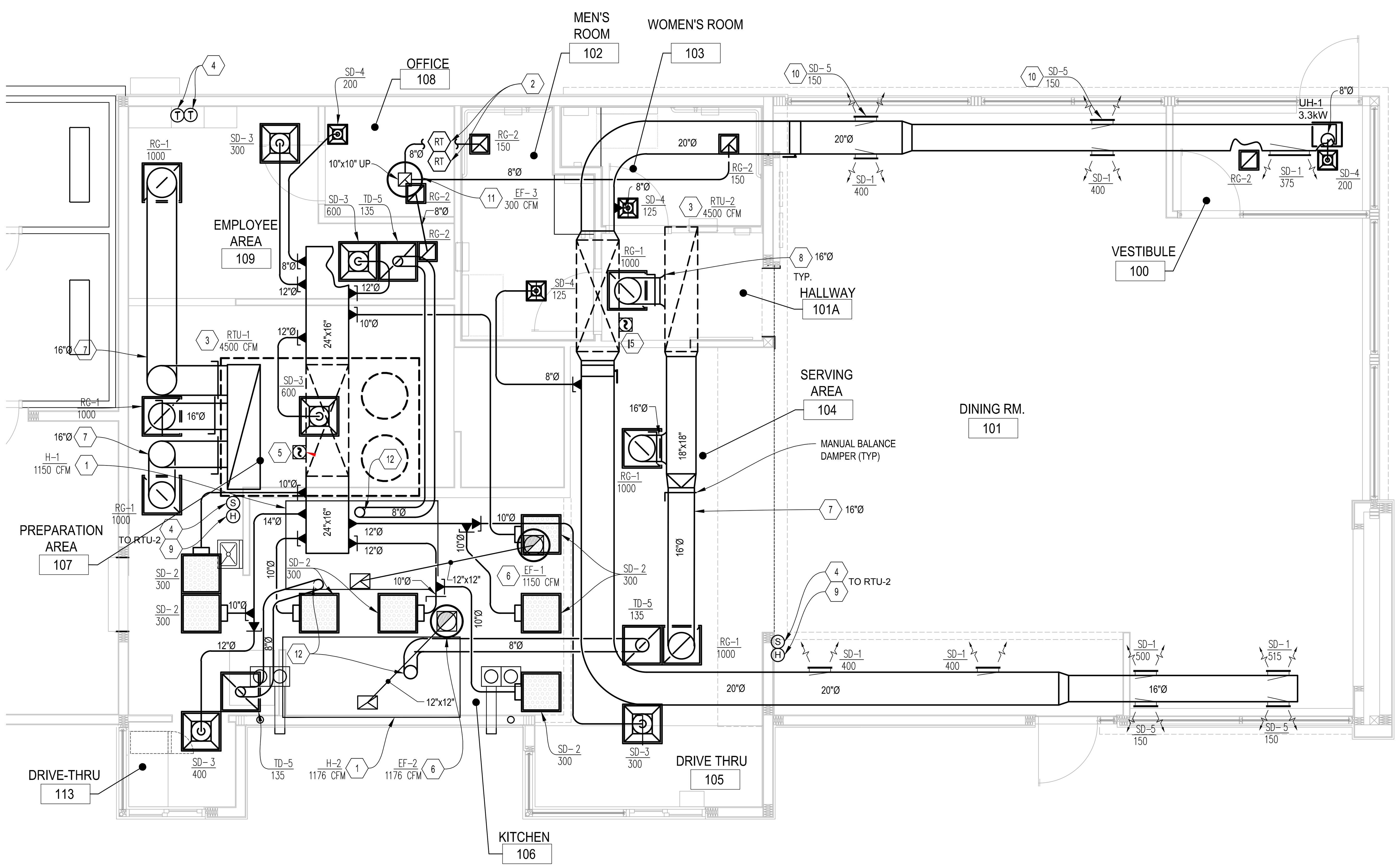

MECHANICAL PLAN 1
1/4" = 1'-0"

SITE NUMBER:	12281
BASE MDL:	SMART 55 - SQUARE 2017
ASSET TYPE:	FRANCHISEE
CLASSIFICATION:	NEW
OWNER:	WENSPOK
BASE VERSION:	2017
UPGRADE CLASSIFICATION:	NEW BUILD
PROJECT YEAR:	2020
FURNITURE PACKAGE:	2016 V3
DRAWING RELEASE	JANUARY 2020

Russell C. Page ARCHITECTS
204 N. Division Street, Suite 'E'
Spokane, WA 99202
(509) 467-9748 Fx: (509) 467-9817

PROJECT TYPE: NEW SMART 55 SQE

Wendy's®
HIGHWAY 95
PONDERAY, ID 83852

REV.	DATE	DESCRIPTION
△		
△		

ISSUE DATE: 5-28-2020
PROJECT NUMBER: 20-113
DRAWN BY: ME Author
CHECKED BY: Checker

SEAL
LICENSED ARCHITECT AR 984311
8/10/20
RUSSELL C. PAGE
STATE OF IDAHO

SHEET NAME
HVAC PLAN

SHEET NUMBER
M1.1

8/12/2020 12:36:42 PM N:\Home\20-113 WENDYS PONDERAY\70_SMART-1.0-55-SQUARE_M1-1_HVAC PLAN.dwg, user

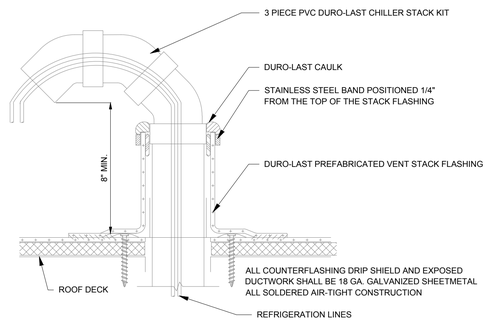

GOOSENECK WEATHERHOOD ROOF PENETRATION DETAIL (08)

NOT TO SCALE

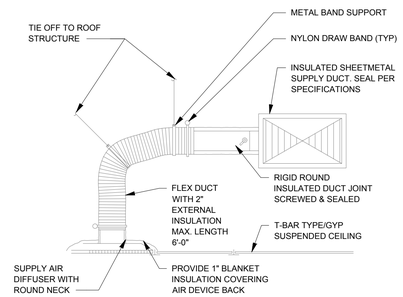

CEILING DIFFUSER DETAIL (06)

NOT TO SCALE

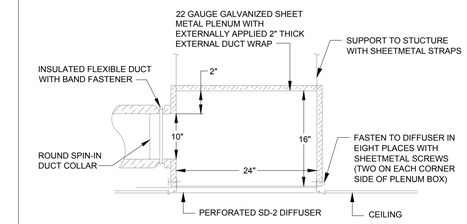

NOTES:
1. TOP INLETS TO PLENUM BOX ARE NOT ALLOWED.
2. DOVETAIL COLLARS ARE NOT ALLOWED.
3. SEAL COLLAR WITH SEAL CLASS 'A' DUCT SEALANT.
4. DO NOT CRUSH OR MODIFY DUMP BOX SIZE TO FIT OTHER MECHANICAL EQUIPMENT IN CEILING CAVITY.

DUMP BOX DETAIL (03)

NOT TO SCALE

NOTE: USE PLAN AS GUIDE TO FITTING TYPE.

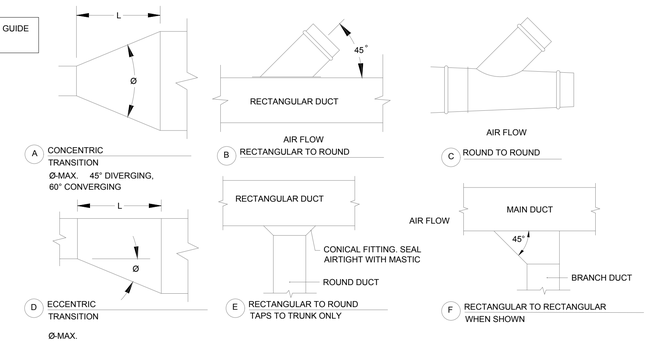

DUCT FITTING DETAILS (02)

NOT TO SCALE

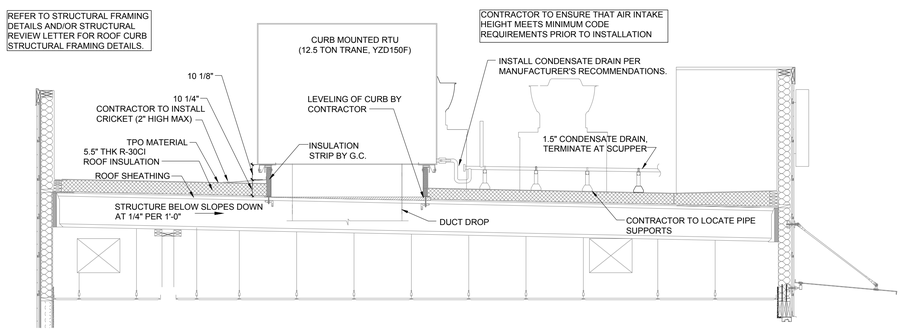

MECHANICAL HVAC SECTION (09)

NOT TO SCALE

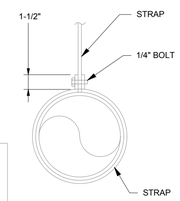

NOTE:
FOR DUCT SUPPORT AND SEISMIC REQUIREMENTS, REFER TO SMACNA GUIDELINES AND LOCAL CODE REQUIREMENTS.

ROUND DUCT HANGER DETAIL (05)

NOT TO SCALE

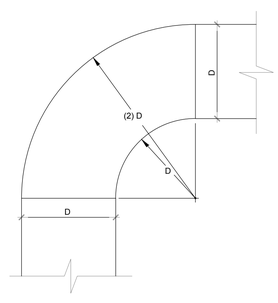

RADIUS ELBOW (04)

NOT TO SCALE

NO 90° BENDS IN GREASE DUCT ALLOWED UNLESS RADIUS ELBOWS WITH ACCESS PANELS ARE PROVIDED WITH CONSTRUCTION MANAGER APPROVAL.

CONTRACTOR TO PROVIDE AIR BALANCING IN DUCTWORK FOR ALL KITCHEN EXHAUST FANS.

DISCHARGE MINIMUM 40" ABOVE ROOF LINE. ENDING HEIGHT TO BE EVEN WITH TOP OF PARAPET WALL.

VENTED CURB AS SUPPLIED BY FAN MANUFACTURER

WEATHER PROTECTED OPENING.

LISTED ACCESS OPENING ROOF

MINIMUM 18" HIGH ROOF CURB

CO

6"

IN A SHAFT PROVIDE CLEARANCE REDUCTION METHOD WITH A 6" MINIMUM CLEARANCE.

PROVIDE ACCESSIBLE CLEANOUTS AT EVERY 90 DEGREE CHANGE IN DIRECTION, EVERY 12FT, EVERY FLOOR AND AT THE TOP OF A VERTICAL RISER UNDER ROOF AND ONLY ABOVE THE ROOF WHERE THERE IS AN INLINE FAN. WHERE CLEANOUTS ARE NOT ACCESSIBLE BY 10FT STEP LADDER A PERMANENT STRUCTURE MUST BE CONSTRUCTED. CLEANOUTS SHALL BE OF SAME MATERIAL AS DUCTWORK

CO

KITCHEN HOOD DUCTWORK SHALL BE 16 GAUGE CARBON STEEL OR 18 GAUGE STAINLESS STEEL. DUCTWORK SHALL BE CONTINUOUSLY EXTERNALLY WELDED LIQUID TIGHT. ALL PORTIONS OF WELDED DUCTWORK SHALL BE SLOPED BACK TO HOOD FOR DRAINAGE WITH NO TRAPS. CONTRACTOR SHALL COORDINATE AT SITE WITH TRADES TO ENSURE THIS CAN BE DONE.

OPERATION OF KITCHEN HOOD SHALL BE INTERLOCKED WITH ASSOCIATED EXHAUST FAN, MOTORIZED DAMPERS, ASSOCIATED UNITS BRINGING IN MAKE UP AIR AND ANY REMOTE APPLIANCE WHERE FLUE IS DISCHARGING INTO HOOD. UPON ACTIVATION OF FIRE SUPPRESSION SYSTEM, MAKE UP AIR SYSTEM AND ALL APPLIANCES WILL SHUT DOWN AND KITCHEN EXHAUST SYSTEM WILL CONTINUE TO OPERATE.

KITCHEN CEILING

18"

6'-6"

ALL GAS PIPING SHALL FOLLOW APPLICABLE GAS CODES AND BE INSTALLED BY A LICENSED CONTRACTOR FAMILIAR WITH THESE CODES.

CLEARANCE AND CLEARANCE REDUCTION METHODS
NFPA 96 1-3.2 CLEARANCE NOTE:
HOODS, GREASE EXTRACTORS, DUCTS, ECOLOGY UNITS, FANS SHALL HAVE A CLEARANCE OF AT LEAST:

18" TO COMBUSTIBLES
3" TO LIMITED COMBUSTIBLES, 6" IN SHAFT
0" TO NON COMBUSTIBLES, 6" IN SHAFT

WHERE SPACE DOES NOT ALLOW FOR NOTED CLEARANCES AS IT PERTAINS TO THE TYPE OF CONSTRUCTION, A CLEARANCE REDUCTION METHOD MAY BE APPLIED.
OPTION 1 : AS ILLUSTRATED BELOW
OPTION 2 : USE LISTED 3M FIRE DUCT WRAP 615+

PROVIDE AUTOMATICALLY ELECTRICALLY OPERATED GAS VALVE SERVING GAS FIRED COOKING EQUIPMENT BEING SERVED BY AUTOMATIC FIRE EXTINGUISHING SYSTEM. PROVIDE INTERLOCK SO THAT COOKING EQUIPMENT WILL SHUT-DOWN ON ACTIVATION OF FIRE SUPPRESSION SYSTEM. VALVE SHALL BE LABELED, WITH INSTRUCTIONS AND LOCATED OUTSIDE OF PROTECTED AREA. AN ADDITIONAL MANUAL SHUT-OFF VALVE SHALL BE ACCESSIBLE AND BE LOCATED IMMEDIATELY UPSTREAM OF AUTOMATIC VALVE.

EMERGENCY PULL STATION SHALL BE ACCESSIBLY LOCATED 42" TO 48" OFF FLOOR AT POINT OF EXIT DURING A FIRE. SEE POWER PLAN FOR LOCATION.

PROVIDE MAIN GAS VALVE TO SHUT DOWN COOK LINE. LOCATE VALVE NEAR COOK LINE SO EMPLOYEE CAN MANUALLY SHUT DOWN WITHOUT HAVING TO USE LADDER, ETC.

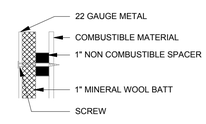

SITE NUMBER:	12281
BASE MDL:	SMART 55 - SQUARE 2017
ASSET TYPE:	FRANCHISEE
CLASSIFICATION:	NEW
OWNER:	WENSPOK
BASE VERSION:	2017
UPGRADE CLASSIFICATION:	NEW BUILD
PROJECT YEAR:	2020
FURNITURE PACKAGE:	2016 V3
DRAWING RELEASE	JANUARY 2020

Russell C. Page ARCHITECTS
204 N. Division Street, Suite 'E'
Spokane, WA 99202
(509) 467-9748 Fx: (509) 467-9817

PROJECT TYPE: NEW
SMART 55 SQE

Wendy's®
HIGHWAY 95
PONDERAY, ID 83852

REV.	DATE	DESCRIPTION
△		
△		

ISSUE DATE: 5-28-2020
PROJECT NUMBER: 20-113
DRAWN BY: MR Author
CHECKED BY: Checker

SEAL

LICENSED ARCHITECT AR 984311
5/14/20
RUSSELL C. PAGE
STATE OF IDAHO

SHEET NAME
HVAC DETAILS

SHEET NUMBER
M2.0

8/20/2020 12:12:50 PM K:\Home\20-113 WENDY'S PONDERAY\70_SMART-1.0-55-SQUARE_M2-0_HVAC DETAILS.dwg, user

H.V.A.C. SYSTEM DESIGN:
OUTSIDE AIR TEMPERATURE: 88°F SUMMER, -4°F WINTER

HVAC EQUIPMENT SCHEDULE

MFR*	UNIT	MODEL NO.	TONS	S/A FAN HP	S/A FAN CFM	S/A FAN SP	VOLT	HEATING INPUT	HEATING OUTPUT	TOTAL COOLING	MOCP	O.F.A. C.F.M.	EER	NOTES
CARRIER ELECT HEAT	RTU-1	50LCFA14	12.5	3	4500	.75	208/3/60	36 KW	123 MBH	146.0 MBH	175	1500	12.4	1-8,10-14
	RTU-2	50LCFA14	12.5	3	4500	.75	208/3/60	36 KW	123 MBH	146.0 MBH	175	1500	12.4	1-8,10-14
CARRIER GAS HEAT	RTU-1	48LCTA14	12.5	3	4500	.75	208/3/60	248/310	200/251	146.0 MBH	100	1500	12.4	1-14
	RTU-2	48LCTA14	12.5	3	4500	.75	208/3/60	248/310	200/251	146.0 MBH	100	1500	12.4	1-14

ROOFTOP UNITS ARE TO BE COMPLETE WITH THE FOLLOWING:

1. FACTORY CURBS FOR CONTRACTOR TO INSTALL. CURB HEIGHTS SHALL PROVIDE FOR LOCAL SNOW ACCUMULATION. CURBS SHALL BE 14 INCHES HIGH MINIMUM. CONTRACTOR TO CONFIRM CURB HEIGHTS AND STRENGTH WITH STRUCTURAL ENGINEER TO CONFORM TO LOCAL SNOW ACCUMULATION, SEISMIC AND WIND LOADS, INCLUDING FASTENER CONSTRUCTION AND INSTALLATION METHODS.
2. FACTORY MOUNTED AND WIRED NON-FUSED DISCONNECT.
3. WEATHER HOOD WITH BIRD SCREEN AT UNIT OUTDOOR AIR INLET.
4. SET MINIMUM OUTDOOR AIR AS SPECIFIED ABOVE. OUTDOOR AIR DAMPER SHALL FULLY CLOSE ON UNIT SHUTDOWN.
5. SINGLE ZONE VARIABLE AIR VOLUME CONTROL WITH OUTDOOR AIR CFM COMPENSATION.
6. PROVIDE AN ELECTRONIC CONDENSATE CONTROL SYSTEM IN DRAIN PAN OF UNIT. INTERLOCK UNIT WITH CONDENSATE CONTROL SYSTEM TO SHUT DOWN UNIT IN EVENT OF CONDENSATE BACK-UP IN DRAIN PAN. CONDENSATE CONTROL SYSTEM SHALL BE THE WATER GUARD CONTROL SYSTEM OR APPROVED EQUAL.
7. OUTDOOR AIR ECONOMIZER WITH SINGLE ENTHALPY CONTROL AND ECONOMIZER FAULT DETECTION AND DIAGNOSTICS, BAROMETRIC RELIEF DAMPER (OR POWERED RELIEF IF REQUIRED BY THE AHJ).
8. FACTORY INSTALLED NON POWERED CONVENIENCE OUTLET.
9. FACTORY INSTALLED STAINLESS STEEL HEAT EXCHANGER, 2 STAGE GAS BURNER AND SUPPLY AIR TEMPERING SYSTEM
10. CARRIER I-VU EQUIPMENT TOUCH SCREEN (EQT1-4-CAR), WITH REMOTE TEMPERATURE/HUMIDITY SENSORS BUILT INTO THE MODULAR PANEL SYSTEM WITH FAN/LIGHTING CONTROL.
11. FACTORY INSTALLED 3 STAGE HUMIDIMIZER.
12. LOUVERED CONDENSER COIL HAIL GUARD.
13. SUBMITTAL REVIEW AND APPROVAL REQUIRED. CARRIER CONTACT INFORMATION: CARRIER STRATEGIC ACCOUNTS - FOR QUESTIONS OR QUOTATIONS CONTACT DEBORAH.ROY-JONES@CARRIER.UTC.COM, 315.432.7941. FOR GENERAL ACCOUNT NEEDS PLEASE CONTACT MATT. MURPHY@CARRIER.UTC.COM, 630.235.1615
14. REFER TO DRAWINGS G2.1 FOR MANUFACTURER CONTACT INFORMATION.

SUBMITTAL REVIEW AND APPROVAL REQUIRED.
CARRIER CONTACT INFORMATION
CARRIER STRATEGIC ACCOUNTS - FOR QUESTIONS OR QUOTATIONS CONTACT DEBORAH.ROY-JONES@CARRIER.UTC.COM, 315.432.7941. FOR GENERAL ACCOUNT NEEDS PLEASE CONTACT MATT.MURPHY@CARRIER.UTC.COM, 630.920.9151. CONTACTS ARE AVAILABLE ALL 7 BUSINESS DAYS FOR FACTORY START UP AND CALIBRATION OF HVAC UNITS.

SYMBOLS & ABBREVIATIONS LEGEND

- HUMIDITY SENSOR
- THERMOSTAT
- SENSOR
- ANNUNCIATOR
- DUCT SMOKE DETECTOR
- DUCT OFFSET
- SUPPLY DUCT - UP
- SUPPLY DUCT - DN
- RA OR EXH. DUCT UP
- RA OR EXH. DUCT DN
- ELBOW TURNING VANES
- FIRE DAMPER (F.D.)
- MANUAL BALANCE DAMPER
- TRANSITION
- SUPPLY DIFFUSER
- RETURN GRILLE
- EXHAUST GRILLE
- SPIN-IN FITTING
- SPIN-IN FITTING W/ MAN. BAL. DPR.
- CONNECT TO EXISTING

X"Ø	ROUND DUCT
AB.	ABOVE
ACCU	AIR COOLED CONDENSING UNIT
A/C	AIR CONDITIONING
AD.	ACCESS DOOR
AFF.	ABOVE FINISHED FLOOR
AHU	AIR HANDLING UNIT
ARCH.	ARCHITECT
BDD.	BACKDRAFT DPR.
BEL.	BELOW
BLDG.	BUILDING
CFM.	CUBIC FEET PER MINUTE
CLG.	CEILING
COND	CONDENSATE PIPE
CONT.	CONTINUATION
CONTR.	CONTRACTOR
COORD.	COORDINATE
CUH	CABINET UNIT HEATER
DIFF.	DIFFUSER
DISC.	DISCONNECT
DN.	DOWN
DPR.	DAMPER
EA.	EACH
EC.	ELECTRICAL CONTRACTOR
EER.	ENERGY EFFICIENCY RATIO
EX.	EXISTING
EXH.	EXHAUST
F. DPR.	FIRE DAMPER
FLEX.	FLEXIBLE
FLR.	FLOOR
GC.	GENERAL CONTRACTOR
HC.	HEATING CONTRACTOR
HP.	HORSEPOWER
MAX.	MAXIMUM
MCA.	MAXIMUM CIRCUIT AMPACITY
MECH.	MECHANICAL
MFR.	MANUFACTURER
MIN.	MINIMUM
MOCP.	MAXIMUM OVERCURRENT PROTECTION
MTD.	MOUNTED
NTS.	NOT TO SCALE
OA.	OUTSIDE AIR
PC.	PLUMBING CONTRACTOR
RA.	RETURN AIR
RTU	ROOFTOP UNIT
SA.	SUPPLY AIR
TV.	TURNING VANES
TYP.	TYPICAL
WH.	WATER HEATER
W/	WITH

COMMERCIAL KITCHEN NOTES

HVAC, FIRE PROTECTION AND PLUMBING

ALL NEW EQUIPMENT, PIPING, ETC SHALL BE INSPECTED AND LOCATED BEFORE AND AFTER ALL NEW CONSTRUCTION. DETAILS OF PERFORMANCE/CONDITION/SIZING AND LOCATION SHALL BE SUPPLIED TO THE ENGINEER AND OWNER. AIR CAPACITIES FOR ALL SUPPLY AND EXHAUST SYSTEMS SHALL BE MEASURED AT THE GRILLES TO DETERMINE IF DESIGN AIR FLOWS NOTED ON OUR PLANS CAN BE MET. ANY EXTRA WORK REQUIRED TO THE ABOVE MENTIONED SHALL BE DETERMINED PRIOR TO NEW CONSTRUCTION. CONTRACTOR TO ALLOW FOR THE INSPECTION IN THE PRICE INCLUDING X-RAYING, AIR FLOW MEASUREMENT, SCANNING AND CAMERA SCOPE TO EXISTING BURIED DRAINS. NO EXTRAS WILL BE ALLOWED ONCE NEW CONSTRUCTION STARTS.

CONTRACTOR TO OBTAIN LATEST SPREAD SHEETS/SHOP DRAWINGS FROM KITCHEN CONSULTANT FOR APPLIANCE P&D AND HVAC REQUIREMENTS PRIOR TO ANY ROUGH-IN WORK.

THIS CONTRACTOR SHALL DO ALL WIRING AND CONTROLS AS NOTED ON WIRING NOTES IN EQUIPMENT SCHEDULE.

THIS CONTRACTOR SHALL:
1. CONSTRUCT ENTIRE KITCHEN HOOD EXHAUST SYSTEM TO N.F.P.A 96 STANDARDS.
2. REFER TO ARCH. AND/OR INTERIOR DESIGN DRAWINGS FOR HOOD LOCATION AND APPROVED KITCHEN HOOD SHOP DRAWINGS FOR EXACT LOCATION OF EXHAUST DUCT CONNECTIONS.
3. REFER TO LATEST KITCHEN EQUIPMENT DRAWINGS AND APPROVED SHOP DRAWINGS FOR FINAL GAS, PLUMBING AND DRAINAGE HOOK UP SIZES AND LOCATIONS. CONTRACTOR TO REFER TO MANUFACTURERS INSTALLATION MANUALS AND RECOMMENDATIONS AND PROVIDE ALL NECESSARY EQUIPMENT, VALVES, PIPING ETC. TO SUIT. EXACT LOCATION OF EQUIPMENT ROUGH-INS ARE TO BE DETERMINED AT SITE. ANY CHANGES TO THE KITCHEN EQUIPMENT LINE UP MUST BE REPORTED TO THE ENGINEER PRIOR TO INSTALLATION.
4. USE ONLY APPROVED HALTON FAN AND HOOD PACKAGE.
5. ROOF MOUNTED FANS SHOULD BE ACCESSIBLE ON ALL SIDES ACCESSIBLE WITHOUT A LADDER.

ANSUL NOTES

THIS INSTALLATION IS TO BE MADE IN ACCORDANCE WITH THE R-102 INSTALLATION MANUAL AND IN ACCORDANCE WITH ALL STATE AND LOCAL CODES. THE WIRE ROPE FOR THE DETECTOR AND REMOTE PULL STATION IS TO BE INSTALLED BY AN AUTHORIZED AND FACTORY TRAINED DISTRIBUTOR OR SERVICE REPRESENTATIVE. THIS INSTALLATION IS TO BE INSPECTED, PUT INTO OPERATION AND CERTIFIED BY AN AUTHORIZED AND FACTORY TRAINED DISTRIBUTOR OR SERVICE REPRESENTATIVE. ELECTRICAL CONTACTS AND WIRING FOR APPLIANCE SHUT OFF TO BE PROVIDED BY THE ELECTRICAL CONTRACTOR. ANSUL R-102 RESTAURANT FIRE SUPPRESSION SYSTEMS HAVE BEEN TESTED AND ARE LISTED BY UNDERWRITERS' LABORATORIES INC. AS PRE-ENGINEERED SYSTEMS, SHALL COMPLY WITH ALL RELEVANT ANSUL INSTALLATION RECHARGE INSPECTION AND MAINTENANCE MANUALS AND SHALL COMPLY WITH NFPA 96 WHEN INSTALLED AND CERTIFIED BY AUTHORIZED TRAINED ANSUL DISTRIBUTORS IN ACCORDANCE WITH THE MANUAL. ALL AGENT DISTRIBUTION PIPING AND DETECTION CONDUIT HOOD PENETRATIONS MUST BE PROPERLY SEALED IN ACCORDANCE WITH NFPA 96.

AIR DEVICE SCHEDULE

DIFFUSER MARK	NECK SIZE	FACE SIZE	TYPE: DIFFUSER	TYPE: REGISTER	TYPE: GRILLE	ACCESSORY: OBD	ACCESSORY: STR	ACCESSORY: ASD	MOUNT: LAY-IN	MOUNT: SURFACE	PATTERN	DUTY: SUPPLY	DUTY: RETURN	DUTY: EXHAUST	TITUS MODEL NO.	PRICE MODEL NO.	AMER. LOUVER MODEL NO.	NOTES
RG-1	PER PLAN	24"x24"			X		X		X		PERFORATED		X		PAR-AA	APDDR	-	
RG-2	8"	12"x12"			X	X	X			X	PERFORATED		X		PAR-AA	APDDR	-	1,2, RR EX
SD-1	12"X8"	14"X10"	X							X	LOUVERED	X			300RL	520	-	3 DINING SUPPLY
SD-2	22"x22"	24"x24"	X						X		PERFORATED	X			PAR-AA	APDDR	-	1,5,6 CEILING MOUNTED HOOD SUPPLY DUMP BOX
SD-3	PER PLAN	24"x24"	X						X		4 WAY				PAS-AA	APDN	-	
SD-4	8"	12"x12"	X			X				X	4 WAY			X	PAS-AA	APDN		1,2 DRYWALL CEILING MTD SUPPLY
SD-5	12"x6"	14"x8"	X				X				DOUBLE DEF.	X			S300FS	SDGE-AC	-	3,4 DINING SUPPLY
TD-5	PER PLAN	24"x24"			X				X		PERFORATED			X	PAR-AA	APDDR	STR-ERFG-8W	1,2 CAPTURE JET TRANSFER

ACCESSORY NOTE: OBD-OPPOSED BLADE DAMPER, STR-SQUARE TO ROUND TRANSITION

AIR DEVICE SCHEDULE NOTES

1. WHITE
2. ROUND NECK
3. DUCT MOUNTED
4. CLEAR ANODIZED
5. SUPPLY DIFFUSERS AT HOOD LOCATION USE SHOP OR FIELD FABRICATED DUMP BOXES, WHICH CONSIST OF PERFORATED DIFFUSER WITH NO PATTERN CONTROLLERS, AND SQUARE PLENUM BOX THAT CAN ACCEPT ROUND DUCT CONNECTION. 4 WAY DIFFUSERS ARE PROHIBITED AROUND THE HOODS.
6. REFER TO DUMP BOX DETAIL ON DRAWING M2.0.

FAN SCHEDULE

MARK	CFM	SP	HP	V/P	ACCESSORIES: BACK DRAFT DAMPER	ACCESSORIES: BIRD SCREEN	ACCESSORIES: DISCONNECT SWITCH	ACCESSORIES: SPEED CONTR.	ACCESSORIES: DIRECT DRIVE	MODEL NO.	REMARKS
EF-1	1150	1.1	1	208/1			X	X	X	DU85H	1,2,3
EF-2	1176	1.1	1	208/1			X	X	X	DU85H	1,2,3
EF-3	300	0.375	1/8	115/1	X	X	X	X	X	DR10H	1,4

1 FANS WILL BE SUPPLIED AS PART OF THE EXHAUST HOOD PACKAGE.
2 PROVIDE U.L. APPROVED GREASE RATING.
3 EXHAUST FAN IS CONNECTED TO THE HOOD ON SWITCH. FAN SHALL OPERATE AT ALL TIMES RESTAURANT IS OPEN.
4 FAN TO OPERATE FROM SMART BREAKER IN FCLC SYSTEM.

ELECTRIC UNIT HEATER SCHEDULE

MARK	KW	V/P	FAN HP	MOCP	ACC.: BUILT-IN T-STAT	ACC.: DISCONNECT SWITCH	MODEL NO.	REMARKS
UH-1	3.3	208/1	1/125	20 A	X	X	TRANE - UHEC-032	1,2,3

1 UNIT HEATER TO BE MOUNTED VERTICALLY OVERHEAD AT ENTRY.
2 PAINT TO MATCH DINING ROOM DUCTWORK.
3 PROVIDE WITH UNIT-MOUNTED THERMOSTAT.

SITE NUMBER:	12281
BASE MDL:	SMART 55 - SQUARE 2017
ASSET TYPE:	FRANCHISEE
CLASSIFICATION:	NEW
OWNER:	WENSPOK
BASE VERSION:	2017
UPGRADE CLASSIFICATION:	NEW BUILD
PROJECT YEAR:	2020
FURNITURE PACKAGE:	2016 V3
DRAWING RELEASE	JANUARY 2020

Russell C. Page
ARCHITECTS
204 N. Division Street, Suite 'E'
Spokane, WA 99202
(509) 467-9748 Fx: (509) 467-9817

PROJECT TYPE: NEW SMART 55 SQE

Wendy's
HIGHWAY 95
PONDERAY, ID 83852

REV. DATE DESCRIPTION

ISSUE DATE: 5-28-2020
PROJECT NUMBER: 20-113
DRAWN BY: MEAuthor
CHECKED BY: Checker

SEAL
LICENSED ARCHITECT AR 984311
8/10/20
RUSSELL C. PAGE
STATE OF IDAHO

SHEET NAME
CARRIER MECHANICAL SCHEDULES

SHEET NUMBER
M3.0

8/12/2020 7:10:10 AM, N:\Home\20-113 WENDYS PONDERAY\70_SMART-1.0-55-SQUARE_M3-0_Mechanical Schedules.dwg, user

HOOD INFORMATION TABLE

HOOD NUMBER	HOOD MODEL	EXHAUST AIR FLOW REQUIREMENTS						GREASE EXTRACTOR				HOOD CONSTRUCTION	HOOD WEIGHT (LBS)
		EXHAUST CFM	T.A.B. PORT STATIC PRESSURE	TOTAL HOOD STATIC PRESSURE	EXHAUST COLLAR			QTY.	SIZE		TYPE		
					QTY.	LENGTH	WIDTH		L	H			
L0502	KVM	1175	.11"	.21"	1	12"	9"	5	20"	13"	KSA	EXP 18GA. 430 S.S.	708
								–	11"	13"			

TOTAL EXH. CFM = 1175

ELECTRICAL CONNECTION SCHEDULE

CONNECTION #	CONNECTION DESCRIPTION	FROM	TO
E2-H	FIELD CONNECTION FOR CANOPY LIGHTS & CJ FAN	HOOD #L0307	HOOD #L0502

CAPTURE JET CFM	CAPTURE JET STATIC PRESSURE
81	.27"

DUCTED CJ FAN DETAIL

DUCT & GRILLES PROVIDED & INSTALLED BY CONTRACTOR

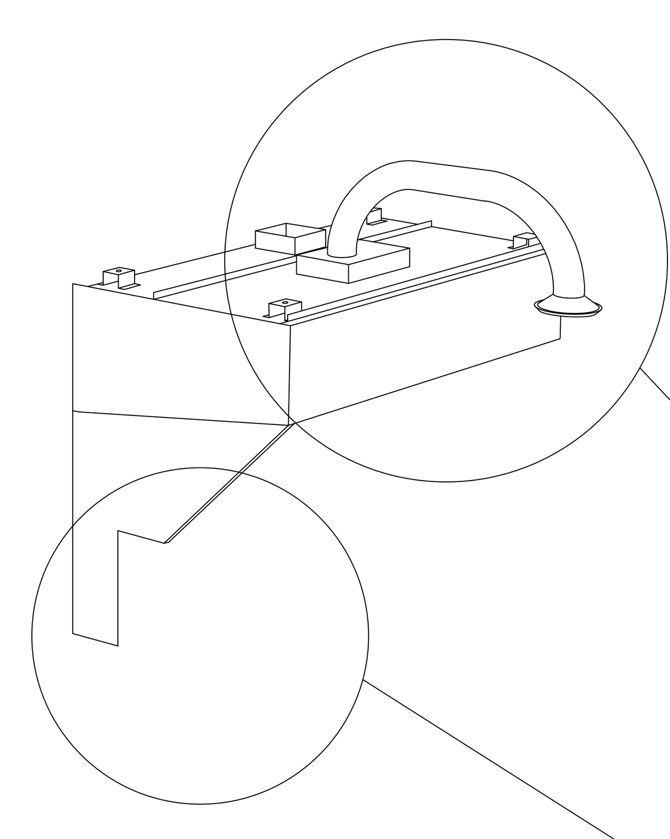

SIDE SKIRT NOTCH DETAIL

NOTE

HOODS L0307 AND L0502 ARE TIED TO THE SAME ANSUL SYSTEM. SEE SHEET 2 FOR HOOD L0307

ANSUL R-102 SYSTEM

REMOTE MOUNTED:

(1) REGULATED RELEASE (WITH ONE TANK)
(1) SINGLE TANK ENCLOSURE (WITH ONE TANK)

ANSUL AUTOMAN AND DOUBLE TANK ENCLOSURE ARE PRESUMED TO BE FIELD MOUNTED TO THE END OF THE HOOD UNLESS "REMOTE MOUNTED" IS SELECTED IN THE BOX BELOW:

☐ REMOTE MOUNTED ANSUL

KVM SIDE SKIRT INSTALLATION

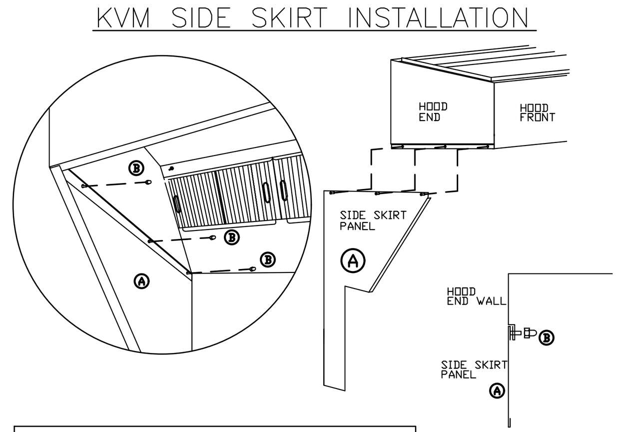

Ⓐ Side Skirts (By Halton)
Ⓑ Acorn Nuts ¼" x 20 thread (By Halton)

1. Panels "A" are placed at the outside ends of the hood at each end of the hood group.
2. Align the weld studs on the upper edges of the side skirts with the holes in the lower edge of hood ends and hang the panels on the ends of the hood group.
3. Fasten panels "A" to the ends of the hood with hardware "B".

ANSUL MICROSWITCH DETAIL

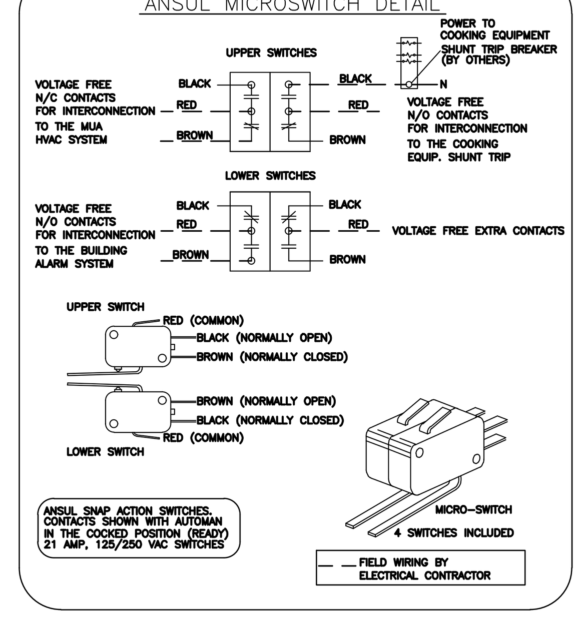

ANSUL R-102 SYSTEM

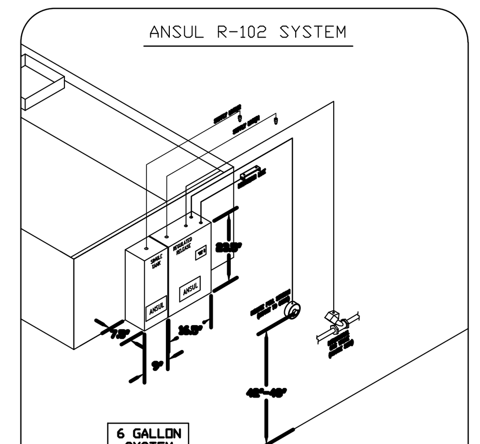

1) ANSUL R-102 FIRE SYSTEM
2) TWO TANK SYSTEM (6 GALLON)
3) 3/8" BLACK IRON PIPING (CONCEALED)
3/8" S.S. APPLIANCE DROPS (EXPOSED)
4) MECHANICAL GAS VALVE = (ADVISE SIZE)

CEILING CLOSURE PANELS

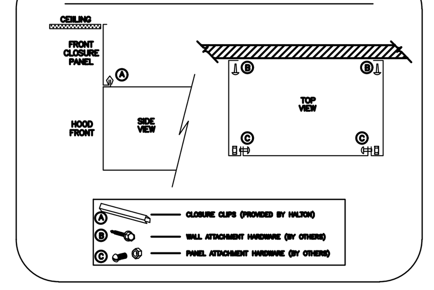

GENERAL SPECIFICATIONS

1– HOOD CONSTRUCTION AND DESIGN MEETS NFPA 96 AND UL 710 STANDARD.

2– HOOD IS NSF AND ETL LISTED UNDER THE FOLLOWING FILE NUMBER: ETL #3085193CLE-002

3– ALL INSTALLATION WORK IS TO BE PERFORMED BY QUALIFIED PERSONS AND IN ACCORDANCE WITH STATE AND LOCAL BUILDING CODE REQUIREMENTS.

4– THE INSTALLATION SHALL BE IN ACCORDANCE WITH NFPA 96, REMOVAL OF SMOKE AND GREASE LADEN VAPORS FROM COMMERCIAL COOKING EQUIPMENT.

5– ALL EXHAUST DUCTWORK AND TRANSITIONS ARE TO BE PROVIDED BY THE HVAC CONTRACTOR.

6– CLEARANCE FROM HOOD AND DUCTS TO COMBUSTIBLE MATERIAL SHALL BE PER APPLICABLE BUILDING CODES.

7– FOR PROPER OPERATION OF THE HOOD SYSTEM, IT IS THE RESPONSIBILITY OF THE GENERAL CONTRACTOR TO HAVE THE HOOD BALANCED AND TESTED TO ENSURE THAT THE EXHAUST AND SUPPLY REQUIREMENTS OF THE HOOD ARE MET.

INSTALLATION REQUIREMENTS

KITCHEN EQUIPMENT CONTRACTOR'S REQUIREMENTS

1– PROVIDE DRAWINGS TO APPROPRIATE TRADES REFERENCING UTILITY SERVICE AND COORDINATE FINAL CONNECTION.

2– DELIVER, ASSEMBLE AND INSTALL HALTON SYSTEM PER DRAWING.

3– FURNISH WIRING AND PLUMBING DIAGRAMS TO END USER.

4– THE K.E.C MUST INFORM HALTON OF ANY CHANGES IN EQUIPMENT OR BUILDING STRUCTURE. FIELD MODIFICATIONS ARE THE RESPONSIBILITY OF THE K.E.C.

5– IF HALTON MANUAL EXHAUST VOLUME DAMPERS ARE PROVIDED, THE K.E.C. IS RESPONSIBLE FOR THEIR INSTALLATION OR TO MAKE ARRANGEMENTS WITH OTHER TRADES FOR THEIR INSTALLATION.

ELECTRICAL CONTRACTOR'S REQUIREMENTS

1– PROVIDE AND CONNECT ALL REQUIRED VOLTAGES, CONNECTORS, WIRING, CONDUIT, ETC., PER NEC AND ALL APPLICABLE LOCAL CODES.

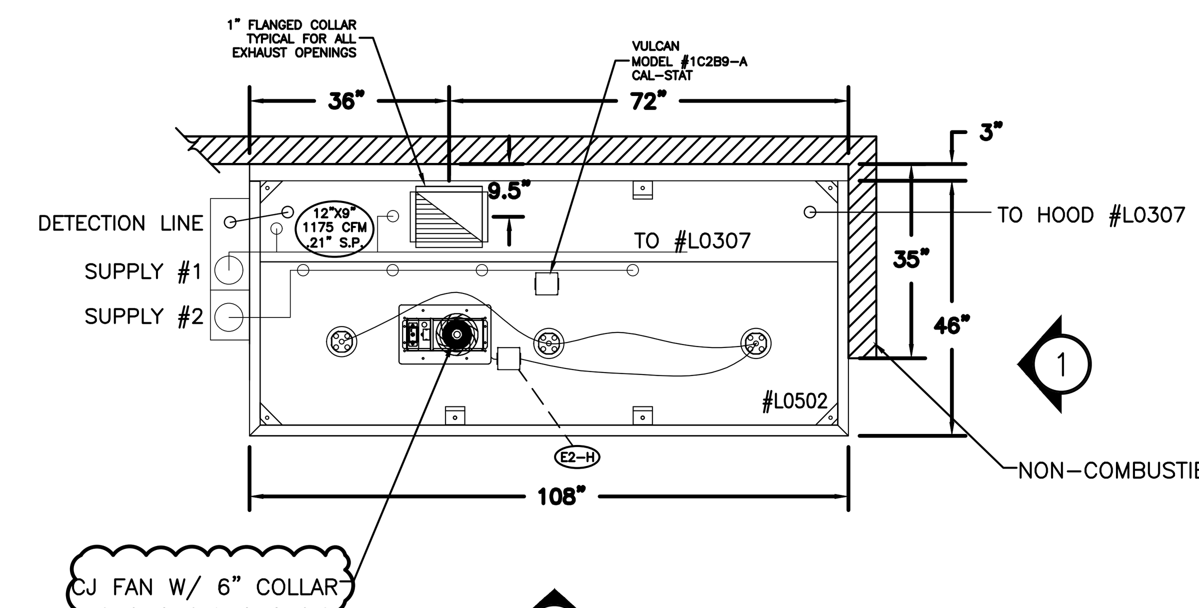

1 ITEM # L0502
PLAN VIEW

NOTE
T-STAT IS FACTORY PRE-SET FOR 95 DEGREES, IF SPACE CONDITIONS EXCEED 95 DEGREES WITHOUT COOKING TAKING PLACE, THEN A FIELD ADJUSTMENT OF THE T-STAT WILL BE REQUIRED BY PERSONNEL OTHER THAN HALTON. T-STAT IS A SAFETY INTERLOCK ONLY. IT IS NOT INTENDED AS A PRIMARY MEANS OF ENGAGING THE EXHAUST FAN.

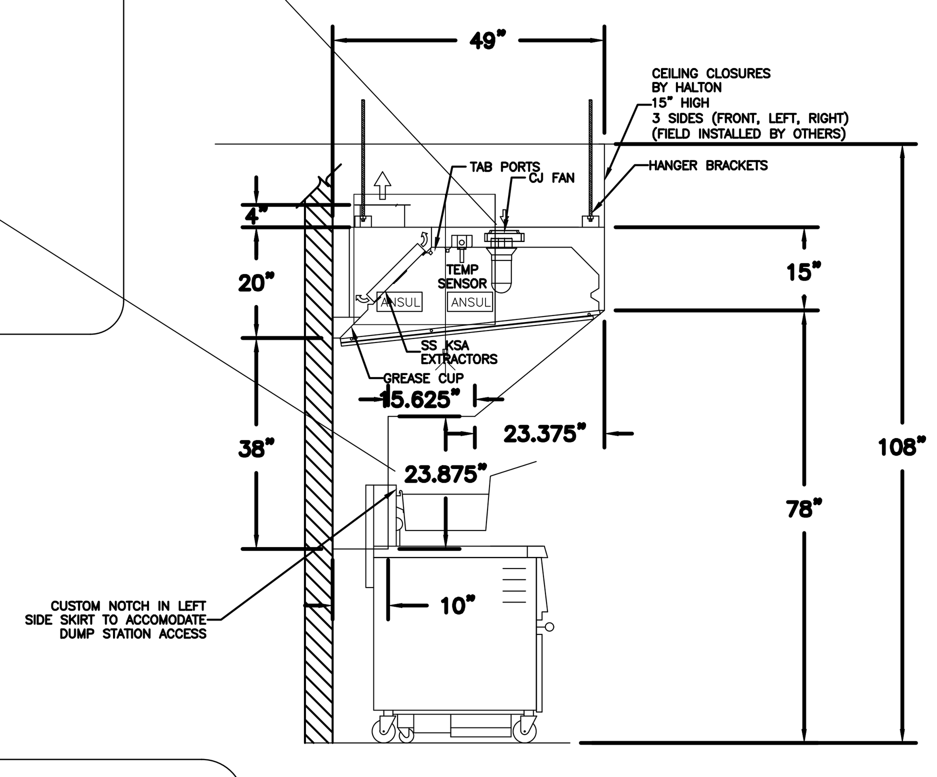

4 ITEM # L0502
SECTION VIEW

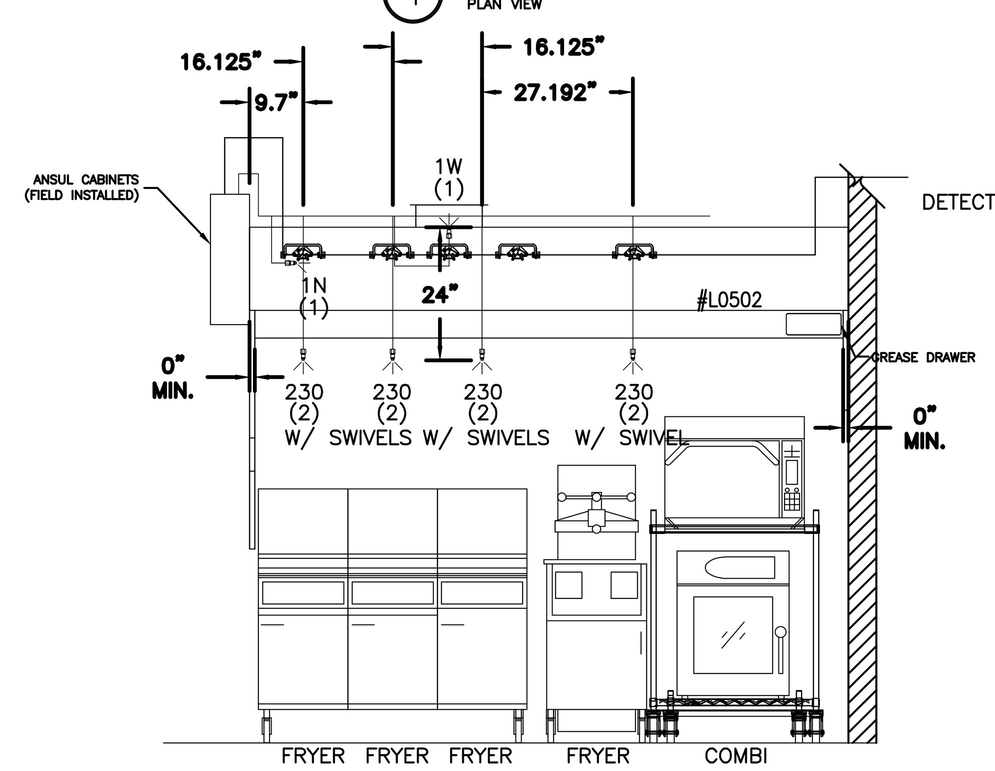

2 ITEM # L0502
ELEVATION VIEW

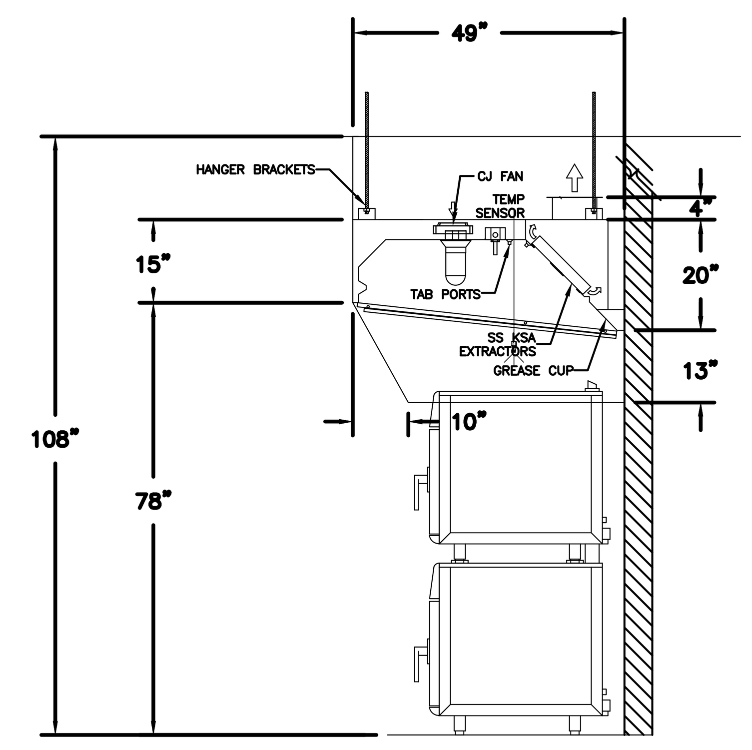

3 ITEM # L0502
SECTION VIEW

FRYER HOOD

IF YOU HAVE ANY QUESTIONS, PLEASE CONTACT SIMPLE MISSION(770.598.0531) OR BCOX@SIMPLEMISSION.ORG.

ELECTRICAL EQUIPMENT REQUIREMENTS

GLOBE LIGHT FIXTURE
(ACCEPTS A19 LIGHT BULBS)
100 WATT MAX BULB= .83 AMP EA.

CAPTURE JET FAN= .72 AMP EA

ALL HOOD CIRCUITS ARE NOT TO EXCEED 15 AMP

LIGHT BULBS, IF REQUIRED, ARE TO BE PROVIDED BY OTHERS

CEILING HEIGHT NOTE

IF HALTON COMPANY IS TO PROVIDE CEILING CLOSURE PANELS, THE EXACT DIMENSION OF THE FINISHED CEILING HEIGHT MUST BE PROVIDED PRIOR TO RELEASE.

FINISHED CEILING HEIGHT A.F.F.: ____________

ANSUL ENCLOSURE MOUNTING DETAIL

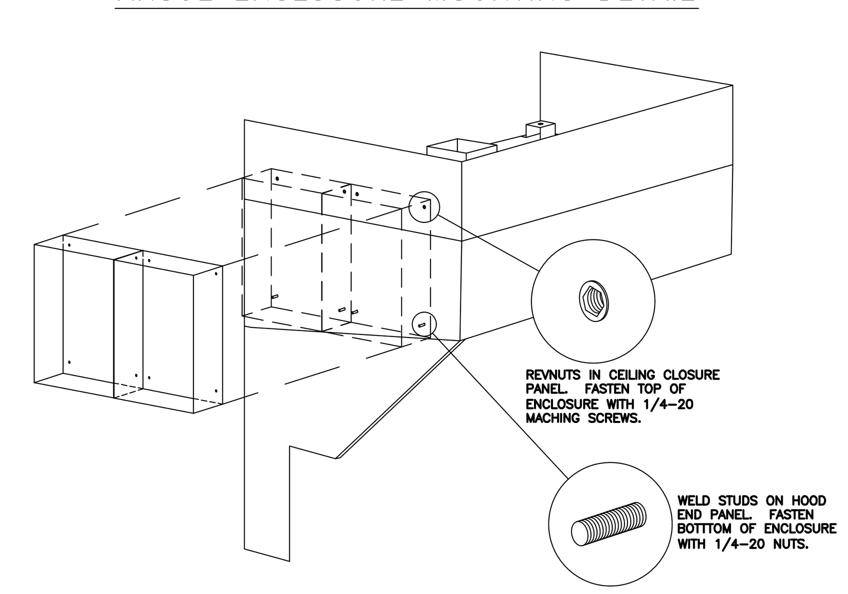

Typical wiring of Capture-Jet fan REMOTE SWITCH PANEL BY OTHERS

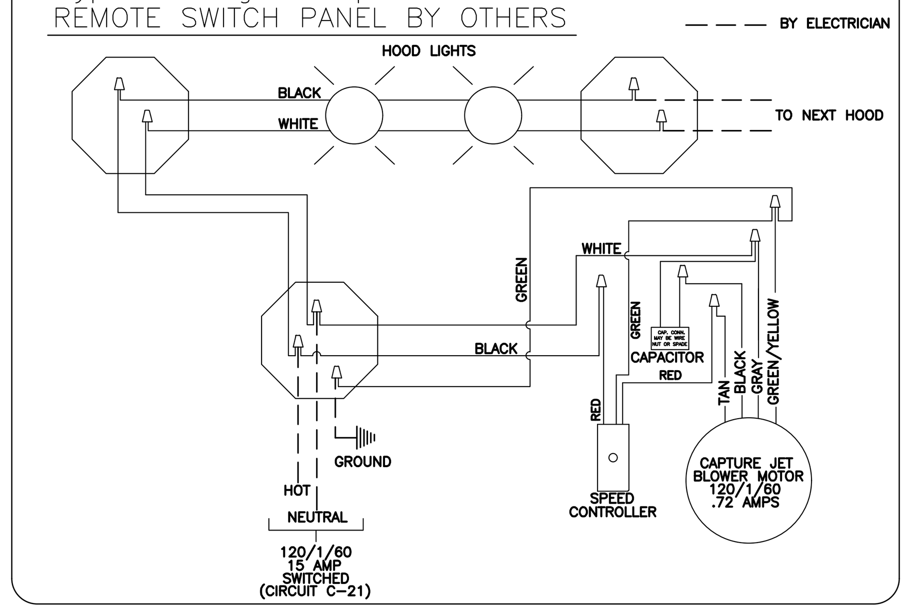

HANGER BRACKET LAYOUT

NOTE:
STRUCTURAL ENGINEER TO VERIFY LOCAL REQUIREMENTS HANGING ARE THE RESPONSIBILITY OF INSTALLING CONTRACTORS, LOCAL CODES MUST BE FOLLOWED.

HOODS 95"L & LESS WILL NOT HAVE THE FOUR BRACKETS IN THE CENTER OF HOOD

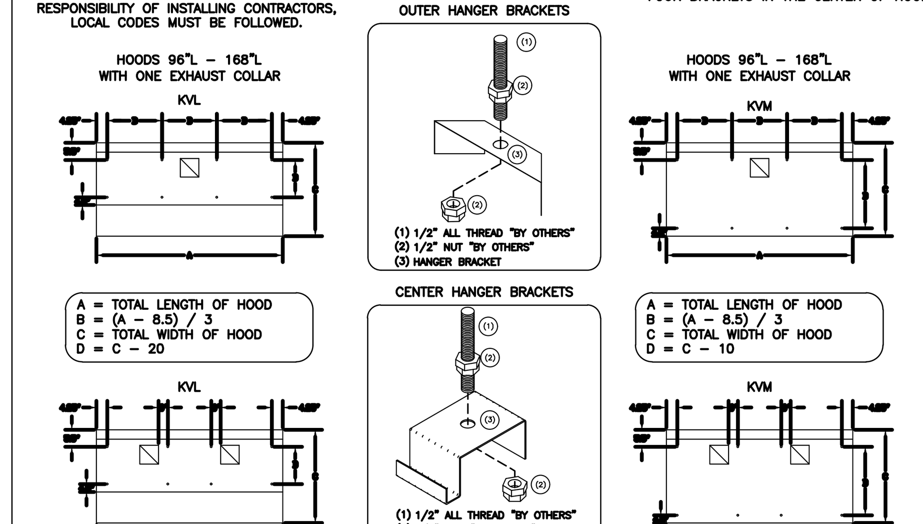

KSA GREASE EXTRACTOR

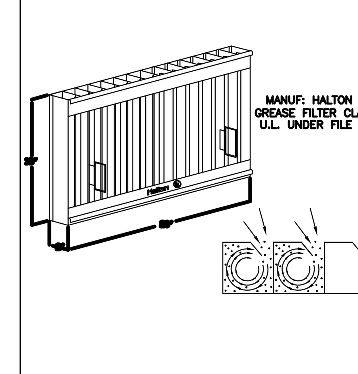

EFFECTIVE AREA = 1.25 SQUARE FEET PER FULL FILTER
EFFECTIVE AREA = 0.75 SQUARE FEET PER HALF FILTER
SEE HOOD SUBMITTAL DRAWINGS FOR FILTER QUANTITY

EXTRACTION OF CONTAMINANTS FROM THE EXHAUST AIR IS PROVIDED BY THE KSA MULTI-CYCLONE GREASE EXTRACTORS. EFFICIENT GREASE EXTRACTION IS ACHIEVED BY FORCING THE EXHAUST AIR TO SPIRAL CONTINUOUSLY IN THE SAME DIRECTION IN THE MULTIPLE CHAMBERS OF THE EXTRACTOR, THUS SEPARATING THE GREASE PARTICLES FROM THE AIR FLOW CENTRIFUGALLY.
HIGH EXTRACTION EFFICIENCY AND LOW PRESSURE LOSS OVER THE KSA REMAIN PRACTICALLY CONSTANT.

PERFORMANCE CRITERIA

OTHER MANUFACTURERS WISHING TO OFFER AN ALTERNATE TO THE SPECIFIED MANUFACTURER MUST APPLY FOR PERMISSION TO DO SO IN WRITING FROM THE OFFICE OF THE SPECIFYING CONSULTANT. APPLICATION MUST BE RECEIVED BY THE CONSULTANT AT LEAST TEN WORKING DAYS PRIOR TO THE BID DATE. ANY ALTERNATE SYSTEM MUST MEET CONSTRUCTION AND PERFORMANCE REQUIREMENTS AND EFFICIENCIES AS OUTLINED IN THIS SPECIFICATION.

REQUESTS FOR APPROVAL MUST INCLUDE GREASE FILTRATION PERFORMANCE DATA (MICRON SIZE VS. EXTRACTION EFFICIENCY) AND MANUFACTURERS OWN EXHAUST AIR FLOW CALCULATIONS BASED ON THE CONVECTIVE HEAT LOAD OF COOKING EQUIPMENT BENEATH THE HOOD.

EFFICIENCY COMPARISON DATA TO BE PERFORMED IN ACCORDANCE WITH THE MOST CURRENT ASTM STANDARD F1704 AND INCLUDE RESULTS FOR THE REQUIRED CAPTURE AND CONTAINMENT EXHAUST AIR FLOW IN ACCORDANCE WITH THE "TEST METHOD TO DETERMINE THE THRESHOLD OF CAPTURE AND CONTAINMENT." DATA MUST INCLUDE THERMAL IMAGING RESULTS VALIDATING CONFORMANCE TO ASTM F1704 AND SUPPLY AIR TEMPERATURE REQUIREMENT OF 74°F.

MAKE UP AIR WILL BE CALCULATED SO THAT THE SAME AMOUNT OF AIR WILL BE TAKEN FROM THE ZONE AS IS REQUIRED BY THE SPECIFIED SYSTEM. AN ADDITIONAL LOAD CANNOT BE PLACED ON THE KITCHEN HVAC SYSTEM.

MANUFACTURER MUST PROVIDE A WRITTEN GUARANTEE OF PERFORMANCE, ENSURING THE SPECIFYING ENGINEER THAT THE SYSTEM WILL PERFORM TO THE ENGINEER'S SATISFACTION WHEN INSTALLED AND BALANCED ACCORDING TO DESIGN AIR FLOWS AND RESULTS OF ASTM STANDARD F1704 TEST. (AS DETERMINED BY TAB PORTS AND PRESSURE VS. AIR FLOW CURVES.) CONSULTANT RESERVES THE RIGHT TO REJECT ANY SYSTEM WHICH, WHEN INSTALLED, DOES NOT PROVIDE CAPTURE AND CONTAINMENT AT THE THRESHOLD FLOW RATE DETERMINED IN ASTM F1704. REJECTED SYSTEM MUST BE REPLACED WITH SPECIFIED SYSTEM, WITH ALL REPLACEMENT COSTS PAID BY MANUFACTURER OF REJECTED SYSTEM.

ANY CHANGES IN THE SPECIFIED SIZING OF POWER WIRING, FAN SIZE, HORSEPOWER REQUIREMENTS, OR GAS LINES DUE TO THE USE OF ANY SYSTEM OTHER THAN THAT WHICH IS SPECIFIED IS THE RESPONSIBILITY OF THE ALTERNATE HOOD MANUFACTURER, AND MUST BE COORDINATED BY THE HOOD MANUFACTURER AND CONTRACTORS INVOLVED.

FOR REFERENCE ONLY

THIS DRAWING MUST BE CHECKED, SIGNED AND RETURNED TO THE APPROPRIATE FACTORY. PLEASE VERIFY THE FOLLOWING:
1. ALL DIMENSIONAL INFORMATION, MOUNTING POSITIONS AND CLEARANCES.
2. THE LOCATION AND TYPE OF COOKING EQUIPMENT.

NOTE TO APPROVER
ANY CHANGES IN COOKING EQUIPMENT SUCH AS INCREASED ENERGY INPUTS OR EQUIPMENT POSITION MAY AFFECT EXHAUST AIRFLOW. HALTON MUST BE NOTIFIED IF ANY OF THESE CHANGES OCCUR, A RECALCULATION EXHAUST AIRFLOW MAY BE REQUIRED.

☐ REVISE AND RESUBMIT

APPROVED FOR FABRICATION
☐ WITH NO CHANGES ☐ WITH CHANGES AS NOTED

APPROVED BY ____ DATE ____

COMPLIES WITH LATEST NFPA-96

MAIL APPROVED DRAWINGS TO APPROPRIATE FACTORY BELOW: WEBSITE: WWW.HALTONCOMPANY.COM

HALTON CO. (CANADA) ☐
1021 BREVIK PLACE
MISSISSAUGA, ON L4W 3R7
1-905-624-0301

HALTON CO. (USA) ☒
101 INDUSTRIAL DRIVE
SCOTTSVILLE, KY 42164
1-270-237-5600

REV.	REVISION DESCRIPTION	BY	DATE
8	UPDATED PROJECT NAME AND COOKLINE ELEVATION	M.H.	10.04.17
9	DIMENSIONS ANSUL, REVISED TANKS, ADDED NOTE AND SIMPLE MISSION LOGO	WU	05.01.18
10	REVISED RIGHT SIDE SKIRT, EXH COLLAR LOCATION, AND CFMS	WU	06.28.18
11	REMOVED KFR TOOL DETAIL FROM DRAWINGS	WU	03.25.19
5	NO CHANGE	WU	12.5.16
6	NO CHANGE	WU	03.27.17
7	NO CHANGE	WU	05.15.17

PROJECT: WENDY'S SINGLE LINE NGK L0502
LOCATION:
DRAWN BY: M.H. DATE: 01.08.16
SCALE: NOT TO SCALE
CONSULTANT:

Halton

DRAWING TITLE: HOOD DETAILS
DRAWING No.: U16-018
REV. NO.: 11 SHEET NO.: 1 of 3

SITE NUMBER:	12281
BASE MDL:	SMART 55 - SQUARE 2017
ASSET TYPE:	FRANCHISEE
CLASSIFICATION:	NEW
OWNER:	WENSPOK
BASE VERSION:	2017
UPGRADE CLASSIFICATION:	NEW BUILD
PROJECT YEAR:	2020
FURNITURE PACKAGE:	2016 V3
DRAWING RELEASE	JANUARY 2020

Russell C. Page ARCHITECTS
204 N. Division Street, Suite 'E'
Spokane, WA 99202
(509) 467-9748 Fx: (509) 467-9817

PROJECT TYPE: NEW SMART 55 SQE

Wendy's
HIGHWAY 95
PONDERAY, ID 83852

REV.	DATE	DESCRIPTION
△		
△		

ISSUE DATE: 5-28-2020
PROJECT NUMBER: 20-113
DRAWN BY: HALTON
CHECKED BY: HALTON

SEAL
LICENSED ARCHITECT AR 984311
8/10/20
RUSSELL C. PAGE
STATE OF IDAHO

SHEET NAME
HOOD DETAILS

SHEET NUMBER
H1.2

8/10/2020, 12:41 PM, N:\Home\20-113 WENDYS PONDERAY\80_SMART-1.0-55-SQUARE_H1_X_Hood Details-Halton.dwg, user

HOOD INFORMATION TABLE

HOOD NUMBER	HOOD MODEL	EXHAUST AIR FLOW REQUIREMENTS: EXHAUST CFM	T.A.B. PORT STATIC PRESSURE	TOTAL HOOD STATIC PRESSURE	EXHAUST COLLAR: QTY.	LENGTH	WIDTH	GREASE EXTRACTOR: QTY.	SIZE: L	H	TYPE	HOOD CONSTRUCTION	HOOD WEIGHT (LBS)
L0307	KVE	1150	.32"	.38"	1	12"	12"	3	20"	13"	KSA	EXP 18GA. 430 S.S.	713
								–	11"	13"			

TOTAL EXH. CFM = 1150

NOTE

HOODS L0307 AND L0502 ARE TIED TO THE SAME ANSUL SYSTEM. SEE SHEET 1 FOR HOOD L0502

NOTE

HOOD TO HAVE CUSTOM FILTER RACK WITH INCREASED TRIM ANGLES TO ONLY FIT 3 FILTERS. FILTERS TO BE CENTERED ABOVE ACTIVE GRIDDLE.

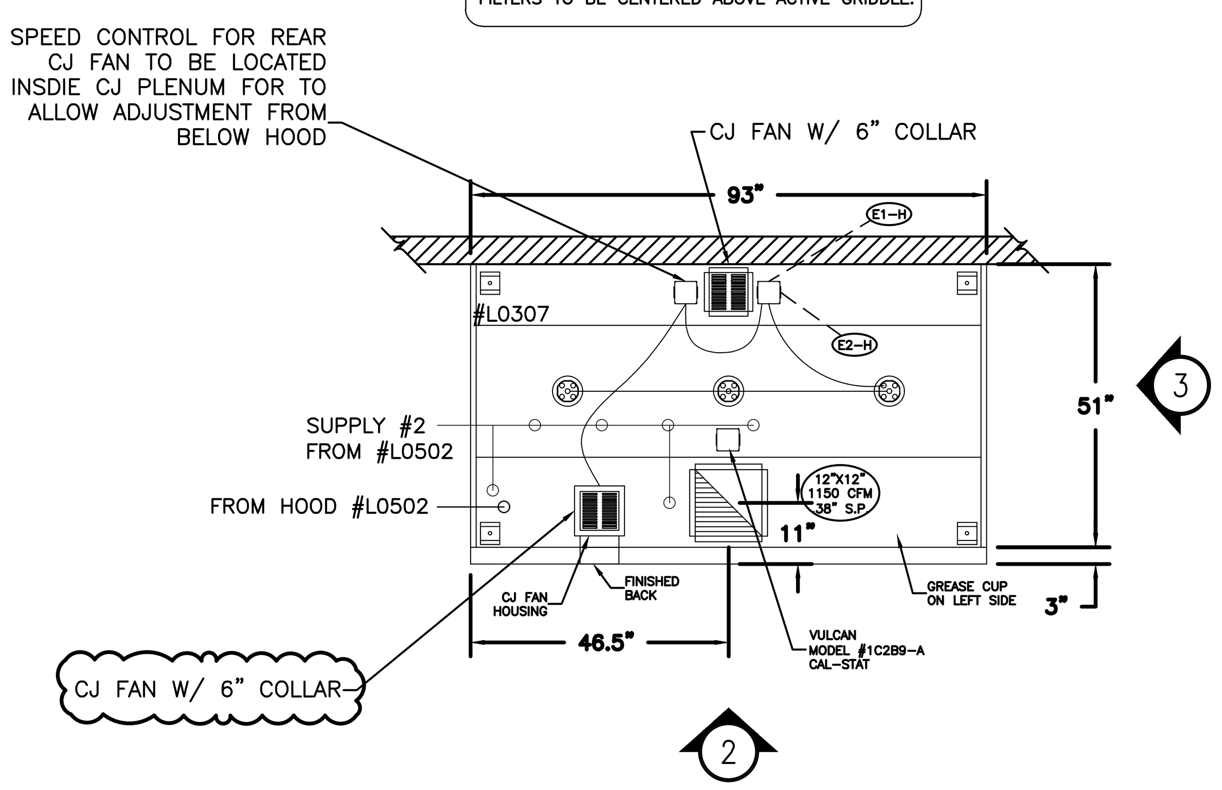

1 ITEM # L0307
PLAN VIEW

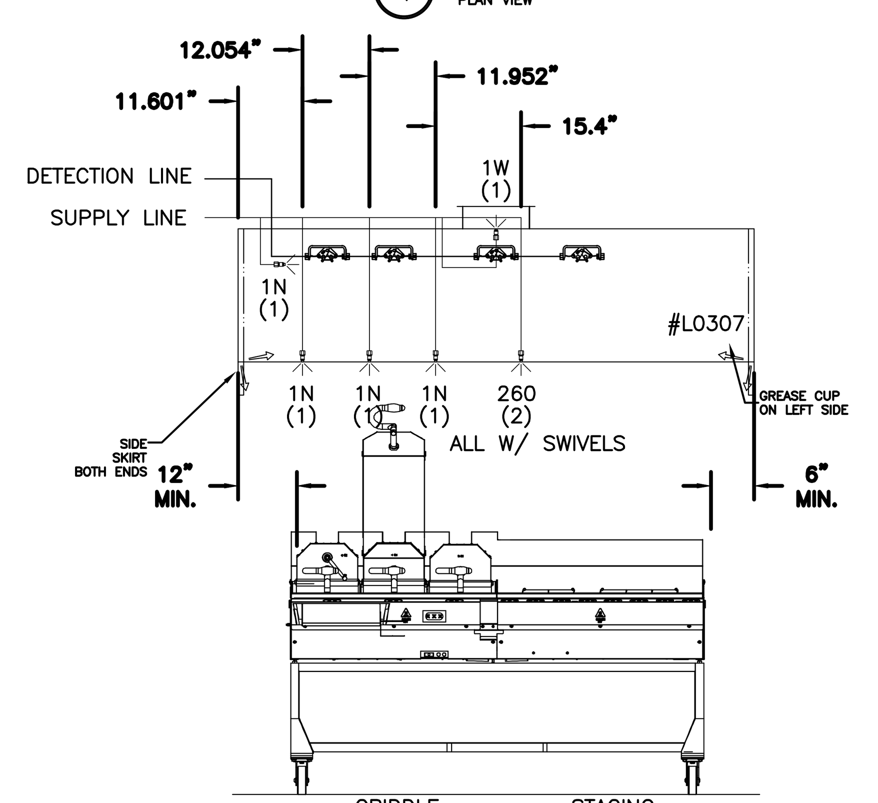

2 ITEM # L0307
ELEVATION VIEW (BACK VIEW)

GRIDDLE HOOD

Wendy's

IF YOU HAVE ANY QUESTIONS, PLEASE CONTACT SIMPLE MISSION(770.598.0531) OR BCOX@SIMPLEMISSION.ORG.

ELECTRICAL CONNECTION SCHEDULE

CONNECTION #	CONNECTION DESCRIPTION	FROM	TO
E1-H	120V, 15 AMP – HOOD LIGHT POWER – 3 WIRES	BUILDING SOURCE	HOOD #L0307
E2-H	FIELD CONNECTION FOR CANOPY LIGHTS & CJ FAN	HOOD #L0307	HOOD #L0502

CAPTURE JET CFM	CAPTURE JET STATIC PRESSURE
84	.25"

NOTE

HOOD IS LISTED AND LABELED FOR "0" CLEARANCE. TO BE CONSTRUCTED WITH DOUBLE END WALLS.

DUCTED CJ FAN DETAIL

DUCT & GRILLES PROVIDED & INSTALLED BY CONTRACTOR

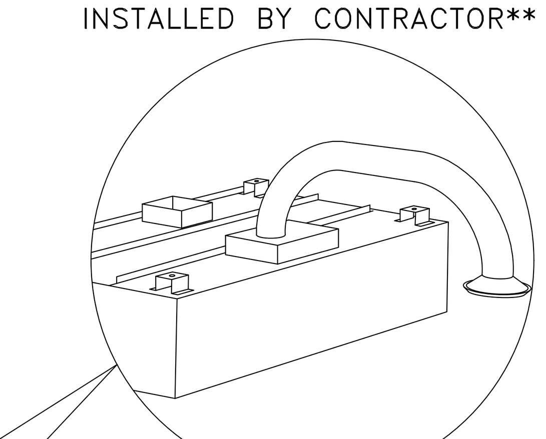

NOTE

T-STAT IS FACTORY PRE-SET FOR 95 DEGREES, IF SPACE CONDITIONS EXCEED 95 DEGREES WITHOUT COOKING TAKING PLACE, THEN A FIELD ADJUSTMENT OF THE T-STAT WILL BE REQUIRED BY PERSONNEL OTHER THAN HALTON. T-STAT IS A SAFETY INTERLOCK ONLY. IT IS NOT INTENDED AS A PRIMARY MEANS OF ENGAGING THE EXHAUST FAN.

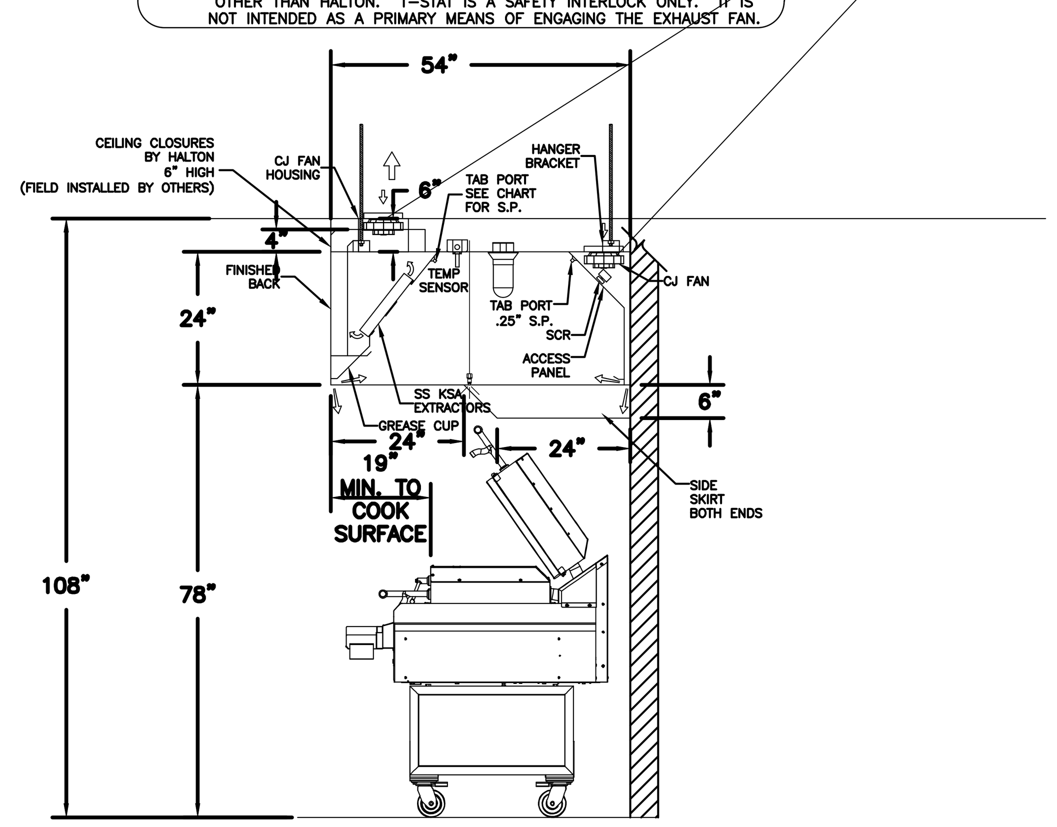

3 ITEM # L0307
SECTION VIEW

GENERAL SPECIFICATIONS

1– HOOD CONSTRUCTION AND DESIGN MEETS NFPA 96 AND UL 710 STANDARD.

2– HOOD IS NSF AND ETL LISTED UNDER THE FOLLOWING FILE NUMBER: ETL #3085193CLE-002

3– ALL INSTALLATION WORK IS TO BE PERFORMED BY QUALIFIED PERSONS AND IN ACCORDANCE WITH STATE AND LOCAL BUILDING CODE REQUIREMENTS.

4– THE INSTALLATION SHALL BE IN ACCORDANCE WITH NFPA 96, REMOVAL OF SMOKE AND GREASE LADEN VAPORS FROM COMMERCIAL COOKING EQUIPMENT.

5– ALL EXHAUST DUCTWORK AND TRANSITIONS ARE TO BE PROVIDED BY THE HVAC CONTRACTOR.

6– CLEARANCE FROM HOOD AND DUCTS TO COMBUSTIBLE MATERIAL SHALL BE PER APPLICABLE BUILDING CODES.

7– FOR PROPER OPERATION OF THE HOOD SYSTEM, IT IS THE RESPONSIBILITY OF THE GENERAL CONTRACTOR TO HAVE THE HOOD BALANCED AND TESTED TO ENSURE THAT THE EXHAUST AND SUPPLY REQUIREMENTS OF THE HOOD ARE MET.

INSTALLATION REQUIREMENTS

KITCHEN EQUIPMENT CONTRACTOR'S REQUIREMENTS

1– PROVIDE DRAWINGS TO APPROPRIATE TRADES REFERENCING UTILITY SERVICE AND COORDINATE FINAL CONNECTION.

2– DELIVER, ASSEMBLE AND INSTALL HALTON SYSTEM PER DRAWING.

3– FURNISH WIRING AND PLUMBING DIAGRAMS TO END USER.

4– THE K.E.C MUST INFORM HALTON OF ANY CHANGES IN EQUIPMENT OR BUILDING STRUCTURE. FIELD MODIFICATIONS ARE THE RESPONSIBILITY OF THE K.E.C.

5– IF HALTON MANUAL EXHAUST VOLUME DAMPERS ARE PROVIDED, THE K.E.C. IS RESPONSIBLE FOR THEIR INSTALLATION OR TO MAKE ARRANGEMENTS WITH OTHER TRADES FOR THEIR INSTALLATION.

ELECTRICAL CONTRACTOR'S REQUIREMENTS

1– PROVIDE AND CONNECT ALL REQUIRED VOLTAGES, CONNECTORS, WIRING, CONDUIT, ETC., PER NEC AND ALL APPLICABLE LOCAL CODES.

ELECTRICAL EQUIPMENT REQUIREMENTS

GLOBE LIGHT FIXTURE (ACCEPTS A19 LIGHT BULBS) 100 WATT MAX BULB= .83 AMP EA.

CAPTURE JET FAN= .72 AMP EA

ALL HOOD CIRCUITS ARE NOT TO EXCEED 15 AMP

LIGHT BULBS, IF REQUIRED, ARE TO BE PROVIDED BY OTHERS

CEILING CLOSURE PANELS

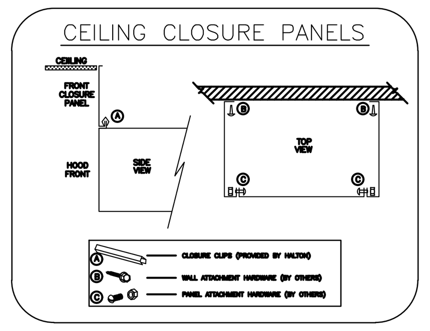

CEILING HEIGHT NOTE

IF HALTON COMPANY IS TO PROVIDE CEILING CLOSURE PANELS, THE EXACT DIMENSION OF THE FINISHED CEILING HEIGHT MUST BE PROVIDED PRIOR TO RELEASE.

FINISHED CEILING HEIGHT A.F.F.: ______________

Typical wiring of Capture-Jet fan
REMOTE SWITCH PANEL BY OTHERS

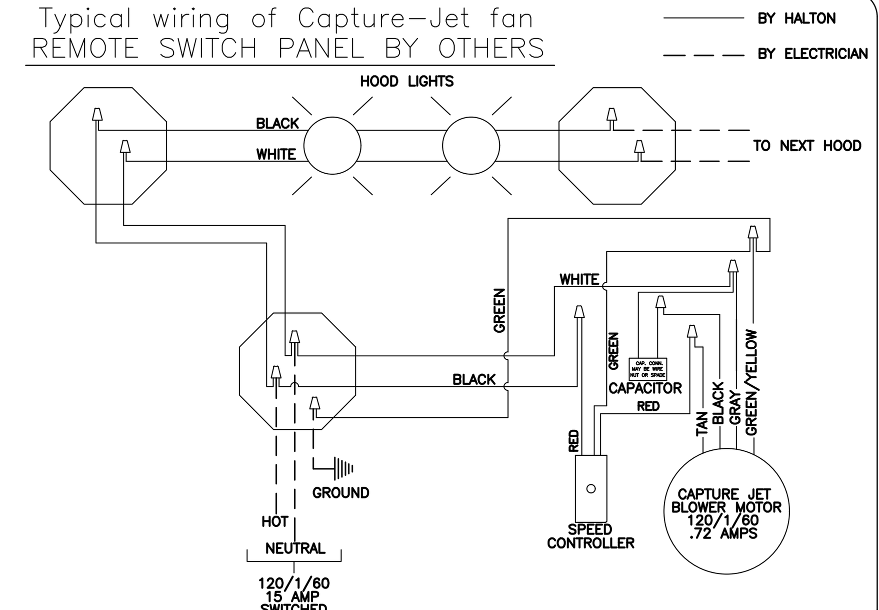

HANGER BRACKET LAYOUT

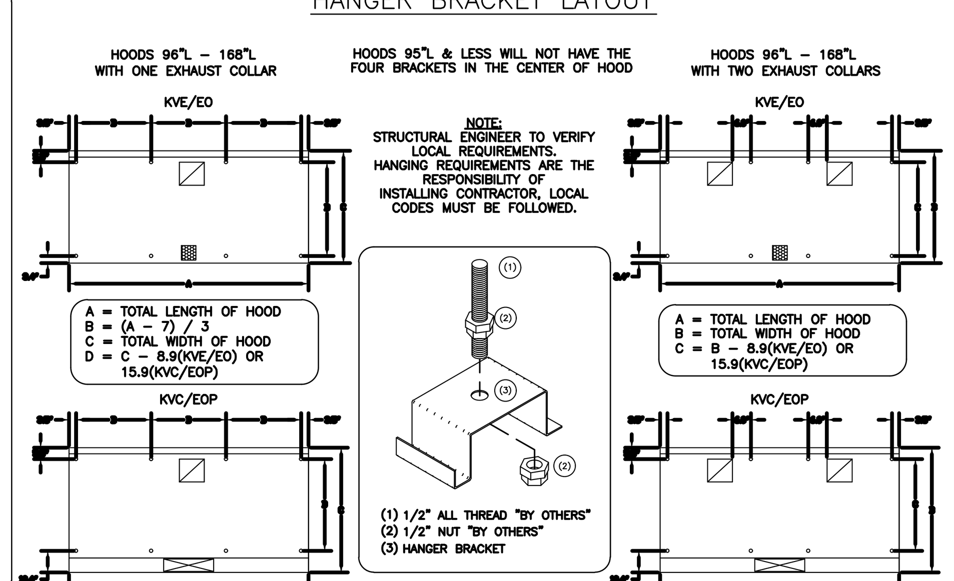

KSA GREASE EXTRACTOR

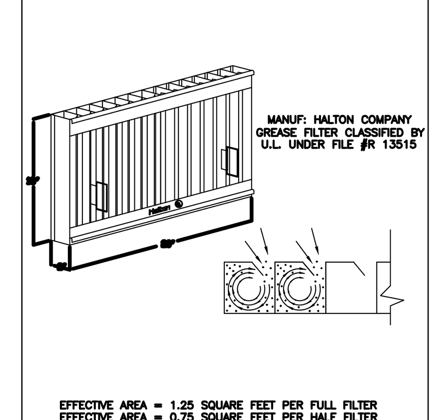

EFFECTIVE AREA = 1.25 SQUARE FEET PER FULL FILTER
EFFECTIVE AREA = 0.75 SQUARE FEET PER HALF FILTER
SEE HOOD SUBMITTAL DRAWINGS FOR FILTER QUANTITY

EXTRACTION OF CONTAMINANTS FROM THE EXHAUST AIR IS PROVIDED BY THE KSA MULTI-CYCLONE GREASE EXTRACTORS. EFFICIENT GREASE EXTRACTION IS ACHIEVED BY FORCING THE EXHAUST AIR TO SPIRAL CONTINUOUSLY IN THE SAME DIRECTION IN THE MULTIPLE CHAMBERS OF THE EXTRACTOR, THUS SEPARATING THE GREASE PARTICLES FROM THE AIR FLOW CENTRIFUGALLY.

HIGH EXTRACTION EFFICIENCY AND LOW PRESSURE LOSS OVER THE KSA REMAIN PRACTICALLY CONSTANT.

PERFORMANCE CRITERIA

OTHER MANUFACTURERS WISHING TO OFFER AN ALTERNATE TO THE SPECIFIED MANUFACTURER MUST APPLY FOR PERMISSION TO DO SO IN WRITING FROM THE OFFICE OF THE SPECIFYING CONSULTANT. APPLICATION MUST BE RECEIVED BY THE CONSULTANT AT LEAST TEN WORKING DAYS PRIOR TO THE BID DATE. ANY ALTERNATE SYSTEM MUST MEET CONSTRUCTION AND PERFORMANCE REQUIREMENTS AND EFFICIENCIES AS OUTLINED IN THIS SPECIFICATION.

REQUESTS FOR APPROVAL MUST INCLUDE GREASE FILTRATION PERFORMANCE DATA (MICRON SIZE VS. EXTRACTION EFFICIENCY) AND MANUFACTURERS OWN EXHAUST AIR FLOW CALCULATIONS BASED ON THE CONVECTIVE HEAT LOAD OF COOKING EQUIPMENT BENEATH THE HOOD.

EFFICIENCY COMPARISON DATA TO BE PERFORMED IN ACCORDANCE WITH THE MOST CURRENT ASTM STANDARD F1704 AND INCLUDE RESULTS FOR THE REQUIRED CAPTURE AND CONTAINMENT EXHAUST AIR FLOW IN ACCORDANCE WITH THE "TEST METHOD TO DETERMINE THE THRESHOLD OF CAPTURE AND CONTAINMENT." DATA MUST INCLUDE THERMAL IMAGING RESULTS VALIDATING CONFORMANCE TO ASTM F1704 AND SUPPLY AIR TEMPERATURE REQUIREMENT OF 74°F.

MAKE UP AIR WILL BE CALCULATED SO THAT THE SAME AMOUNT OF AIR WILL BE TAKEN FROM THE ZONE AS IS REQUIRED BY THE SPECIFIED SYSTEM. AN ADDITIONAL LOAD CANNOT BE PLACED ON THE KITCHEN HVAC SYSTEM.

MANUFACTURER MUST PROVIDE A WRITTEN GUARANTEE OF PERFORMANCE, ENSURING THE SPECIFYING ENGINEER THAT THE SYSTEM WILL PERFORM TO THE ENGINEER'S SATISFACTION WHEN INSTALLED AND BALANCED ACCORDING TO DESIGN AIR FLOWS AND RESULTS OF ASTM STANDARD F1704 TEST. (AS DETERMINED BY TAB PORTS AND PRESSURE VS. AIR FLOW CURVES.) CONSULTANT RESERVES THE RIGHT TO REJECT ANY SYSTEM WHICH, WHEN INSTALLED, DOES NOT PROVIDE CAPTURE AND CONTAINMENT AT THE THRESHOLD FLOW RATE DETERMINED IN ASTM F1704. REJECTED SYSTEM MUST BE REPLACED WITH SPECIFIED SYSTEM, WITH ALL REPLACEMENT COSTS PAID BY MANUFACTURER OF REJECTED SYSTEM.

ANY CHANGES IN THE SPECIFIED SIZING OF POWER WIRING, FAN SIZE, HORSEPOWER REQUIREMENTS, OR GAS LINES DUE TO THE USE OF ANY SYSTEM OTHER THAN THAT WHICH IS SPECIFIED IS THE RESPONSIBILITY OF THE ALTERNATE HOOD MANUFACTURER, AND MUST BE COORDINATED BY THE HOOD MANUFACTURER AND CONTRACTORS INVOLVED.

FOR REFERENCE ONLY

THIS DRAWING MUST BE CHECKED, SIGNED AND RETURNED TO THE APPROPRIATE FACTORY. PLEASE VERIFY THE FOLLOWING:

1. ALL DIMENSIONAL INFORMATION, MOUNTING POSITIONS AND CLEARANCES.
2. THE LOCATION AND TYPE OF COOKING EQUIPMENT.

NOTE TO APPROVER

ANY CHANGES IN COOKING EQUIPMENT SUCH AS INCREASED ENERGY INPUTS OR EQUIPMENT POSITION MAY AFFECT EXHAUST AIRFLOW. HALTON MUST BE NOTIFIED IF ANY OF THESE CHANGES OCCUR, A RECALCULATION EXHAUST AIRFLOW MAY BE REQUIRED.

☐ REVISE AND RESUBMIT

APPROVED FOR FABRICATION

☐ WITH NO CHANGES ☐ WITH CHANGES AS NOTED

APPROVED BY ______ DATE ______

COMPLIES WITH LATEST NFPA-96

MAIL APPROVED DRAWINGS TO APPROPRIATE FACTORY BELOW: WEBSITE: WWW.HALTONCOMPANY.COM

HALTON CO. (CANADA)
1021 BREVIK PLACE
MISSISSAUGA, ON L4W 3R7
1-905-624-0301

HALTON CO. (USA)
101 INDUSTRIAL DRIVE
SCOTTSVILLE, KY 42164
1-270-237-5600

REV.	REVISION DESCRIPTION	BY	DATE
8	UPDATED PROJECT NAME	M.H.	10.04.17
9	DIMENSIONS ANSUL, ADDED NOTE AND SIMPLE MISSIONS LOGO	WU	05.01.18
10	ADDED SIDE SKIRTS	WU	06.28.18
11	REMOVED KFR TOOL DETAIL FROM DRAWINGS	WU	03.25.19
5	REMOVED STUD LOCATION NOTES AND DETAILS	WU	12.05.16
6	NO CHANGE	WU	03.27.17
7	REVISED ANSUL	WU	05.15.17

PROJECT: WENDY'S SINGLE LINE NGK L0307

LOCATION:

DRAWN BY: M.H. DATE: 01.08.16

SCALE: NOT TO SCALE

CONSULTANT:

Halton

DRAWING TITLE: HOOD DETAILS

DRAWING No.: U16-018

REV. NO.: 11 SHEET NO.: 2 of 3

SITE NUMBER:	12281
BASE MDL:	SMART 55 - SQUARE 2017
ASSET TYPE:	FRANCHISEE
CLASSIFICATION:	NEW
OWNER:	WENSPOK
BASE VERSION:	2017
UPGRADE CLASSIFICATION:	NEW BUILD
PROJECT YEAR:	2020
FURNITURE PACKAGE:	2016 V3
DRAWING RELEASE	JANUARY 2020

Russell C. Page
ARCHITECTS
204 N. Division Street, Suite 'E'
Spokane, WA 99202
(509) 467-9748 Fx: (509) 467-9817

PROJECT TYPE: NEW SMART 55 SQE

Wendy's

HIGHWAY 95
PONDERAY, ID 83852

REV.	DATE	DESCRIPTION
△		
△		

ISSUE DATE: 5-28-2020

PROJECT NUMBER: 20-113

DRAWN BY: HALTON

CHECKED BY: HALTON

SEAL

LICENSED ARCHITECT AR 984311
8/10/20
RUSSELL C. PAGE
STATE OF IDAHO

SHEET NAME

HOOD DETAILS

SHEET NUMBER

H1.1

8/10/2020, 12:43 PM, N:\Home\20-113 WENDYS PONDERAY\80_SMART-1.0-55-SQUARE_H1_X_Hood Details-Halton.dwg, user

EXHAUST FAN INFORMATION – Job#3090801

FAN UNIT NO.	TAG	FAN UNIT MODEL #	CFM	ESP.	RPM	H.P.	B.H.P.	Ø	VOLT	FLA	DISCHARGE VELOCITY	WEIGHT (LBS.)	SONES
1	GRIDDLE	DU85H	1150	1.250	1243	0.750	0.3810	1	208	5.2	364 FPM	97	13.4
2	FRYER	DU85H	1176	1.250	1250	0.750	0.3870	1	208	5.2	372 FPM	97	13.5
3	BATH	DR12H	300	0.350	1115	0.180	0.0620	1	115	2.4		46	5.2

FAN ACCESSORIES

FAN UNIT NO.	TAG	EXHAUST			SUPPLY			
		GREASE CUP	GRAVITY DAMPER	WALL MOUNT	SIDE DISCHARGE	GRAVITY DAMPER	MOTORIZED DAMPER	WALL MOUNT
1	GRIDDLE	YES						
2	FRYER	YES						
3	BATH		YES					

FAN OPTIONS

FAN UNIT NO.	TAG	OPTION (Qty. – Descr.)
1	GRIDDLE	1 – Grease Box
		1 – ECM Wiring Package-Exhaust – Manual or 0-10VDC Reference Speed Control (NIDEC Motor)
		1 – Fan Base Ceramic Seal – Installed At Plant – For Grease Ducts
2	FRYER	1 – Grease Box
		1 – ECM Wiring Package-Exhaust – Manual or 0-10VDC Reference Speed Control (NIDEC Motor)
		1 – Fan Base Ceramic Seal – Installed At Plant – For Grease Ducts
3	BATH	1 – I 12-BDD Damper

CURB ASSEMBLIES

NO.	ON FAN	TAG	WEIGHT	ITEM	SIZE
1	# 1	GRIDDLE	41 LBS	Curb	23.000"W x 23.000"L x 22.000"H Vented Hinged
2	# 2	FRYER	41 LBS	Curb	23.000"W x 23.000"L x 22.000"H Vented Hinged
3	# 3	BATH	16 LBS	Curb	17.500"W x 17.500"L x 14.000"H

FAN #3 DR12H – EXHAUST FAN (BATH)

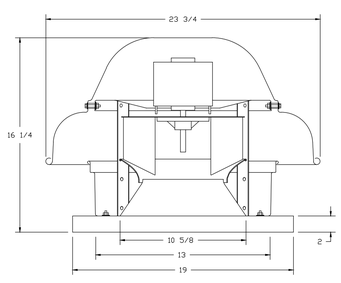

FEATURES:

- DIRECT DRIVE CONSTRUCTION (NO BELTS/PULLEYS)
- ROOF MOUNTED FANS
- UL705
- SAFETY DISCONNECT
- STANDARD BIRD SCREEN
- SPEED CONTROL

OPTIONS

I 12-BDD DAMPER

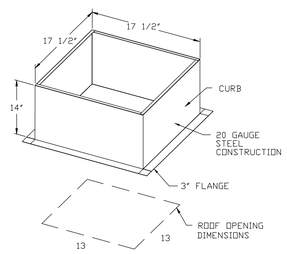

PITCHED CURBS ARE AVAILABLE FOR PITCHED ROOFS.

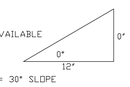

SPECIFY PITCH:
EXAMPLE: 7/12 PITCH = 30° SLOPE

BACKDRAFT DAMPER INSTALLATION

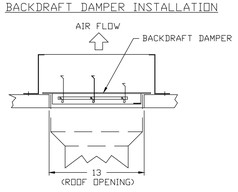

FANS #1 (GRIDDLE), #2 (FRYER) – DU85H EXHAUST FAN

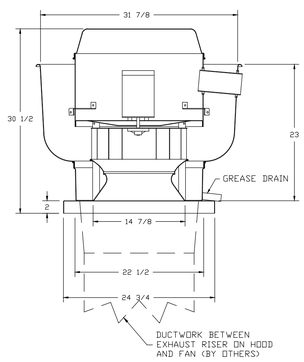

FEATURES:

- DIRECT DRIVE CONSTRUCTION (NO BELTS/PULLEYS)
- ROOF MOUNTED FANS
- RESTAURANT MODEL
- UL705 AND UL762 AND ULC-S645
- VARIABLE SPEED CONTROL
- INTERNAL WIRING
- WEATHERPROOF DISCONNECT
- THERMAL OVERLOAD PROTECTION (SINGLE PHASE)
- HIGH HEAT OPERATION 300°F (149°C)
- GREASE CLASSIFICATION TESTING

NORMAL TEMPERATURE TEST
EXHAUST FAN MUST OPERATE CONTINUOUSLY WHILE EXHAUSTING AIR AT 300°F (149°C) UNTIL ALL FAN PARTS HAVE REACHED THERMAL EQUILIBRIUM, AND WITHOUT ANY DETERIORATING EFFECTS TO THE FAN WHICH WOULD CAUSE UNSAFE OPERATION.

ABNORMAL FLARE-UP TEST
EXHAUST FAN MUST OPERATE CONTINUOUSLY WHILE EXHAUSTING BURNING GREASE VAPORS AT 600°F (316°C) FOR A PERIOD OF 15 MINUTES WITHOUT THE FAN BECOMING DAMAGED TO ANY EXTENT THAT COULD CAUSE AN UNSAFE CONDITION.

OPTIONS

GREASE BOX
ECM WIRING PACKAGE-EXHAUST – MANUAL OR 0-10VDC REFERENCE SPEED CONTROL (NIDEC MOTOR)
FAN BASE CERAMIC SEAL – INSTALLED AT PLANT – FOR GREASE DUCTS

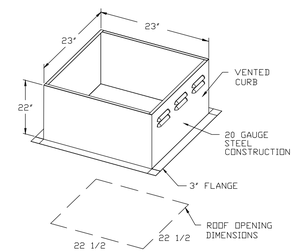

PITCHED CURBS ARE AVAILABLE FOR PITCHED ROOFS.

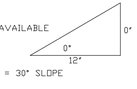

SPECIFY PITCH:
EXAMPLE: 7/12 PITCH = 30° SLOPE

FAN INFORMATION

IF YOU HAVE ANY QUESTIONS, PLEASE CONTACT SIMPLE MISSION(770.598.0531) OR BCOX@SIMPLEMISSION.ORG.

LDI

JOB WENDYS – Single Line	
LOCATION PROTOTYPE	
DATE 1/17/2018	JOB # 3273404
DWG # 1	DRAWN BY RDR
REV.	SCALE 3/8" = 1'-0"

THIS DRAWING MUST BE CHECKED, SIGNED AND RETURNED TO THE APPROPRIATE FACTORY. PLACE ORDER WITH THE COMPANY.
1. ALL DIMENSIONAL INFORMATION, MOUNTING POSITIONS AND CLEARANCES.
2. THE LOCATION AND TYPE OF COOKING EQUIPMENT.

NOTE TO APPROVER
ANY CHANGES TO COOKING EQUIPMENT SUCH AS INCREASED ENERGY INPUTS OR EQUIPMENT POSITION MAY AFFECT EXHAUST AIRFLOW. HALTON MUST BE NOTIFIED IF ANY OF THESE CHANGES OCCUR. A RECALCULATION EXHAUST AIRFLOW MAY BE REQUIRED.

☐ REVISE AND RESUBMIT
APPROVED FOR FABRICATION
☐ WITH NO CHANGES ☐ WITH CHANGES AS NOTED
APPROVED BY DATE

MAIL APPROVED DRAWINGS TO APPROPRIATE FACTORY BELOW: WEBSITE: WWW.HALTONCOMPANY.COM

HALTON CO. (USA)
101 INDUSTRIAL DRIVE
SCOTTSVILLE, KY 42164
1-270-237-5600

☒

HALTON CO. (CANADA)
1021 BREVIK PLACE
MISSISSAUGA, ON L4W 3R7
1-905-624-0301

☐

REV.	REVISION DESCRIPTION	BY	DATE
8	UPDATED PROJECT NAME	M.H.	10.04.17
9	UPDATED FANS, ADDED NOTE AND SIMPLE MISSIONS LOGO	WJ	05.01.18
10	NO CHANGE	WJ	06.28.18
11	NO CHANGE	WJ	03.25.19
5	NO CHANGE	WJ	12.5.16
6	REVISED ROOF CURB DIMENSIONS	WJ	03.27.17
7	NO CHANGE	WJ	05.15.17

PROJECT: WENDY'S SINGLE LINE NGK
LOCATION:
DRAWN BY: M.H. DATE: 01.08.16
SCALE: NOT TO SCALE
CONSULTANT:
Halton

DRAWING TITLE: HOOD DETAILS
DRAWING No.: U16–018
REV. NO.: 11 SHEET NO.: 3 of 3

SITE NUMBER:	12281
BASE MDL:	SMART 55 - SQUARE 2017
ASSET TYPE:	FRANCHISEE
CLASSIFICATION:	NEW
OWNER:	WENSPOK
BASE VERSION:	2017
UPGRADE CLASSIFICATION:	NEW BUILD
PROJECT YEAR:	2020
FURNITURE PACKAGE:	2016 V3
DRAWING RELEASE	JANUARY 2020

Russell C. Page ARCHITECTS
204 N. Division Street, Suite 'E'
Spokane, WA 99202
(509)467-9748 Fx:(509)467-9817

PROJECT TYPE: NEW SMART 55 SQE

Wendy's
HIGHWAY 95
PONDERAY, ID 83852

REV. DATE DESCRIPTION

ISSUE DATE: 5-28-2020
PROJECT NUMBER: 20-113
DRAWN BY: HALTON
CHECKED BY: HALTON

SEAL
LICENSED ARCHITECT AR 984311
RUSSELL C. PAGE
STATE OF IDAHO

SHEET NAME
HOOD DETAILS

SHEET NUMBER
H1.3

8/10/2020, 12:41 PM, N:\Home\20-113 WENDYS PONDERAY\80_SMART-1.0-55-SQUARE_H1_X_Hood Details-Halton.dwg, user

ELECTRICAL CONTRACTOR: THIS IS THE WIRING DETAILS INSIDE THE SMART BREAKER CONTROL PANEL SECTION INCLUDED IN THE MODULAR PANEL SYSTEM. MECHANICAL CONTRACTOR TO ENSURE JUMPER IS IN CORRECT POSITION TO DISPLAY EXTERNAL SENSOR TEMPERATURE READING. REFER TO MANUFACTURER'S IOM FOR ADDITIONAL INFORMATION. (TYP)

SEQUENCE OF OPERATION - INTERIOR LIGHTING CONTROLS
SYSTEM DESIGNED TO COMPLY WITH LOCAL JURISDICTION.

1. DINING ROOM - GENERAL LIGHTING:
   a. SYSTEM USES A MANUAL BI-LEVEL SWITCH, AND AUTOMATIC SHUT OFF.
   b. GENERAL OPERATIONAL STANDARD IS FOR THE MANAGER TO TURN ON GENERAL LIGHTING AT 100% DURING MORNING PREPARATION AND AT CLEAN UP.
   c. GENERAL LIGHTS ARE TURNED DOWN 90% (10%) APPROXIMATELY 30 MINUTES PRIOR TO DINING ROOM OPENING.
   d. THE LIGHTING CONTROL SYSTEM PROVIDES THE REQUIRED AUTOMATIC OFF AT DRIVE THROUGH CLOSING PLUS 1 HOUR.

2. DINING ROOM - DECORATIVE LIGHTING:
   a. GENERAL OPERATIONAL STANDARD IS TO TURN OFF DECORATIVE LIGHTING DURING MORNING PREPARATION AND AFTER DINING ROOM IS CLOSED.
   b. OPERATOR CAN TURN ON OR OFF DECORATIVE LIGHTING USING MANUAL SWITCH.
   c. THE LIGHTING CONTROL SYSTEM PROVIDES THE REQUIRED AUTOMATIC OFF AT DRIVE THROUGH CLOSING PLUS 2 HOURS.

3. KITCHEN:
   a. MANUAL SWITCH REQUIRED AND USED FOR KITCHEN LIGHTS.
   b. OPERATOR CAN TURN ON/OFF THE KITCHEN LIGHTING USING MANUAL SWITCH.
   c. THE LIGHTING CONTROL PROVIDES THE REQUIRED AUTOMATIC OFF. THE LIGHTING CONTROL SYSTEM TURNS OFF THE LIGHTING AT DRIVE THROUGH CLOSING PLUS 2 HOURS.

4. RESTROOMS:
   a. LIGHTS ARE CONTROLLED BY MOTION SENSOR.
   b. RESTROOM EXHAUST FAN RUNS DURING ALL OCCUPIED TIME PERIODS.
   c. MOTION SENSOR IS SET TO TURN OFF LIGHTS AFTER 30 MINUTES WITH NO MOTION DETECTED.
   d. A CEILING MOUNTED SENSOR ALONG WITH WALL SWITCH IS USED TO CONTROL THE LIGHTS.

5. OFFICE AREA:
   a. LIGHTS ARE CONTROLLED BY WALL MOUNTED MOTION SENSOR.
   b. A WALL SWITCH IS PROVIDED AS WELL TO OVERRIDE THE SENSOR.
   c. MOTION SENSOR IS SET TO TURN OFF LIGHTS AFTER 30 MINUTES OF INACTIVITY.

6. WALK IN COOLER / FREEZER / DRY STORAGE :
   a. LIGHTS IN THE COOLER, FREEZER, AND DRY STORAGE ARE CONTROLLED BY A CEILING MOTION SENSOR IN EACH AREA.
   b. MOTION SENSOR IS SET TO TURN OFF LIGHTS AFTER 30 MINUTES OF INACTIVITY.
   c. NO WALL SWITCH IS PROVIDED.
   d. NO LIGHTS ARE USED IN THESE AREAS.

7. EXTERIOR PARKING LOT LIGHTS :
   a. EXTERIOR LIGHTS ARE CONTROLLED VIA EXTERIOR PHOTOCELL, ASTRONOMICAL TIME CLOCK, RESTAURANT OPEN SWITCH, AND OVERRIDE BUTTON.
   b. EXTERIOR LIGHTS WILL NOT TURN ON UNLESS IT IS DARK AND THE RESTAURANT OPEN SWITCH IS ACTIVATED OR THE MANUAL OVERRIDE BUTTON IS PRESSED.
   c. GENERAL OPERATIONAL STANDARD IS TO HAVE RESTAURANT OPEN SWITCH IN THE OFF POSITION UNLESS THE DRIVE THROUGH WINDOW IS OPEN.
   d. THE LIGHTING CONTROL PROVIDES THE REQUIRED AUTOMATIC OFF. THE SYSTEM IS SET TO AUTOMATICALLY TURN OFF THE EXTERIOR LIGHTS AT PICK UP WINDOW CLOSE PLUS 2 HOURS.

8. BUILDING SIGNS / EXTERIOR SIGNS:
   a. EXTERIOR BUILDING SIGNS, EXTERIOR SIGNS ARE CONTROLLED VIA EXTERIOR PHOTOCELL, ASTRONOMICAL TIME CLOCK, RESTAURANT OPEN SWITCH, AND OVERRIDE BUTTON.
   b. EXTERIOR LIGHTS WILL NOT TURN ON UNLESS IT IS DARK AND THE RESTAURANT OPEN SWITCH IS ACTIVATED OR THE MANUAL OVERRIDE BUTTON IS PRESSED.
   c. GENERAL OPERATIONAL STANDARD IS TO HAVE THE SIGNS OFF UNLESS THE RESTAURANT IS OPEN (DRIVE THROUGH WINDOW IS OPEN).
   d. THE LIGHTING CONTROL PROVIDES THE REQUIRED AUTOMATIC OFF. THE SYSTEM IS SET TO AUTOMATICALLY TURN OFF THE EXTERIOR LIGHTS AT PICK UP WINDOW CLOSE PLUS 2 HOURS.

9. EXTERIOR MENU BOARD / PRE-SALE BOARD:
   a. EXTERIOR MENU BOARD AND PRE-SALE BOARD (NON-DIGITAL DRIVE THROUGH SIGNS) ARE CONTROLLED BY ASTRONOMICAL TIME CLOCK, RESTAURANT OPEN SWITCH, AND OVERRIDE BUTTON.
   b. MENU BOARD SIGNS ARE ON WHEN THE RESTAURANT OPEN SWITCH IS ACTIVATED.
   c. GENERAL OPERATIONAL STANDARD IS TO HAVE THE RESTAURANT OPEN SWITCH IN THE OFF POSITION UNLESS THE DRIVE THROUGH WINDOW IS OPEN.
   d. THE LIGHTING CONTROLLER PROVIDES THE REQUIRED AUTOMATIC OFF. THE SYSTEM IS SET TO AUTOMATICALLY TURN OFF THE EXTERIOR LIGHTS AT PICK UP WINDOW CLOSE PLUS 2 HOURS.

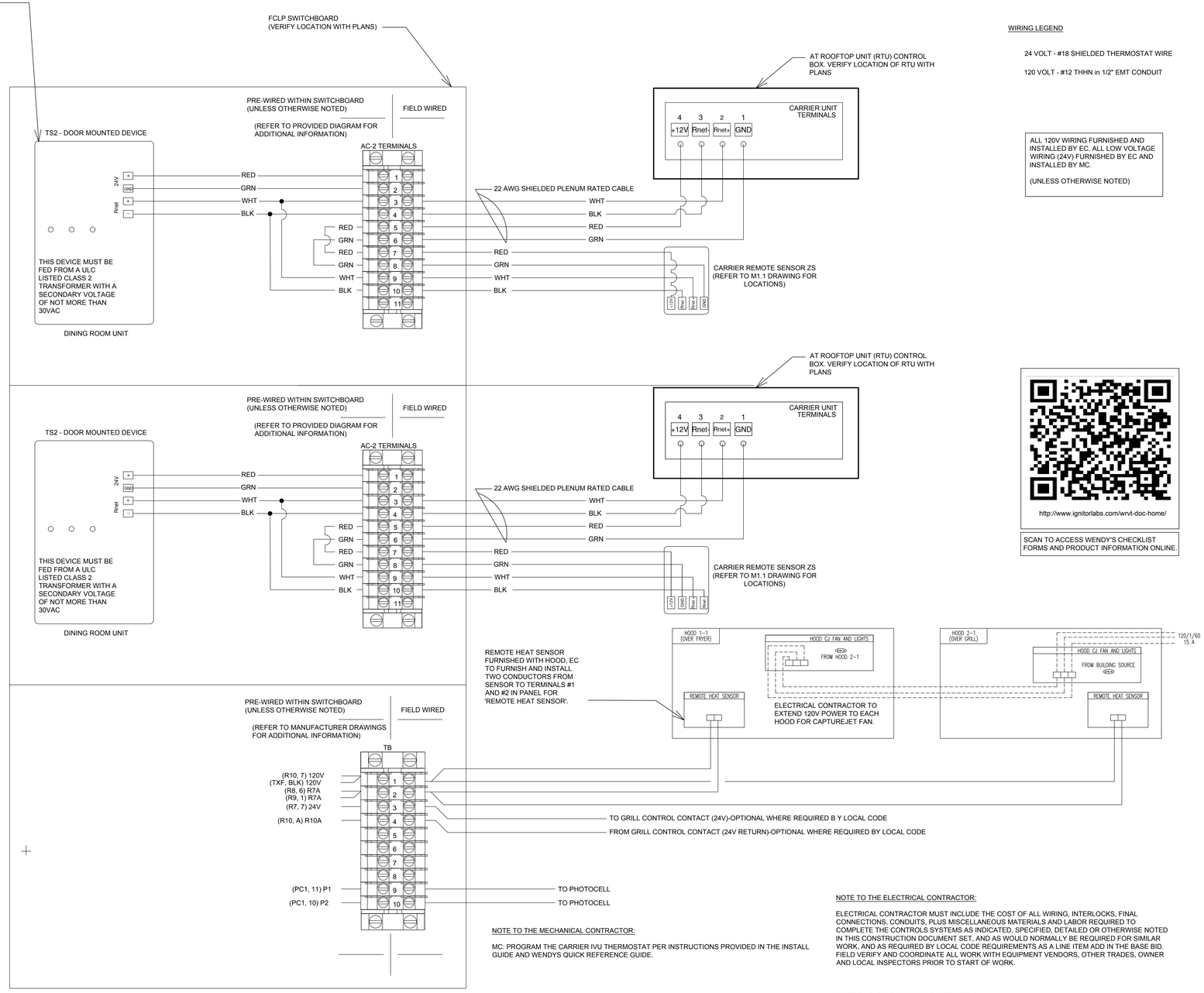

WIRING LEGEND

24 VOLT - #18 SHIELDED THERMOSTAT WIRE

120 VOLT - #12 THHN in 1/2" EMT CONDUIT

ALL 120V WIRING FURNISHED AND INSTALLED BY EC. ALL LOW VOLTAGE WIRING (24V) FURNISHED BY EC AND INSTALLED BY MC.

(UNLESS OTHERWISE NOTED)

http://www.ignitorlabs.com/wrvt-doc-home/

SCAN TO ACCESS WENDY'S CHECKLIST FORMS AND PRODUCT INFORMATION ONLINE.

NOTE TO THE MECHANICAL CONTRACTOR:

MC: PROGRAM THE CARRIER IVU THERMOSTAT PER INSTRUCTIONS PROVIDED IN THE INSTALL GUIDE AND WENDYS QUICK REFERENCE GUIDE.

NOTE TO THE ELECTRICAL CONTRACTOR:

ELECTRICAL CONTRACTOR MUST INCLUDE THE COST OF ALL WIRING, INTERLOCKS, FINAL CONNECTIONS, CONDUITS, PLUS MISCELLANEOUS MATERIALS AND LABOR REQUIRED TO COMPLETE THE CONTROLS SYSTEMS AS INDICATED, SPECIFIED, DETAILED OR OTHERWISE NOTED IN THIS CONSTRUCTION DOCUMENT SET, AND AS WOULD NORMALLY BE REQUIRED FOR SIMILAR WORK, AND AS REQUIRED BY LOCAL CODE REQUIREMENTS AS A LINE ITEM ADD IN THE BASE BID. FIELD VERIFY AND COORDINATE ALL WORK WITH EQUIPMENT VENDORS, OTHER TRADES, OWNER AND LOCAL INSPECTORS PRIOR TO START OF WORK.

NOTE TO THE MECHANICAL CONTRACTOR:

MECHANICAL CONTRACTOR MUST INCLUDE THE COST OF ALL PROGRAMMING, COMMISSIONING, CONTROLS, ETC. PLUS MISCELLANEOUS MATERIALS AND LABOR REQUIRED TO COMPLETE THE CONTROLS SYSTEMS AS INDICATED, SPECIFIED, DETAILED OR OTHERWISE NOTED IN THIS CONSTRUCTION DOCUMENT SET, AND AS WOULD NORMALLY BE REQUIRED FOR SIMILAR WORK, AND AS REQUIRED BY LOCAL CODE AS A LINE ITEM ADD IN THE BASE BID. FIELD VERIFY AND COORDINATE ALL WORK WITH EQUIPMENT VENDORS, OTHER TRADES, OWNER AND LOCAL INSPECTORS PRIOR TO START OF WORK.

SITE NUMBER:	12281
BASE MDL:	SMART 55 - SQUARE 2017
ASSET TYPE:	FRANCHISEE
CLASSIFICATION:	NEW
OWNER:	WENSPOK
BASE VERSION:	2017
UPGRADE CLASSIFICATION:	NEW BUILD
PROJECT YEAR:	2020
FURNITURE PACKAGE:	2016 V3
DRAWING RELEASE	JANUARY 2020

Russell C. Page ARCHITECTS

THE INFORMATION INDICATED ON THIS DRAWING WAS COMPILED BY CHREMSHOCK USING SEVERAL VENDOR SOURCES. SHREMSHOCK DOES NOT WARRANT THE ACCURACY OF THE INFORMATION PROVIDED BY OTHERS.

ZONING OF PROPERTY DEPICTED ON THIS PLAN IS THE RESPONSIBILITY OF THE OWNER. ZONING INFORMATION WAS NOT PROVIDED TO US AT THE TIME OF PREPARATION OF THIS PLAN.

ALL DIMENSIONS, ELEVATIONS, AND CONDITIONS TO BE VERIFIED IN THE FIELD BY CONTRACTOR PRIOR TO CONSTRUCTION. ANY DISCREPANCIES TO BE REPORTED TO ARCHITECT PRIOR TO CONSTRUCTION.

INFORMATION WITH EACH MANUFACTURER/VENDOR PRIOR TO USE.

PROJECT TYPE: NEW SMART 55 SQE

Wendy's®

HIGHWAY 95
PONDERAY, ID 83852

REV.	DATE	DESCRIPTION
△		
△		

ISSUE DATE: 5-28-2020

PROJECT NUMBER: 20-113

DRAWN BY: MM&TON/CARRIER

CHECKED BY: HALTON/CARRIER

SEAL

LICENSED ARCHITECT AR 984311
RUSSELL C. PAGE
STATE OF IDAHO

SHEET NAME

WIRING/SEQUENCE CARRIER

SHEET NUMBER

W1.1

8/10/2020, 12:43 PM, N:\Home\20-113 WENDYS PONDERAY\80_SMART-1-0-55-SQUARE_V1_1_Control Wiring.dwg, user

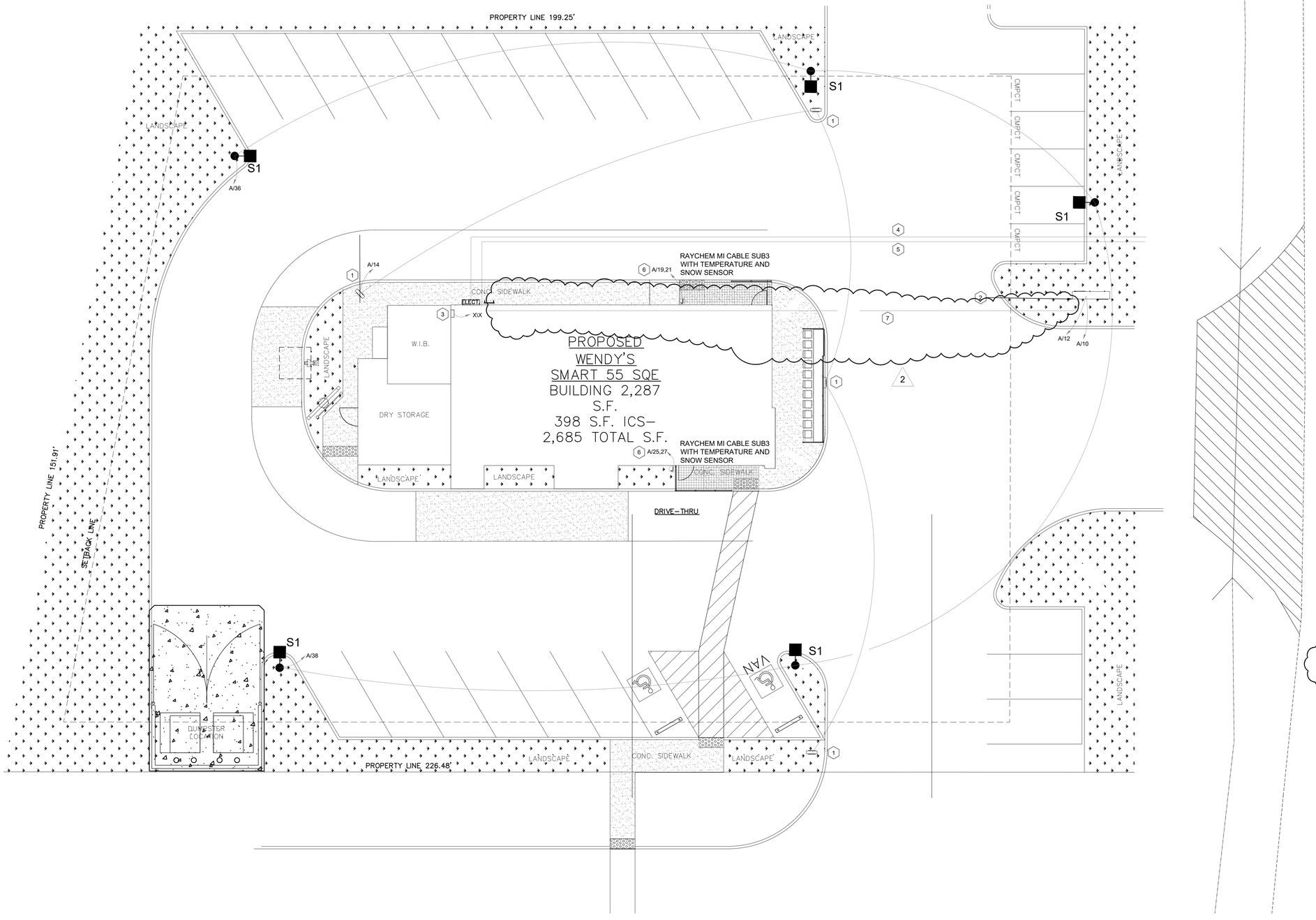

GENERAL NOTES

1. ALL EXTERIOR LIGHTING SHALL BE CONTROLLED WITH ASTRONOMICAL TIMECLOCK CAPABLE OF RETAINING PROGRAMMING FOR 10 HOURS IN THE EVENT OF POWER FAILURE
2. ALL CIRCUITS SHALL BE 1"C 3 #8, #10 GND UNLESS OTHERWISE INDICATED

GENERAL NOTES

J JUNCTION BOX

POLE MOUNTED LIGHT FIXTURE

KEYED NOTES

1. DIRECTIONAL SIGN
2. PYLON SIGN
3. SNOW MELT CONTROL PANEL
4. COORDINATE WITH AVISTA TO PROVIDE POWER TO THE BUILDING. PROVIDE ALL TRENCHING, BACKFILL, CONDUIT ETC. AR REQUIRED
5. COORDINATE WITH LOCAL TELECOM TO PROVIDE TELEPHONE/INTERNET SERVICE TO BUILDING. PROVIDE ALL TRENCHING, BACKFILL, CONDUIT ETC. AS REQUIRED
6. 3"C - 2 #10, #10 GND
7. 1"C (1) CAT 6 CABLE FROM PYLON SIGN TO SERVER IN OFFICE FOR READER BOARD

2

SITE NUMBER:	00000
BASE MDL:	SMART 55 - SQUARE 2019
ASSET TYPE:	COMP./FRAN
CLASSIFICATION:	NEW
OWNER:	OWNER NAME
BASE VERSION:	2019
UPGRADE CLASSIFICATION:	NEW BUILD
PROJECT YEAR:	2019
FURNITURE PACKAGE:	2016 V3
DRAWING RELEASE	JANUARY 2020

WEILER ENGINEERING
P.O. BOX 832
VERADALE, WA 99037
PH. (509) 998-3068

PROJECT TYPE: NEW
SMART 55 - SQUARE

HIGHWAY 95
PONDERAY, ID 83852

REV.	DATE	DESCRIPTION
△	01-20-2020	JANUARY SPRINT 2020
1	01-14-2020	ADDED SNOW MELT CKT
2	11-04-2020	ADDED DATA TO PYLON
	-	

ISSUE DATE: 08/14/2020

PROJECT NUMBER: --

DRAWN BY: dw

CHECKED BY: dw

SEAL

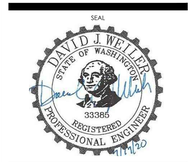

SHEET NAME

ELECTRICAL SITE PLAN

SHEET NUMBER

E1.0

11/4/2020, 9:07 AM, E:\Lavan\Projects\Wendys\ELECTRICAL\SMART 55 SQUARE (1.0) - MEP - DWG - JAN 2020\90_SMART-1.0-55-SQUARE_E1_0_Electrical Site Plan.dwg, Owner

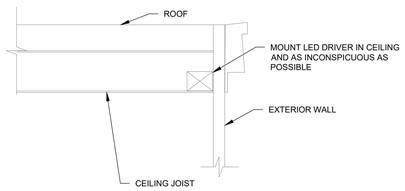

LED DRIVER MOUNTING DETAIL (3)

NOT TO SCALE

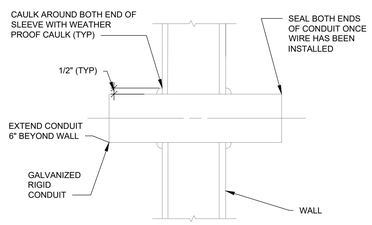

CONDUIT WALL PENETRATION (2)

NOT TO SCALE

LIGHT FIXTURE SCHEDULE

CONTACT WENDY'S APPROVED LIGHTING SUPPLIER

FIXTURE	DESCRIPTION	MANUFACTURER	FIXTURE NUMBER	FIXTURE WATTAGE	VOLTAGE
AH	RECESSED CAN HOUSING FOR 6" LED LIGHTS. DIRECT CONNECT.	NORA	NHIC-172SAT	NA	120
		NORA	NHIC-6SJRFAT	NA	120
A1	LED - DOWNLIGHT. 3000K. DIRECT CONNECT LED. WHITE	BOLT	BEBRK-LED56-BW-3-ECO	12	120
		MAXLITE	RR6130W-L9	11	120
A2	LED - AIMABLE DOWNLIGHT. 3000K. DIRECT CONNECT LED. WHITE.	MAXLITE	RRA6130W	11	120
A7	LED - 5" CYLINDER LIGHT, 3000K, INTEGRAL LED, BLACK	PROGRESS	P5174-31/30K	17	120
B4	2x2 LED FLAT PANEL LED. 4000K. WHITE BACK OF HOUSE ONLY	BOLT	BELEDPNL2X2-40W-4K	40	120
		MAXLITE	MLFP22EF3041/V3	30	120
		BARRON	EPA-22-30-4K	30	120
EM2B	EMERGENCY LIGHT. BLACK. HIGH LUMEN OUTPUT	BOLT	BELEDR-1B-HL	1.8	120
		BEST LIGHTING	LEDR- 1B-HL	1.8	120
		EMERGENSEE	SELEDR-1B-HL	1.8	120
EM2W	EMERGENCY LIGHT. WHITE. HIGH LUMEN OUTPUT	BOLT	BELEDR-1W-HL	1.8	120
		BEST LIGHTING	LEDR- 1W-HL	1.8	120
		EMERGENSEE	SELEDR-1W-HL	1.8	120
EX1B	EXIT/EMERGENCY LIGHT COMBO, HIGH LUMEN, BLACK, RED LETTERS. REMOTE CAPACITY. FRONT OF HOUSE ONLY.	BOLT	BELEDCXTEU2RBRCHL	3.7	120
		BEST LIGHTING	LEDCXTEU2RBRCHL	3.7	120
EX1W	EXIT/EMERGENCY LIGHT COMBO, HIGH LUMEN, WHITE, RED LETTERS. REMOTE CAPACITY	BOLT	BELEDCXTEU2RWRCHL	3.7	120
		BEST LIGHTING	LEDCXTEU2RWRCHL	3.7	120
		EMERGI-LITE	ELXN400-R-2LEDR	3.6	120
EX1RW	EXTERIOR EMERGENCY LIGHT. WHITE/GRAY. TWIN LAMP. WEATHER PROOF.	BOLT	BERHLED2-PWP-MVG	4	120
		BEST LIGHTING	RHLED2-PWP-MVG	4	120
					120
EX1RB	EXTERIOR EMERGENCY LIGHT. BLACK. TWIN LAMP. WEATHER PROOF.	BOLT	BERHLED2-PWP-MVB	4	120
		BEST LIGHTING	RHLED2-PWP-MVB	4	120
HL1	HOOD LAMP, LED. 3000K ENCLOSURE RATED, 1600 LUMENS	GREEN CREATIVE	15A21G4DIM/830	15	120
		MAXLITE	E15A19ND30/G3	15	120
P3	SUSPENDED SEMI-DIRECT, LED, 3500K, 8' LENGTH	PHILLIPS / SIGNIFY	770SCCAD-08-7-1-EW	33	120
P4L	LARGE (14") BRASS GLOBE LIGHT. INTEGRAL LED. 3500K	BOCK LIGHTING	P240-LG4W/141	10	120
		ARKANSAS LIGHTING	4241P-LED	15	120
P4S	SMALL (10") BRASS GLOBE LIGHT. INTEGRAL LED. 3500K	BOCK LIGHTING	P240-LG4W/101	10	120
		ARKANSAS LIGHTING	4241P-91LED	15	120
P5	UM BRIGHT GLOBE PENDANT. INTEGRAL LED. 3500K	ARKANSAS LIGHTING	4240P-LED	20	120
RD	4' NARROW STRIP	COOPER	4ST1L2040R (INTEGRAL LED)		120
		MERCURY LIGHTING	MB-12B-TS-ELB-UNV/MBR-12B/154-A		120
RDL	T5 LAMP FOR RDL. 3500K	PHILLIPS	467134 24TSLED/HO/4ft-3500		
T1	THEATRICAL HORIZONTAL LED HEAD. MONOPOINT MOUNT. BLACK. 3500K. SPOT LIGHTS OVER FIXED TABLES	CONTECH LIGHTING	CTLB061CM35MVD-B	10	120
T2	THEATRICAL VERTICAL LED TRACK HEAD, TRACK MOUNT, ART PACK LIGHTS, BLACK, 3500K, THEATRICAL SHADES. 18" EXTENSION ROD	CONTECH LIGHTING	CTLB061VS35D-B-RD16A 18" EXTENSION	10	120
T2T	TRACK SYSTEM 2', 4', 6' LENGTH	CONTECH LIGHTING	LT-2B, LT-4B, LT-6B		
TL2	LED TAPE LIGHTING SYSTEM. 3500K	CONTECH LIGHTING	TL2 INTERIOR PACKAGE. CONTACT WENDY'S LIGHTING SUPPLIER		120
UM2	SMALL PENDANT LIGHT	NORA	NRS8S-500-WBN	NA	120
		ICON / MICHA	CPW003-10W	NA	120
UM4	ROUND DRUM LIGHT	BESA	BES1052-039	NA	120
		CONTECH LIGHTING	RLM43IDRA2-NK	NA	120
		ICON / MICHA	CPI0925-10W	NA	120
UM2L / UM4L	LED - A19 / A21 LAMP. ENCLOSED RATED, 3000K	GREEN CREATIVE	11A19DIM/830	11	120
		MAXLITE	E11A19ND30 G3	11	120
WB1	WALK-IN COOLER/ FREEZER LIGHT. INTEGRAL LED, NSF RATED, 4000K, WHITE	MAXLITE	LSV4U0540	34.2	120
WB2	WALK-IN COOLER/ FREEZER LIGHT. INTEGRAL LED, NSF RATED, 4000K, WHITE, WITH BATTERY BACKUP	MAXLITE	LSV4U0540EM	34.2	120
OS1	OCCUPANCY / MOTION SENSOR	LEVITON	OSD-10-ID-W		
OS2	WALK-IN COOLER / FREEZER MOTION SENSOR	KASON	19KOA-S		
BUILDING LIGHTING - EXTERIOR					
WP1	EXTERIOR LIGHT, INTEGRAL LED 5000K.	RAB	WPLED26N	26	120
		ABB	WL-26501	26	120
WP4	EXTERIOR SECURITY LIGHT, INTEGRAL LED WITH PHOTOCELL	RAB	WPLED26N/PC	26	120
		ABB	WL-26503PC	26	120
K10	EXTERIOR BUILDING DECORATIVE LED LIGHT BRONZE, 3500K	INDESSA	574-3LED19-BRZ-35K	19	120
K11	EXTERIOR BUILDING DECORATIVE LED LIGHT SILVER, 3500K	INDESSA	574-3LED19-SAL-35K	19	120
K12	EXTERIOR BUILDING DECORATIVE LED LIGHT SILVER, 3500K	INDESSA	531-3LED19-SAL-35K	19	120
A3	LED - DOWNLIGHT - EXTERIOR . 3000K. DIRECT CONNECT. DARK BRONZE	NICOR	DLR56-3012-120-3K-OB	19	120
A6	LED - DOWNLIGHT - EXTERIOR . 3000K. DIRECT CONNECT. NICKEL	NICOR	DLR56-3012-120-3K-NK	19	120
TL1	EXTERIOR LED TAPE LIGHTING SYSTEM. 3500K	CONTECH LIGHTING	TLT24V35K PACKAGE. CONTACT WENDY'S LIGHTING SUPPLIER		
S1	POLE MOUNTED LED ON 25-FOOT POLE WITH HOUSE SHIELD	LITHONIA	DSX1 P2 40K T4M 208 SPA HS DDBXD	70	208

LIGHTING LEGEND

- LED LIGHTING FIXTURE
- LED LIGHTING FIXTURE ON NIGHT LIGHT CIRCUIT
- LARGE DECORATIVE PENDANT
- SMALL DECORATIVE PENDANT
- RECESSED DOWNLIGHT
- AIMABLE RECESSED DOWNLIGHT
- BUILDING LIGHT FIXTURE
- LED TAPE LIGHT
- UP LIGHTING
- SITE LIGHTING
- A-2 CIRCUIT NUMBER
- B1 FIXTURE SYMBOL
- $ SINGLE POLE WALL SWITCH AT 4'-6" A.F.F
- EMERGENCY FLOOD LIGHT (WALL MOUNTED ON CEILING SURFACE MOUNTED)
- EXIT/EMERGENCY FLOOD LIGHT (WALL MOUNTED OR CEILING SURFACE MOUNTED)
- OCCUPANCY SENSOR (WALL MOUNTED)
- DIMMER SWITCH, (LEVITON #IP710-DLZ-WH)

GENERAL NOTES

1. IN AREAS WITHOUT CEILINGS OR ANYWHERE EXPOSED TO VIEW, INSTALL ALL CONDUCTORS, FEEDERS, OR LOW-VOLTAGE CABLING IN RIGID GALVANIZED STEEL (RGSC) OR THIN WALL EMT. BX, AC OR MC CABLE ARE NOT PERMITTED. INSTALL ALL CONDUITS TIGHT TO DECK EITHER PARALLEL OR PERPENDICULAR TO BUILDING LINES, ONLY DROP CONDUITS AT POINT OF CONNECTION. INSTALL ALL ELECTRICAL RACEWAYS IN AN ORDERLY FASHION AND REMOVE ALL VISIBLE MARKING. WRITE CIRCUIT NUMBER ON THE INSIDE OF ALL JUNCTION BOX COVERS.
2. CONNECT EXIT/EMERGENCY/NIGHT FIXTURES TO UNSWITCHED HOT CONDUCTOR AHEAD OF ANY LIGHTING CONTROLS.
3. REFER TO ARCHITECTURAL REFLECTED CEILING PLAN AND DETAILS FOR THE LOCATION OF ALL LIGHTING FIXTURES AND ALL OTHER CEILING MOUNTED EQUIPMENT. VERIFY MOUNTING HEIGHTS AND FINISHES WITH ARCHITECT PRIOR TO ROUGH-IN.
4. REFER TO THE POWER PLANS FOR LOCATION OF ELECTRICAL EQUIPMENT.
5. PROVIDE INDICATED CONDUCTOR SIZE FOR ENTIRE CIRCUIT WHERE CONDUCTOR SIZES ARE SHOWN ON HOMERUNS.
6. PROVIDE A DEDICATED NEUTRAL WITH ALL DIMMING SYSTEM CIRCUITS. NO COMMON NEUTRALS SHALL BE ALLOWED.
7. PROVIDE (2) ADDITIONAL #12 CONDUCTORS FOR ALL 0-10V DIMMING CIRCUITS.

(#) CODED NOTES:

1. JUNCTION BOX ABOVE CEILING FOR HOOD LIGHTS.
2. PROVIDE TWO (2) JUNCTION BOXES FOR SIGN, COORDINATE EXACT LOCATION AND ELEVATIONS WITH SIGN CONTRACTOR PRIOR TO ROUGH IN.
3. LED TAPE LIGHTING DRIVER MUST BE INSTALLED INSIDE OF BUILDING DUE TO TEMPERATURE RATING OF DRIVER. REFER TO LED DRIVER MOUNTING DETAIL, THIS SHEET.
4. EXTERIOR LED TAPE LIGHTING 'TL'. REFER TO ARCHITECTURAL SHEETS FOR MORE INFORMATION. VERIFY LENGTHS AND DRIVER REQUIREMENTS PRIOR TO INSTALLATION. REFER TO WALL PENETRATION DETAIL, THIS SHEET.
5. FIXTURE PROVIDED WITH HOOD. PROVIDE HEAT RATED 3000K LED. SUBSTITUTION OF CFL OR INCANDESCENT LAMP IS PROHIBITED.

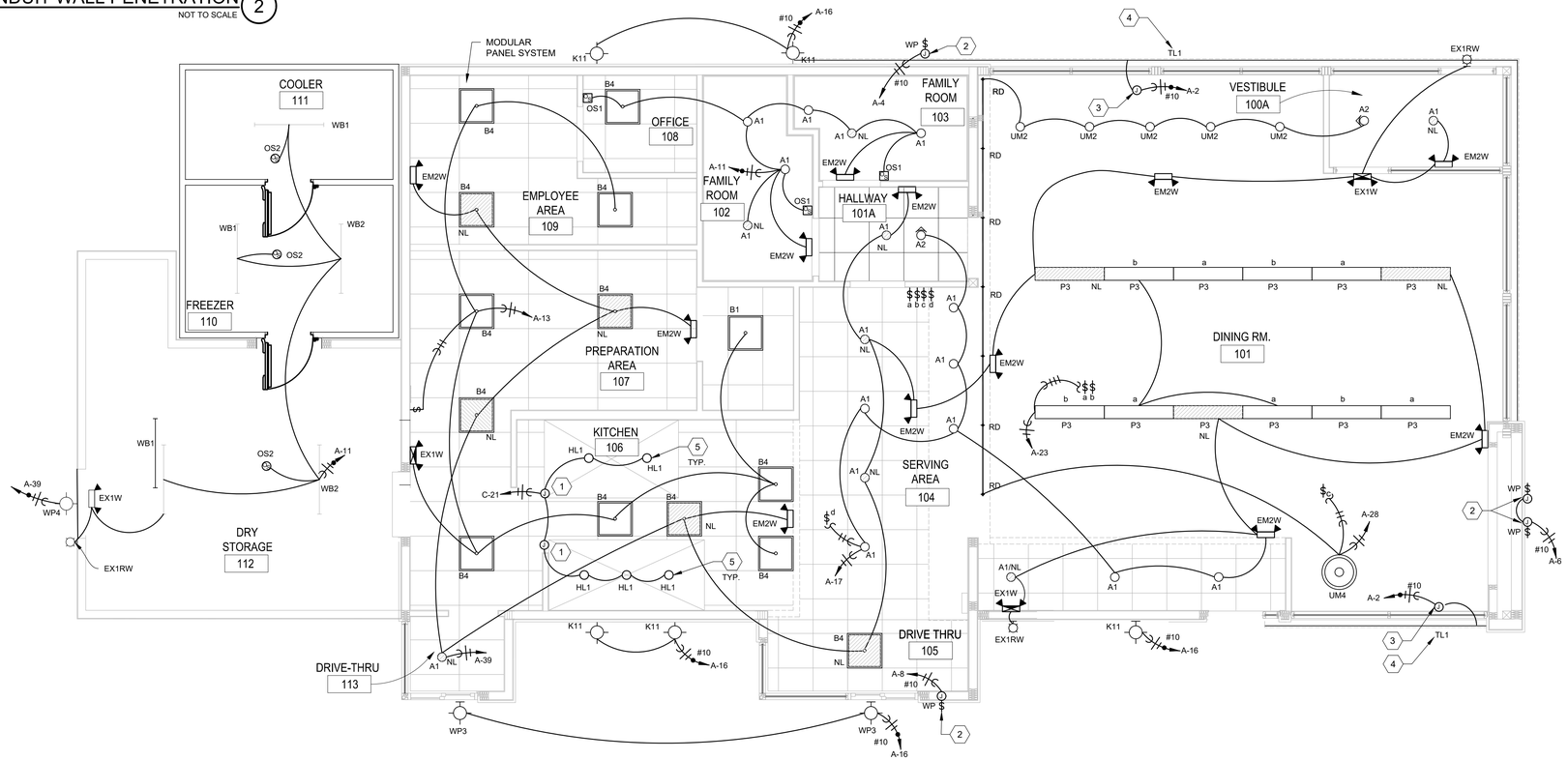

LIGHTING PLAN (1)

1/4" = 1'-0"

SITE NUMBER:	00000
BASE MDL:	SMART 55 - SQUARE 2019
ASSET TYPE:	COMP./FRAN
CLASSIFICATION:	NEW
OWNER:	OWNER NAME
BASE VERSION:	2019
UPGRADE CLASSIFICATION:	NEW BUILD
PROJECT YEAR:	2019
FURNITURE PACKAGE:	2016 V3
DRAWING RELEASE	JANUARY 2020

WEILER ENGINEERING
P.O. BOX 832
VERADALE, WA 99037
PH. (509) 998-3068

PROJECT TYPE: NEW
SMART 55 - SQUARE

HIGHWAY 95
PONDERAY, ID 83852

REV.	DATE	DESCRIPTION
1	01-20-2020	JANUARY SPRINT 2020

ISSUE DATE: 08/14/2020
PROJECT NUMBER: --
DRAWN BY: dw
CHECKED BY: dw

SEAL

SHEET NAME
LIGHTING PLAN

SHEET NUMBER
E1.1

8/14/2020, 12:45 PM, E:\Lexar\Projects\Wendys\ELECTRICAL\SMART 55 SQUARE (1.0) - MEP - DWG - JAN 2020\90_SMART-1.0-55-SQUARE_E1_1_Lighting Plan.dwg, Owner

RECEPTACLE AND COVER PLATE LEGEND

AREA	RECEPTACLE COVER	RECEPTACLE	USB PORTS	SPECIAL NOTES
KITCHEN & GENERAL AREA	STAINLESS STEEL	WHITE	NO	GFI AS NOTED
DEDICATED IT CIRCUITS	STAINLESS STEEL	ORANGE (IG)	NO	CIRCUIT MARKED AS SPG OR IG
DINING ROOM	BLACK	BLACK	YES	TAMPER RESISITANT
DINING ROOM-CUSTOMER VIEW	WHITE	WHITE	YES	TAMPER RESISITANT

ELECTRICAL LEGEND

- (J) JUNCTION BOX
- (*) * = A-H AS COOKLINE JUNCTION BOXES REFER TO DETAIL #3 ON SHEET E4.2
- 20 AMP 120V-1PH SIMPLEX RECEPTACLE +16" AFF OR AS NOTED
- 20 AMP 120V-1PH DUPLEX RECEPTACLE +16" AFF OR AS NOTED
- GFI 20 AMP 120V-1PH GROUND FAULT INTERRUPTING RECEPTACLE
- WP 20 AMP 120V-1PH WEATHERPROOF RECEPTACLE
- R 20 AMP 120V-1PH RECESSED RECEPTACLE
- 120V-1PH QUADRUPLEX RECEPTACLE
- 20 AMP 120V-1PH HUBBELL #USB20X2BK RECEPTACLE
- 20 AMP QUADRUPLEX 120V-1PH HUBBELL # USB20X2W (QTY 2)
- 20 AMP 120V-1PH HUBBELL #IG5362 ISOLATED GROUND RECEPTACLE
- 20 AMP QUAD HUBBELL #IG5362 (QTY 2) ISOLATED GROUND RECEPTACLE
- SPECIAL RECEPTACLE, SEE KITCHEN EQUIPMENT SCHEDULE
- DISCONNECT SWITCH BY ELECTRICAL CONTRACTOR
- DISCONNECT SWITCH SUPPLIED WITH EQUIPMENT
- (RT) REMOTE PIEZO ALERT FROM RTU-1 & RTU-2 SMOKE DETECTORS (96" A.F.F.)
- (W) EMERGENCY POWER KILL SWITCH (48" AFF) 120 VOLT MOMENTARY CONTACT NORMALLY OPEN EMERGENCY OFF SWITCH, EATON 10250T WITH SHROUD. REFER SHUNT TRIP CIRCUIT DETAIL, SHEET E3.1
- (F) REMOTE FIRE SUPPRESSION PULL STATION (48")
- (VC) VOLUME CONTROL
- ELECTRIC MOTOR
- TELEPHONE CONNECTION
- TELEPHONE/DATA CONNECTION
- DATA CONNECTION
- (RT) REMOTE TEST STATION (54")
- PARTIAL CIRCUIT
- 3#1, 1#8G IN 1-1/4" C HOME RUN TO PANEL. CIRCUIT NUMBERS, PHASE, NEUTRAL & GROUND CONDUCTORS INDICATED ALONG WITH ISOLATED GROUND CONDUCTOR IF APPLICABLE.
- (T)(S)(TS) THERMOSTAT, TEMPERATURE SENSOR AND HUMIDISTAT BY MECHANICAL CONTRACTOR

GENERAL NOTES

1. IN AREAS WITHOUT CEILINGS OR WHERE ANY CONDUITS, CONDUCTORS, FEEDERS. OR LOW-VOLTAGE CABLING IS VISIBLE, ALL WRITING SHALL BE IN RIGID GALVANIZED STEEL (RGSC) OR THIN WALL EMT CONDUIT. BX, AC, AND MC CABLE ARE NOT PERMITTED. CONDUITS ARE TO BE RUN TIGHT TO DECK EITHER PARALLEL OR PERPENDICULAR TO BUILDING LINES AND ONLY DROP AT POINT OF CONNECTION. WHERE EXPOSED TO VIEW, ALL MATERIALS (CONDUITS. JUNCTION BOXES, ETC.) SHALL BE INSTALLED IN AN ORDERLY FASHION AND SHALL BE CLEAN AND FREE FROM ALL VISIBLE MARKING. JUNCTION BOXES SHALL HAVE CIRCUIT NUMBERS WRITTEN ON THE INSIDE OF THE JUNCTION BOX COVER.
2. ELECTRICAL CONTRACTOR TO COORDINATE WORK WITH MECHANICAL, REFRIGERATION AND EQUIPMENT CONTRACTORS, INCLUDING COOLER/FREEZER WORK AND ICE MACHINE CONDENSING UNIT.
3. ELECTRICAL CONTRACTOR TO VERIFY ALL ROUGH-IN DIMENSIONS AND POWER REQUIREMENTS WITH KITCHEN EQUIPMENT DISTRIBUTOR PRIOR TO ROUGH-IN.
4. ELECTRICAL CONTRACTOR TO HOOK UP FIELD CONNECTIONS WITHIN FRONT COUNTER, COOKCENTER PANEL CIRCUITS. REMOTE REFRIGERATION (ON ROOF) AND ICE MACHINE REMOTE UNIT (ON ROOF) AT TIME OF INSTALLATION.
5. GENERAL CONTRACTOR IS TO VERIFY SIZE OF FAULT CURRENT COMING OFF PRIMARY SERVICE AND IS TO INSURE ITS COMPATIBILITY w/WENDY'S DISTRIBUTION PANEL.
6. GENERAL CONTRACTOR IS TO INSURE ADEQUATE CONDUIT SIZE FOR ELECTRICAL AND PHONE WIRING ON SITE AND INTO BUILDING.
7. HEIGHTS INDICATED FOR RECEPTACLES AND JUNCTION BOXES ARE MEASURED FROM FINISH FLOOR TO THE CENTER OF THE BOX.
8. ELECTRICAL CONTRACTOR IS RESPONSIBLE FOR INSTALLING ALL TELEPHONE LINES AND TERMINATIONS. VERIFY QUANTITY AND LOCATIONS WITH OWNER PRIOR TO BIDDING.
9. ALL CIRCUITS MAY BE CORRECTED TO THE LEAST AMOUNT OF CONDUIT RUN UNLESS NOTED OTHERWISE.
10. ALL COVER PLATES TO BE SATIN FINISH STAINLESS STEEL IN BACK OF HOUSE AREA. DINING AREA COVER PLATES SHALL BE WHITE UNLESS OTHERWISE NOTED.
11. ALL 120V RECEPTACLES IN KITCHEN AND RESTROOMS TO HAVE GROUND-FAULT CIRCUIT INTERRUPTER PROTECTION PROVIDED IN ELECTRICAL PANELS.
12. COOKCENTER IS ASSEMBLED AND PREWIRED AT THE FACTORY. A LENGTH OF CONDUIT W/WIRES IS PROVIDED FOR THE REMOTE CONDENSING ROOFTOP UNIT.
13. POWER DISCONNECT, UNPOWERED SERVICE OUTLET AND SMOKE DETECTOR ARE PART OF ROOFTOP UNIT IF SUPPLIED BY AN APPROVED HVAC SUPPLIER. ELECTRICIAN MUST PROVIDE WITH ALL OTHER MODELS (TYPICAL AT ALL RTU'S UNITS).
14. THERMOSTATS, TEMPERATURE SENSORS, CARBON DIOXIDE SENSORS AND HUMIDISTATS: UNLESS NOTED OTHERWISE, PROVIDE WALL BOX WITH 1/2" CONDUIT STUBBED OUT TO ABOVE ACCESSIBLE CEILING WITH NYLON BUSHINGS AND PULLSTRING.
15. MECHANICAL CONTRACTOR TO FURNISH REMOTE TEST STATION/ALARM. ELECTRICAL CONTRACTOR TO WIRE ROOF TOP UNIT CONTROL CIRCUIT THRU AUXILIARY CONTACTS IN SMOKE DETECTOR AND MAKE ALL FINAL CONNECTIONS. (TYPICAL OF ALL ROOF TOP UNITS)
16. REFER TO SHEET E5.1 ELECTRICAL ELEVATIONS FOR RECEPTACLE AND COVER PLATE LEGEND TO ENSURE PROPER RECEPTACLE TYPE, COLOR, AND COVER PLATE.
17. ALL ROOF PENETRATIONS NEED TO BE SEALED ACCORDING TO ROOFING MANUFACTURER'S INSTRUCTIONS.
18. COORDINATE WORK ABOVE THE CEILING WITH OTHER TRADES TO PROVIDE THE GREATEST POSSIBLE CLEARANCE.CONDUITS SHALL BE ROUTED IN THE DIRECTION OF THE TRUSSES.
19. ONLY EMT CONDUITS ARE ALLOWED IN RECEIVING/DRY STORAGE.
20. PROVIDE WALL BOX WITH 1/2" CONDUIT STUBBED OUT TO ABOVE ACCESSIBLE CEILING WITH NYLON BUSHINGS AND PULLSTRING FOR ALL LOW VOLTAGE DEVICES.
21. REFER TO SHEET E2.2 FOR DATA AND POS SYSTEM REQUIREMENTS.

(#) CODED NOTES:

1. ROUTE RECEPTACLE CIRCUIT WIRING THROUGH CHASE G1405. REFER TO DRIVE THRU SERVICE AREA ELEVATION, SHEET E5.1 FOR ADDITIONAL INFORMATION.
2. JUNCTION BOX ABOVE CEILING FOR FOR USED COOKING OIL TANK ALARM. PROVIDE 1" CONDUIT WITH PULL STRING FOR SUPPLIER FOR INSTALLATION OF ALARM.
3. 120 VOLT N.O. MOMENTARY CONTACT MICROSWITCH MOUNTED IN HOOD EXTINGUISHING SYSTEM SUCH THAT OPERATION OF EXTINGUISHING SYSTEM SHALL CAUSE MICROSWITCH TO CLOSE (TYPICAL OF 2) REFER TO SHEET M1.1. REFER TO DETAIL 2, SHEET E3.1.
4. VOLUME CONTROL AT 48" A.F.F. PROVIDE 3/4" CONDUIT TO JUNCTION BOX AT MUSIC SYSTEM.
5. 2'x4'x3/4" FIRE RESISTANT PLYWOOD BACKBOARD FOR INCOMING TELEPHONE SERVICE.
6. PROVIDE FINAL CONNECTIONS TO JUNCTION BOXES AND HOME RUN TO INDICATED CIRCUITS. CIRCUITS ARE PRE-WIRED IN UL LISTED RACEWAY AND TERMINATED JUNCTION BOXES IN CHASE ABOVE CEILING. REFER TO GRILL LINE ELEVATION, SHEET E5.1 AND KITCHEN EQUIPMENT CONNECTION SCHEDULE, SHEET E.3.2.
7. CONNECT WITH 2#8 & 1#10G IN 1" CONDUIT. COORDINATE WORK WITH PLUMBING AND KITCHEN EQUIPMENT SUPPLIER.
8. MOUNT RECEPTACLE HORIZONTAL AT 40" A.F.F TO ENSURE CLEARANCE WITH COUNTER TOP AND BACK SPLASH.. 1
9. (2) 1" POWER & (2) 1" DATA CONDUITS WITH PULL STRING IN SLAB FOR BOOTH WALL/ CUSTOMER SELF ORDER KIOSK. CONFIRM EXACT PLACEMENT OF FURNITURE & LOCATE CONDUITS ACCORDINGLY. REFER TO ARCHITECTURAL PLANS.
10. RECESSED RECEPTACLE FOR FLY LIGHT. COORDINATE WITH ARCHITECT FOR FINAL LOCATION PRIOR TO ROUGH IN AND CONNECT TO TIME CLOCK RECEPTACLE.
11. JUNCTION BOX FOR WiFi TABLE RECEPTACLES (PRE-WIRED). PROVIDE 20' OF ADDITIONAL SLACK FOR POWER RUN. VERIFY WITH MILLWORK MANUFACTURER EXACT LOCATION AND REQUIREMENTS.
12. ELECTRICAL CONTRACTOR TO DISCONNECT HEATING ELEMENT IN ELECTRIC FIREPLACES.
13. PROVIDE RECEPTACLE FOR FREESTYLE MACHINE IN KITCHEN EQUIPMENT SUPPLIED CHASE G1402. WIRE THROUGH JUNCTION BOXES SUPPLIED IN CHASE. COORDINATE MOUNTING LOCATION WITH KITCHEN EQUIPMENT SUPPLIER.
14. CIRCUITS SHOWN ARE PRE-WIRED IN UL LISTED RACEWAY WHICH IS PART OF KITCHEN EQUIPMENT AND TERMINATE IN CHASE #2 UP AT CEILING. ELECTRICAL CONTRACTOR MUST MAKE FIELD CONNECTIONS IN JUNCTION BOXES AND PROVIDE HOME RUNS FROM JUNCTION BOXES TO INDICATED CIRCUIT. WIRE 20A CIRCUIT WITH #12 WIRE AND 30A CIRCUIT WITH #10 WIRE.
15. INSTALL VENDOR SUPPLIED ICE MAKER DISCONNECT HARNESS INSIDE CONDIMENT BAR. INSTALL WIRING IN VENDOR SUPPLIED CONDUITS BETWEEN THE REMOTE ICE MAKER AND REMOTE CONDENSER. REFER TO DETAIL #3 ON E2.3.
16. INSTALL VENDOR SUPPLIED ICE MAKER DISCONNECT HARNESS ON WALL. INSTALL WIRING IN VENDOR SUPPLIED CONDUITS BETWEEN THE REMOTE ICE MAKER AND REMOTE CONDENSER. REFER TO DETAIL #4 E2.3.
17. PROVIDE REQUIRED CONNECTION TO EVAPORATOR POWERED BY ROOF MOUNTED CONDENSING UNIT.
18. PROVIDE OUTLET FOR RE-CIRCULATION PUMP. COORDINATE EXACT LOCATION AND REQUIREMENT WITH PLUMBING CONTRACTOR. PUMP TO BE ON KITCHEN LIGHT CONTROL ZONE.
19. PROVIDE RECEPTACLE IN PRE-CUT KITCHEN EQUIPMENT SUPPLIED CHASE G1405. ROUTE WIRING THROUGH CHASE. REFER TO DRIVE THRU SERVICE AREA ELEVATION, SHEET E5.1 FOR ADDITION INFORMATION.
20. PROVIDE WIRING FROM TELEPHONE BOX TO DERMACATION POINT.
21. PROVIDE RECEPTACLE AT 18" AFF FOR CARBON DIOXIDE METER. PROVIDE CAT 5 CABLE BACK TO MANAGERS OFFICE FOR REMOTE DISPLAY UNIT. COORDINATE FINAL LOCATIONS WITH ARCHITECT. COORDINATE ALL REQUIREMENTS WITH VENDOR.
22. PROVIDE HEAT TRACE AND REQUIRED RECEPTACLE FOR CONDENSATION LINE, COORDINATE WITH PLUMBING CONTRACTOR THE EXACT LOCATION PRIOR TO ROUGH-IN.

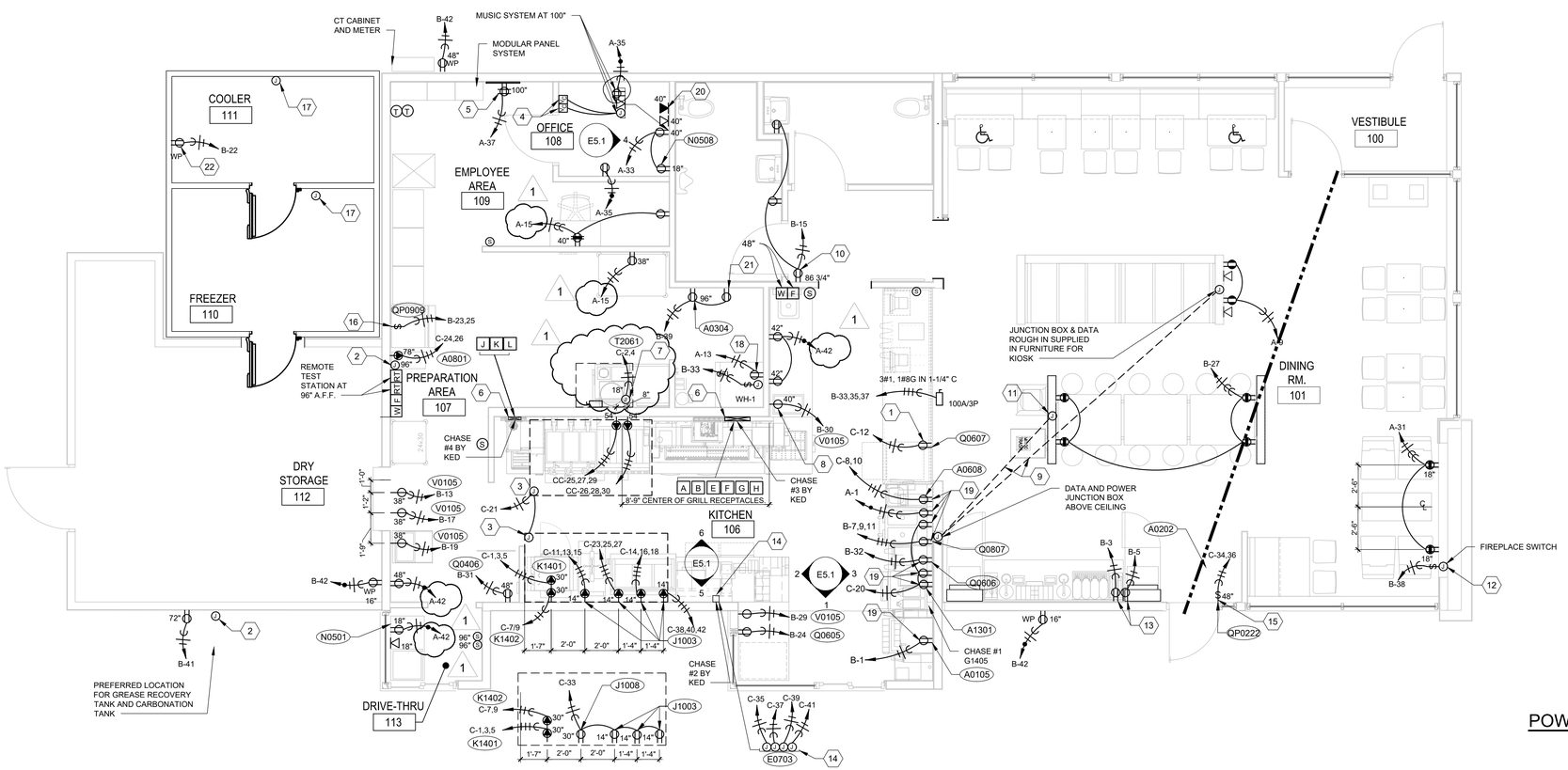

POWER PLAN (1)
1/4" = 1'-0"

SITE NUMBER:	00000
BASE MDL:	SMART 55 - SQUARE 2019
ASSET TYPE:	COMP./FRAN
CLASSIFICATION:	NEW
OWNER:	OWNER NAME
BASE VERSION:	2019
UPGRADE CLASSIFICATION:	NEW BUILD
PROJECT YEAR:	2019
FURNITURE PACKAGE:	2016 V3
DRAWING RELEASE	JANUARY 2020

WEILER ENGINEERING
P.O. BOX 832
VERADALE, WA 99037
PH. (509) 998-3068

PROJECT TYPE: NEW
SMART 55 - SQUARE

Wendy's
HIGHWAY 95
PONDERAY, ID 83852

REV.	DATE	DESCRIPTION
	01-20-2020	JANUARY SPRINT 2020
1	01-14-2020	ALTERED CKTS

ISSUE DATE: 08/14/2020
PROJECT NUMBER: --
DRAWN BY: dw
CHECKED BY: dw

SEAL
DAVID J. WEILER
STATE OF WASHINGTON
33385
REGISTERED PROFESSIONAL ENGINEER
8-14-20

SHEET NAME
POWER PLAN

SHEET NUMBER
E2.1

8/14/2020, 12:49 PM, E:\Lexar\Projects\Wendys\ELECTRICAL\SMART 55 SQUARE (1.0) - MEP - DWG - JAN 2020\90_SMART-1.0-55-SQUARE_E2_1_Power Plan.dwg, Owner

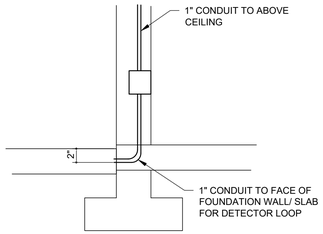

DETECTOR LOOP DETAIL (2)
NOT TO SCALE

DRIVE THRU/MENU BOARD CIRCUITS

CIRCUIT	DESCRIPTION	CONTROL ZONE
A-18	ORDER CANOPY LIGHTING	CONTROL ZONE 3
A-20	CANOPY HEAT TAPE SUPPLIED BY CANOPY VENDOR	THERMOSTAT CONTROLED
A-22	EXTERIOR MENU BOARD	CONTROL ZONE 2
A-24	PRE-SELL MENU BOARD	CONTROL ZONE 2
A-34	DIGITAL ORDER CONFIRMATION DISPLAY (OUTDOOR LCD PEDESTAL)	SPG/IG, ISOLATED GROUND. NOT PART OF CONTROL ZONE.

(#) CODED NOTES:

1. (1) 1" CONDUIT FOR DATA & (1) 1" CONDUIT FOR AUDIO AND TIMER SIGNAL UNDERGROUND TO ORDER CONFIRMATION DISPLAY.
2. POS RECEPTACLE PROVIDED AS PART OF CHASE. CONNECT TO CIRCUIT SHOWN.
3. J-BOX ABOVE CEILING IN THIS AREA FOR STATIC MENU BOARD. CONNECTION TO LED SPINNER MENU TRANSFORMER. MAKE CONNECTIONS FROM TRANSFORMER TO (7) MENU PANELS. NO OTHER ELECTRICAL OR DATA DEVICES ARE NEEDED FOR MENU BOARDS.
4. JUNCTION BOX IS SUPPLIED IN POS COUNTER. ELECTRICAL CONTRACTOR TO SUPPLY OUTLET AND MUST MAKE FIELD CONNECTIONS IN JUNCTION BOX AND PROVIDE HOME RUN.
5. ENSURE CONDUIT STUBS ARE WITHIN THE 5"X5" OPEN AREA IN THE BOTTOM OF EACH CANOPY SUPPORT.
6. 1" CONDUIT WITH 1-120V CIRCUIT TO PRE-SELL BOARD.
7. 1-1/4" CONDUIT FOR SIX (6) CIRCUITS FROM PANELBOARD TO MENUBOARD .
8. 1" CONDUIT WITH PULL STRING THROUGH CURB TO 2" BELOW PAVEMENT LINE FOR DETECTOR LOOP.
9. FRONT COUNTER PRE-WIRED REGISTER RECEPTACLES. RUN CIRCUIT WIRING THROUGH CHASE G1405. INSTALL PULL STRING FOR POS DATA BOXES.
10. 1" CONDUIT WITH 3-120V CIRCUIT TO CANOPY.

GENERAL NOTES

1. THE CONDUIT AND OUTLET LOCATIONS SHOWN ON THIS SHEET ARE FOR THE IBM POINT OF SALE REGISTER SYSTEM ONLY. ALTERNATE P.O.S. SUPPLIERS MUST CONFORM TO THIS LAYOUT OR PROVIDE THE OWNER AND/OR GENERAL CONTRACTOR WITH WIRING DIAGRAMS AND INSTALLATION DETAILS BEFORE THE ELECTRICAL CONTRACTOR STARTS ANY WORK.
2. THE CONDUITS, JUNCTION BOXES AND OUTLETS SHOWN ARE INSTALLED BY ELECTRICAL CONTRACTOR AND ARE IN ADDITION TO THOSE INDICATED ON SHEET E2.1. ALL ITEMS SHOWN ARE TO CLARIFY AND EMPHASIZE THE IMPORTANCE OF PROPER PLACEMENT.
3. ALL CONDUITS SHOULD BE STEEL STUBBED OUT ABOVE THE CEILING LINE AND TERMINATED INTO A J-BOX AS NOTED AND CAPABLE OF ACCEPTING A FACEPLATE COVER. SEE DETAIL THIS SHEET.
4. ALL J-BOXES SHOULD BE INSTALLED IN SUCH A WAY THAT THEY ARE NOT BLOCKED BY OTHER EQUIPMENT OR STRUCTURAL COMPONENTS.
5. ALL CABLE ACCESS OPENINGS THRU S/S MUST HAVE RUBBER OR PLASTIC GROMMETS INSTALLED.
6. THE ELECTRIC SERVICE FOR THE GFI RECEPTACLE/SCOREBOARD MUST BE ON A SEPARATE BREAKER (NOT CONNECTED TO THE MENU BOARD OR OUTSIDE LIGHT FEED).
7. HEIGHTS INDICATED FOR RECEPTACLES AND J-BOXES ARE MEASURED FROM FINISH FLOOR TO THE CENTER OF BOX.
8. IN AREAS WITHOUT CEILINGS OR WHERE ANY CONDUITS, CONDUCTORS, FEEDERS, OR LOW-VOLTAGE CABLING IN VISIBLE, ALL WIRING SHALL BE IN RIGID GALVANIZED STEEL (RGSC) OR THIN WALL EMT CONDUIT. BX, AC, AND MC CABLE ARE NOT PERMITTED. CONDUITS ARE TO BE RUN TIGHT TO DECK EITHER PARALLEL OR PERPENDICULAR TO BUILDING LINES AND ONLY DROP AT POINT OF CONNECTION. WHERE EXPOSED TO VIEW, ALL MATERIALS (CONDUITS, JUNCTION BOXES, ECT.) SHALL BE INSTALLED IN AN ORDERLY FASHION AND SHALL BE CLEAN AND FREE FROM ALL VISIBLE MARKING. JUNCTION BOXES SHALL HAVE CIRCUIT NUMBERS WRITTEN ON THE INSIDE OF THE JUNCTION BOX COVER.

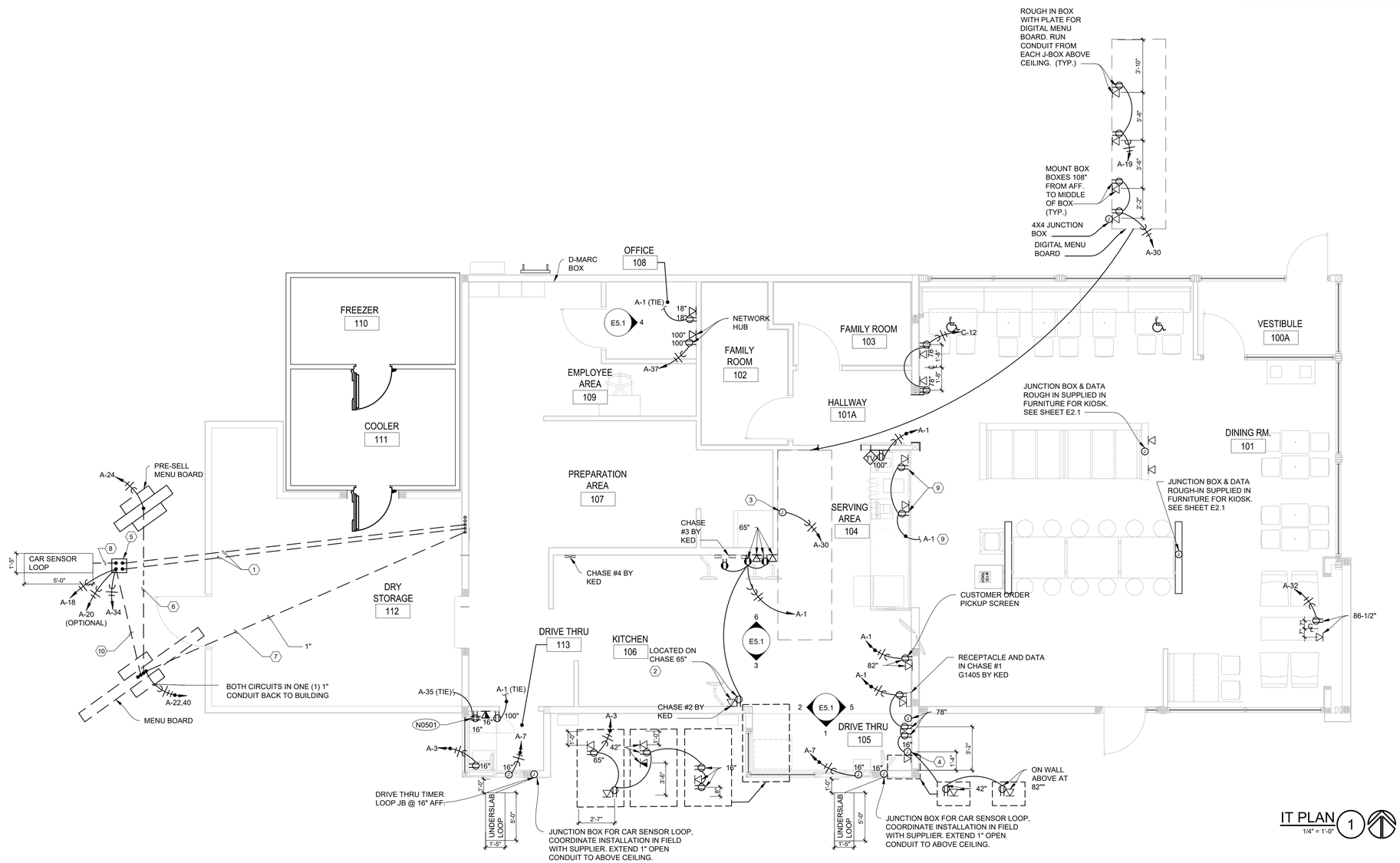

IT PLAN (1)
1/4" = 1'-0"

SITE NUMBER:	00000
BASE MDL:	SMART 55 - SQUARE 2019
ASSET TYPE:	COMP./FRAN
CLASSIFICATION:	NEW
OWNER:	OWNER NAME
BASE VERSION:	2019
UPGRADE CLASSIFICATION:	NEW BUILD
PROJECT YEAR:	2019
FURNITURE PACKAGE:	2016 V3
DRAWING RELEASE	JANUARY 2020

WEILER ENGINEERING
P.O. BOX 832
VERADALE, WA 99037
PH. (509) 998-3068

PROJECT TYPE: NEW
SMART 55 - SQUARE

Wendy's
HIGHWAY 95
PONDERAY, ID 83852

REV.	DATE	DESCRIPTION
1	01-20-2020	JANUARY SPRINT 2020

ISSUE DATE: 08/14/2020
PROJECT NUMBER: --
DRAWN BY: dw
CHECKED BY: dw

SEAL
DAVID J. WEILER
STATE OF WASHINGTON
33385
REGISTERED PROFESSIONAL ENGINEER
8/14/20

SHEET NAME
POWER AND IT PLAN

SHEET NUMBER
E2.2

8/14/2020, 12:50 PM, E:\Lexar\Projects\Wendys\ELECTRICAL\SMART 55 SQUARE (1.0) - MEP - DWG - JAN 2020\90_SMART-1.0-55-SQUARE_E2_2_Power and IT Plan.dwg, Owner

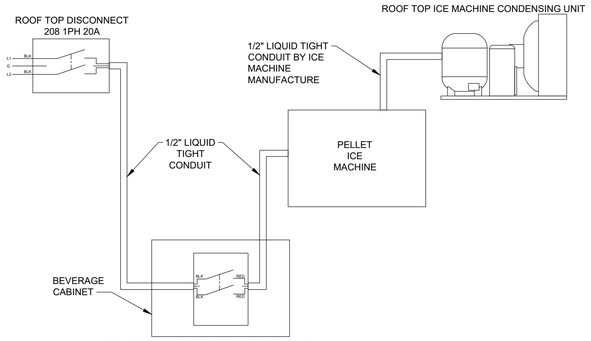

ICE MACHINE WIRING DIAGRAM (4)
NOT TO SCALE

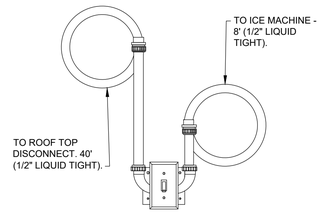

ICE MACHINE SWITCH DISCONNECT (3)
NOT TO SCALE

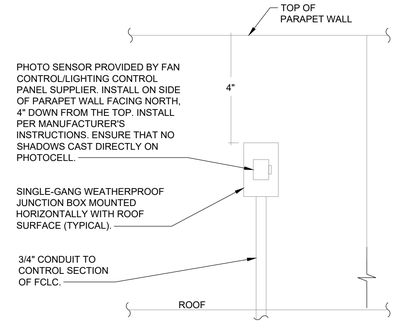

PHOTOCELL CONTROL MOUNTING DETAIL (2)
NOT TO SCALE

DISCONNECT NOTES

A. ALL DISCONNECTS ARE TO BE NEMA-3R RATED AND MOUNTED ON EQUIPMENT IF NOT PROVIDED WITH EQUIPMENT.

B. ELECTRICAL CONTRACTOR TO FURNISH AND INSTALL IF EQUIPMENT MANUFACTURER DOES NOT PROVIDE DISCONNECT WITH EQUIPMENT. VERIFY DISCONNECT REQUIREMENTS WITH MANUFACTURER.

C. ALL DISCONNECTS ARE SHOWN FOR REFERENCE ONLY. ACTUAL LOCATION OF DISCONNECTS SHALL BE COORDINATED AND VERIFIED WITH EQUIPMENT MANUFACTURER AND FINAL ORIENTATION OF EQUIPMENT ONCE PLACED ON ROOF.

CODED NOTES:

1. PROVIDE CONNECTION TO ASSOCIATED HOOD ON SWITCH. COORDINATE ALL REQUIREMENTS WITH MECHANICAL DRAWING AND HOOD WIRING DIAGRAM PRIOR TO ROUGH-IN.
2. PROVIDE 30A 208V 3P DISCONNECT SWITCH FUSED AT 15A IN NEMA 3R ENCLOSURE. PROVIDE (2)#10 AND (1)#10 GROUND IN 3/4" CONDUIT FROM EQUIPMENT TO REMOTE UNIT. VERIFY ALL OTHER REQUIRED WIRING. COORDINATE EXACT REQUIREMENTS WITH MANUFACTURER AND MAKE ALL FINAL CONNECTIONS REQUIRED FOR PROPER OPERATION.
3. PROVIDE 30A 208V 2P DISCONNECT SWITCH IN NEMA 3R ENCLOSURE FOR ICE MACHINE CONDENSING UNITS. MAKE ALL CONNECTIONS TO ASSOCIATED UNIT PER MANUFACTURER'S INSTRUCTIONS.
4. WEATHERPROOF RECEPTACLE PROVIDED WITH ROOF TOP UNIT. PROVIDE POWER AS INDICATED.

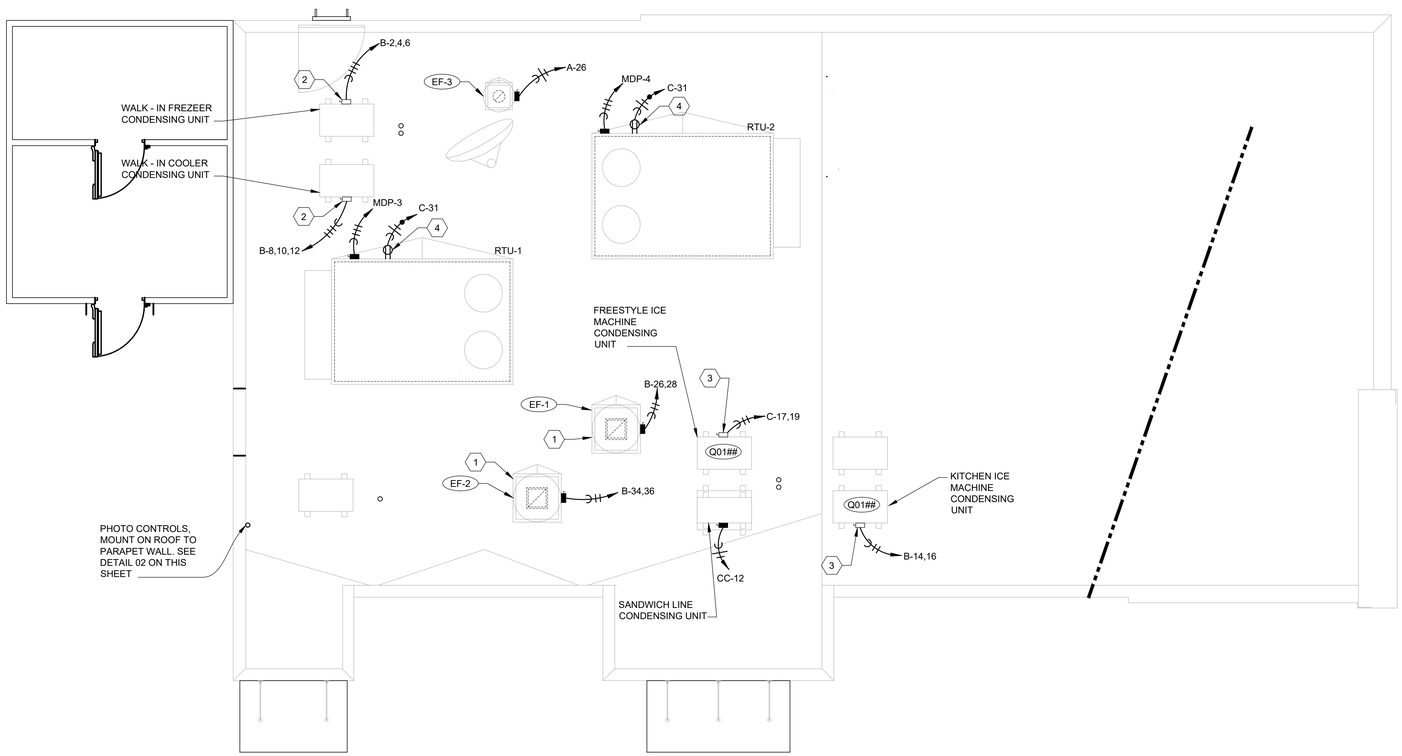

ROOF POWER PLAN (1)
1/4" = 1'-0"

SITE NUMBER:	00000
BASE MDL:	SMART 55 - SQUARE 2019
ASSET TYPE:	COMP./FRAN
CLASSIFICATION:	NEW
OWNER:	OWNER NAME
BASE VERSION:	2019
UPGRADE CLASSIFICATION:	NEW BUILD
PROJECT YEAR:	2019
FURNITURE PACKAGE:	2016 V3
DRAWING RELEASE	JANUARY 2020

WEILER ENGINEERING
P.O. BOX 832
VERADALE, WA 99037
PH. (509) 998-3068

PROJECT TYPE: NEW
SMART 55 - SQUARE

Wendy's
HIGHWAY 95
PONDERAY, ID 83852

REV.	DATE	DESCRIPTION
1	01-20-2020	JANUARY SPRINT 2020

ISSUE DATE: 08/14/2020
PROJECT NUMBER: --
DRAWN BY: dw
CHECKED BY: dw

SEAL

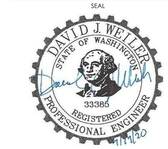

SHEET NAME
ROOF POWER PLAN

SHEET NUMBER
E2.3

8/14/2020, 12:51 PM, E:\Lexan\Projects\Wendys\ELECTRICAL\SMART 55 SQUARE (1.0) - MEP - DWG - JAN 2020\00_SMART-1.0-55-SQUARE_E2_3_Power Roof Plan.dwg, Owner

PANEL NAME: MDP

PANELBOARD INFO			
NEMA TYPE	1	MOUNTING:	IFS-SLK
VOLTAGE	120/208	BUS AMP:	600
PHASE	3	MAINS:	600A MCB
WIRE	4	AIC RATING:	65000
TYPE	MODULAR PANEL SYSTEM		

NOTES
1 SMART 1.0 ELECTRIC HEAT + COOKING

CONNECTED LOAD	KW	AMPS
PH A	112.79	940
PH B	101.59	847
PH C	99.82	832
TOTAL	314.20	872

DEMAND LOAD: 171.42 KW, 476 AMPS

CKT NO.	ZONE/ NOTE	LOAD DESCRIPTION	EQUIP #	BRKR OPTS	BRKR SIZE	KW	PHASE	KW	BRKR SIZE	BRKR OPTS	EQUIP #	LOAD DESCRIPTION	ZONE/ NOTE	CKT NO.
						14.119	A	21.345						
1		PANEL A			200/3	8.292	B	17.949	200/3			PANEL B		2
						5.151	C	21.183						
						14.633	A	14.633						
3		RTU #1		HIST	150/3	14.633	B	14.633	150/3	HIST		RTU #2		4
						14.633	C	14.633						
						33.547	A	14.510						
5		PANEL C		ST	225/3	31.279	B	14.807	200/3	ST		COOK CENTER PANEL		6
						31.219	C	12.998						

PANEL NAME: A

PANELBOARD INFO			
NEMA TYPE	1	MOUNTING:	IFS-SLK
VOLTAGE	120/208	BUS AMP:	225
PHASE	3	MAINS:	MLO
WIRE	4	AIC RATING:	10000
TYPE	MODULAR PANEL SYSTEM		

NOTES
1 SMART 1.0
2 PROVIDE THIS PANEL WITH ISOLATED GROUND BAR
3 50kA SPD, BUS CONNECTED
4 **CONTROL CIRCUITRY POWER FOR FAN CONTROL SYSTEM

CONNECTED LOAD	KW	AMPS
PH A	18.02	150
PH B	11.11	93
PH C	6.15	51
TOTAL	35.28	98

DEMAND LOAD: 30.08 KW, 83 AMPS

CKT NO.	ZONE/ NOTE	LOAD DESCRIPTION	EQUIP #	BRKR OPTS	BRKR SIZE	KW	PHASE	KW	BRKR SIZE	BRKR OPTS	EQUIP #	LOAD DESCRIPTION	ZONE/ NOTE	CKT NO.
1		POS/ COMPUTER	D0200	IG	20/1	8.800	A	0.250	20/1			EXTERIOR LED LIGHTING	5	2
3		POS/ COMPUTER	D0200	IG/G	20/1	1.000	B	0.600	20/1			BUILDING SIGNAGE	5	4
5		SHUNT TRIP POWER**		L	20/1	0.250	C	0.600	20/1			BUILDING SIGNAGE	5	6
7		DRIVE THRU WINDOW			20/1	0.800	A	0.600	20/1			BUILDING SIGNAGE	5	8
9		CUSTOMER ORDER KIOSKS		IG	20/1	1.080	B	0.600	20/1			STREET POLE SIGN	5	10
11		RESTROOM/FREEZER/COOLER LTG			20/1	0.350	C	0.600	20/1			STREET POLE SIGN	5	12
13	1	KITCHEN LIGHTS			20/1	0.250	A	0.600	20/1			DIRECTIONAL SIGNAGE (OPTIONAL)	5	14
15		KITCHEN RECEPTACLES		G	20/1	1.080	B	0.341	20/1			BUILDING LIGHTING	5	16
17	2	FRONT COUNTER LIGHTS			20/1	0.100	C	0.300	20/1			ORDER CANOPY LIGHTING	5	18
19		SNOW MELT		G	30/2	1.950	A	0.300	20/1			CANOPY HEAT TRACE (OPTIONAL)		20
21		-			~	1.950	B	0.000	20/1			EXTERIOR MENU BOARD	5	22
23	2	DINING LIGHTS			20/1	0.581	C	0.600	20/1			PRESELL MENU BOARD	5	24
25		SNOW MELT		G	30/2	1.950	A	0.250	20/1		EF-3	RESTROOM EXHAUST FAN	2	26
27		-			~	1.950	B	0.200	20/1			DINING ROOM LIGHTING	2	28
29	2	INTERIOR MENUBOARD (DIGITAL)			20/1	0.300	C	0.100	20/1			INTERIOR MENU BOARDS	2	30
31		DINING RECEPTACLES			20/1	0.540	A	0.500	20/1	IG		TV		32
33		OFFICE RECEPTACLES			20/1	0.540	B	1.200	20/1	IG		OUTDOOR LCD PEDESTAL		34
35		OFFICE RECEPTACLES			20/1	0.540	C	0.500	20/1			SITE LIGHTING	4	36
37		NETWORK HUB		IG	20/1	0.720	A	0.500	20/1			SITE LIGHTING	4	38
39		EMNIGHT LIGHTS			20/1	0.271	B	0.300	20/1			EXTERIOR MENU BOARD (DIGITAL)	5	40
41		CONTROL POWER**		L	20/1	0.250	C	1.080	20/1	G		KITCHEN RECEPTACLES		42

PANEL NAME: B

PANELBOARD INFO			
NEMA TYPE	1	MOUNTING:	IFS-SLK
VOLTAGE	120/208	BUS AMP:	225
PHASE	3	MAINS:	MLO
WIRE	4	AIC RATING:	10000
TYPE	MODULAR PANEL SYSTEM		

NOTES
1 SMART 1.0 ELEC WATER HEATER

CONNECTED LOAD	KW	AMPS
PH A	21.35	178
PH B	17.95	150
PH C	21.18	177
TOTAL	60.48	168

DEMAND LOAD: 53.65 KW, 149 AMPS

CKT NO.	ZONE/ NOTE	LOAD DESCRIPTION	EQUIP #	BRKR OPTS	BRKR SIZE	KW	PHASE	KW	BRKR SIZE	BRKR OPTS	EQUIP #	LOAD DESCRIPTION	ZONE/ NOTE	CKT NO.
1		BEVERAGE SYSTEM, PUW FREESTYLE	A0105	G	20/1	0.800	A	0.667						2
3		DINING ROOM / FREESTYLE	A0202	G	20/1	1.440	B	0.667	20/3	HW		WALK IN FREEZER		4
5		DINING ROOM / ICE MAKER	QP0222	G	20/1	0.600	C	0.667						6
7						1.933	A	0.667						8
9		FROSTY MACHINE	Q0807	G	30/3	1.933	B	0.667	20/3	HW		WALK IN COOLER		10
11						1.933	C	0.667						12
13		FULL SIZE WARMER	V0105	G	20/1	1.440	A	0.150	20/2	HW	Q01##	KITCHEN ICE MACHINE CONDENSER		14
15		RESTROOM RECEPTACLES/ BUG LIGHT			20/1	0.540	B	0.150						16
17		FULL SIZE WARMER	V0105	G	20/1	1.440	C	0.000	20/1			SPARE		18
19		FULL SIZE WARMER	V0105	G	20/1	1.440	A	0.000	20/1			SPARE		20
21		SPACE					B	0.500	20/1	mA		FREEZER CONDENSATE HEAT TRACE		22
23		ICE MACHINE-KITCHEN	QP0909	HW	20/2	0.800	C	0.800	20/1	G	Q0605	UNDER COUNTER REFRIGERATOR		24
25						1.160	A	0.676	20/2		EF-1	GRILL EXHAUST	3	26
27		WIFI/USB RECEPTACLES			20/1	0.000	B	0.676						28
29		FULL SIZE WARMER	V0105	G	20/1	1.440	C	1.440	20/1	G	V0105	FULL SIZE WARMER		30
31		REACH-IN FREEZER FULL SIZE	Q0406	G	15/1	0.600	A	0.312	15/1	G	Q0606	UNDER COUNTER REFRIGERATOR		32
33						10.000	B	0.676	20/2		EF-2	FRYER LINE EXHAUST	3	34
35		WATER HEATER	WH-1		100/3	10.000	C	0.676						36
37						10.000	A	1.500	20/1			FIREPLACE		38
39		CARBONATOR	A0304	G	20/1	0.700	B	0.000	20/1			SPARE		40
41		USED COOKING OIL SYSTEM		G	20/1	0.180	C	0.540	20/1	G		EXTERIOR RECEPTACLES		42

PANEL NAME: CC COOKCENTER SINGLE LINE WITH SALAD STATION

PANELBOARD INFO			
NEMA TYPE	1	MOUNTING:	IFS-SLK
VOLTAGE	120/208	BUS AMP:	225
PHASE	3	MAINS:	MLO
WIRE	4	AIC RATING:	10000
TYPE	MODULAR PANEL SYSTEM		

NOTES
1 SMART 1.0
2 ALL BREAKERS SHALL HAVE LOCK OFF DEVICE
3 * REFER TO CHASE DETAIL, 6/E5.1 FOR JUNCTION BOX CONNECTION
4 HARDWIRED EQUIPMENT IN THIS PANEL BY KED

CONNECTED LOAD	KW	AMPS
PH A	16.17	135
PH B	14.81	123
PH C	14.66	122
TOTAL	45.64	127

DEMAND LOAD: 27.50 KW, 76 AMPS

CKT NO.	ZONE/ JBOX	LOAD DESCRIPTION	EQUIP #	BRKR OPTS	BRKR SIZE	KW	PHASE	KW	BRKR SIZE	BRKR OPTS	EQUIP #	LOAD DESCRIPTION	ZONE/ JBOX	CKT NO.
1	G*	TOASTER	V0403	G	20/2	1.660	A	0.630	20/1	HW	E1529	MEATWELL REFRIGERATION	K*	2
3						1.660	B	0.863	20/1	G	V0608	BUN WARMER	E*	4
5	G*	TOASTER	V0403	G	20/2	1.660	C	0.756	20/1	HW	HMP6	WARMER	B*	6
7						1.660	A	0.288	20/1	HW	E1528	SANDWICH STATION REFRIGERATOR	A*	8
9		SPACE					B	0.440	20/1	G	V1903	HOLDING CABINET (MPC-22)	E*	10
11							C	0.510	20/1	HW	E1528	SANDWICH STATION CONDENSER	A*	12
13	J*	MICROWAVE	K0502	G	20/2	1.404	A	0.000	20/1	G		SPARE		14
15						1.404	B	0.440	20/1	G	V1903	HOLDING CABINET (MPC-1L)	G*	16
17	B*	WARMER	HMP6	HW	20/1	0.756	C	0.600	20/1	G	V0608	TORTILLA WRMR & HLDNG (MPC-22)	G*	18
19	K*	MEATWELL REFRIGERATION	E1529	HW	20/1	0.528	A	0.440	20/1	G	V1901	HOLDING CABINET (MCP-1L)	L*	20
21	E*	HOLDING CABINET (MPC-1L)	V1902	G	20/1	0.440	B	0.000	20/1	G		SPARE		22
23	H*	SALAD STATION CONDENSER	E1527	HW	20/1	0.528	C	0.288	20/1	HW	E1527	SALAD STATION REFRIGERATOR	H*	24
25		GRILL	K0803		60/3	5.300	A	4.260	60/3		K0803	DOUBLE SIDED GRILL		26
27						5.300	B	4.260						28
29						5.300	C	4.260						30
31		SPARE			20/1	0.000	A	0.000	20/1			SPARE		32
33		SPARE			20/1	0.000	B	0.000	20/1			SPARE		34
35		SPARE			20/1	0.000	C	0.000	20/1			SPARE		36
37		SPACE					A					SPACE		38
39		SPACE					B					SPACE		40
41		SPACE					C					SPACE		42

NEC DEMAND LOAD ALL ELECTRIC RESTAURANT

MDP

NEC TABLE 200.88	
CONNECTED kW	314.2kW
DEMAND FACTOR	10% OVER 200kW + 160.0kW
DEMAND LOAD	171.42kW

PANEL NAME: C

PANELBOARD INFO			
NEMA TYPE	1	MOUNTING:	IFS-SLK
VOLTAGE	120/208	BUS AMP:	225
PHASE	3	MAINS:	MLO
WIRE	4	AIC RATING:	10000
TYPE	MODULAR PANEL SYSTEM		

NOTES
1 SMART 1.0 ELECTRIC COOKING

CONNECTED LOAD	KW	AMPS
PH A	33.95	283
PH B	31.69	264
PH C	30.76	256
TOTAL	96.40	268

DEMAND LOAD: 63.22 KW, 175 AMPS

CKT NO.	ZONE/ NOTE	LOAD DESCRIPTION	EQUIP #	BRKR OPTS	BRKR SIZE	KW	PHASE	KW	BRKR SIZE	BRKR OPTS	EQUIP #	LOAD DESCRIPTION	ZONE/ NOTE	CKT NO.
1						2.300	A	2.500						2
		COMBI OVEN	K1401	G	30/3	2.300	B	2.500	40/2	HW	WH-2	WAREWASH WITH HEATER		
3						2.300	C	0.000						4
5						2.300	C	0.000	-	-	-	SPARE		6
7						2.496	A	1.750						8
		HIGH SPEED OVEN	K1402	G	30/2				25/2	G	A0608	COFFEE MAKER		
9						2.496	B	1.750						10
11						4.667	C	0.888	20/1	G	Q0607	2 DRAWER REFRIGERATOR		12
13						4.667	A	4.667						14
		OPEN FRYER	J1003	G	50/3				50/3	G	J1003	OPEN FRYER		
15						4.667	B	4.667						16
17						1.510	C	4.667						18
19		ICE MACHINE CONDENSER	Q01##	HW	20/2	1.510	A	0.500	20/1	G	A1301	BEVERAGE DISPENSER(BUBBLER)		20
21	3	HOOD LIGHTS			20/1	0.400	B	0.000	20/1			SPARE		22
23						4.667	C	1.350						24
		OPEN FRYER	J1003		50/3				20/2	G	A0801	TEA BREWER		
25						4.667	A	1.350						26
27						4.667	B							28
29		SHUNT TRIP SENSOR**		L	20/1	0.250	C					SPACE		30
31		ROOFTOP (HVAC) RECEPTACLES		GR	20/1	0.360	A							32
33	3	FRY LINE GENERAL		G	20/1	0.960	B	1.352						34
35		FRY DUMP CRC#1	E0703	G,LOFF	20/1	1.920	C	1.352	20/2	HW	QP0222	ICE MACHINE FOR FS#1		36
37		FRY DUMP CRC#2	E0703	G,LOFF	30/1	2.520	A	4.667						38
39		FRY DUMP CRC#3	E0703	G,LOFF	20/1	1.260	B	4.667	50/3	G	J1003	OPEN FRYER		40
41		FRY DUMP CRC#4	E0703	G,LOFF	30/1	2.520	C	4.667						42

PANEL NOTES AND OPTIONS

Breaker Options:

L	Handle lock-on device
LOFF	Handle lock-off for "OFF" positiom
H	Heating, A/C & Refrigeration
G	Ground Fault Circuit Interrupter
GR	GFCI receptacle in the chase
HW	Kitchen equipment hardw ired in the chase/equipment
ST	Shunt Trip
mA	30 Milli-Amp rated breaker
SPD	Surge Supression Unit
IG	Isolated Ground

Keyed Notes:

**	Control circuitry pow er for fan control system -ansul fire protection system and hool control.

General Notes:

1	All breakers to be 20A / 1 pole unless noted otherw ise
2	Contractor to furnish tw o "handle padlock attachments" for circuit breakers. attachment pieces to be provided to the ow ner or to be installed in the panelboard for easy access by an electrical contractor performing maintenance on electrical equipment requiring a disconnecting means, capable of being padlocked.

CONTROL ZONES

ZONE 1 KITCHEN LIGHTS & WORK LIGHTS
ZONE 2 DINING ROOM - GENERAL LIGHTS
ZONE 3 HOODS
ZONE 4 PARKING LOT LIGHTS
ZONE 5 EXTERIOR BUILDING LIGHTS/ BUILDING SIGNS/ MENU BOARDS
ZONE 6 NOT USED
ZONE 7 NOT USED

*SEE SHEET W1.1 FOR LIGHT ZONE CONTROL INFORMATION.

SERIES RATED NOTES

1. MAIN BREAKERS IN MDP TO BE "FULLY" RATED TO WITHSTAND THE AVAILABLE FAULT CURRENT AT M.D.P. OF 65,000 AMPS R.M.S.
2. THE DISTRIBUTION SYSTEM IS TO BE A "SERIES" RATED, TWO-TIER 65/10 SYSTEM.
3. MOTOR LOAD CONTRIBUTION TO THESE PANELBOARDS SHALL NOT EXCEED 1.0% OF THE PANELBOARD A.I.C. RATING.
4. WHERE "SERIES" RATING IS USED, PANELBOARDS AND DISTRIBUTION PANELS ARE TO BE LEGIBLY MARKED TO INDICATE THE EQUIPMENT HAS BEEN APPLIED WITH A "SERIES" COMBINATION RATING. LABELS CAN BE FACTORY INSTALLED OR ENGRAVED PLASTIC-LAMINATE CARD. MARKING SHALL COMPLY WITH ARTICLE 110-22 OF N.E.C.

ARC FLASH LABELING

A. SWITCHBOARDS, PANELBOARDS AND BUSWAY SHALL HAVE A COMMERCIALLY PRODUCED PERMANENT LABEL APPLIED, SIMILAR TO IMAGE BELOW, TO WARN OF POTENTIAL ARC FLASH HAZARDS IN ACCORDANCE WITH NEC 110.16 AND NFPA 70E
B. LABELING MAY BE COMPLETED BY THE CONTRACTOR. THE CONTRACTOR SHALL VERIFY THAT SWITCHBOARDS AND PANELBOARDS ARE PROPERLY LABELED IN THE FIELD.
C. PROVIDE AND INSTALL A LABEL SIMILAR TO BELOW TO COMPLY WITH NEC 110.16 AND NFPA 70E. THE MARKING SHALL BE LOCATED SO AS TO BE CLEARLY TO QUALIFIED PERSONS BEFORE EXAMINATION, ADJUSTMENT, SERVICING OR MAINTENANCE OF THE EQUIPMENT. LABEL SHALL NOT BE LOCATED ON A HINGED DOOR, OR A MOVABLE SERVICE.

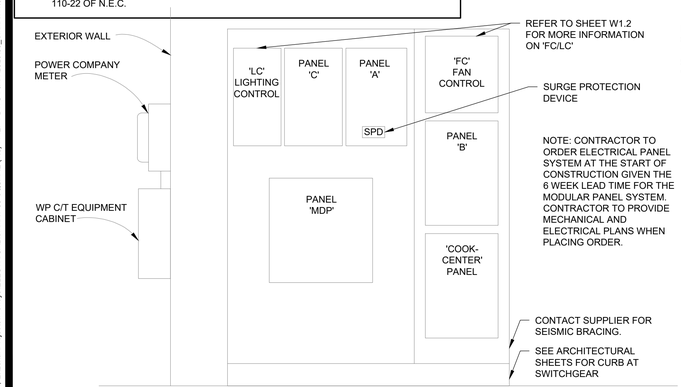

NOTE:
CONTRACTOR TO DOWNLOAD AND EXECUTE MODULAR PANEL SYSTEM'S START UP AND SYSTEM CHECK LIST REQUIREMENTS FROM WENDY'S.

NOTE: CONTRACTOR TO ORDER ELECTRICAL PANEL SYSTEM AT THE START OF CONSTRUCTION GIVEN THE 6 WEEK LEAD TIME FOR THE MODULAR PANEL SYSTEM. CONTRACTOR TO PROVIDE MECHANICAL AND ELECTRICAL PLANS WHEN PLACING ORDER.

ELECTRICAL DISTRIBUTION ELEVATION (CPI) 3
NOT TO SCALE

SUB FEEDERS TO PANELS "A", "B", "C" AND "COOKCENTER" ARE PREWIRED AND PREINSTALLED INSIDE THE MODULAR PANEL SYSTEM.

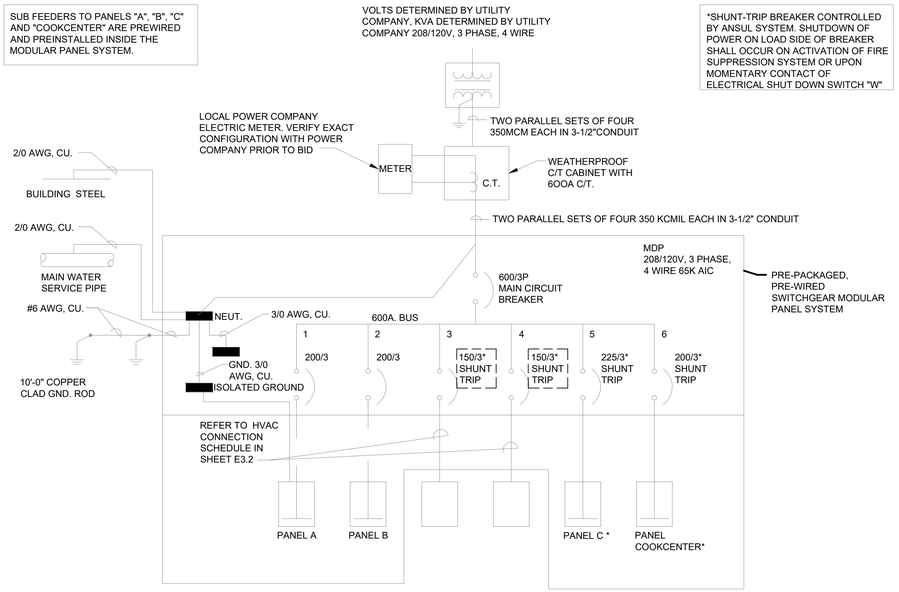

ELECTRICAL DISTRIBUTION GENERAL NOTES

1. PANELS "A", "B" , "C" AND "COOKCENTER" SHALL BE CIRCUITED AS SHOWN.
2. THERMOSTATS TO BE PROVIDED WITH "FC/LC" FAN CONTROL/LIGHTING CONTROL PANEL ALONG WITH REMOTE SENSORS.
3. SYSTEM IS DESIGNED TO FORCE EXHAUST FANS ON WHEN ANSUL SYSTEM ACTIVATES TO MEET CODE REQUIREMENTS.

ELECTRICAL ONE-LINE DIAGRAM
NOT TO SCALE

SITE NUMBER:	00000
BASE MDL:	SMART 55 - SQUARE 2019
ASSET TYPE:	COMP./FRAN
CLASSIFICATION:	NEW
OWNER:	OWNER NAME
BASE VERSION:	2019
UPGRADE CLASSIFICATION:	NEW BUILD
PROJECT YEAR:	2019
FURNITURE PACKAGE:	2016 V3
DRAWING RELEASE	JANUARY 2020

WEILER ENGINEERING
P.O. BOX 832
VERADALE, WA 99037
PH. (509) 998-3068

PROJECT TYPE: NEW
SMART 55 - SQUARE

HIGHWAY 95
PONDERAY, ID 83852

REV.	DATE	DESCRIPTION
	01-20-2020	JANUARY SPRINT 2020
1	01--14--2020	ADDED SNOW MELT CKT

ISSUE DATE: 08/14/2020
PROJECT NUMBER: --
DRAWN BY: dw
CHECKED BY: dw

SEAL

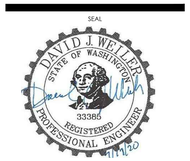

SHEET NAME
ELECTRIC DISTRIBUTION (ALL ELECTRIC)

SHEET NUMBER
E3.1

8/14/2020, 12:55 PM, E:\Lexan\Projects\Wendys\ELECTRICAL\SMART 55 SQUARE (1.0) - MEP - DWG - JAN 2020\90_SMART-1.0-55-SQUARE_E3_1_Electrical Distribution.dwg, Owner

FIXTURE & EQUIPMENT CONNECTION SCHEDULE

VERIFY QUANTITIES WITH ARCHITECTURAL EQUIPMENT PLAN AND SCHEDULE.

SYMBOL	QUANTITY	GENERAL FIXTURE DESCRIPTION	KILOWATTS	VOLTAGE/PHASE	CONNECTIONS TYPE	CONNECTIONS PLUG CORD FURNISHED *	FEEDER CONDUCTORS**	FEEDER WIRE SIZE	FEEDER GROUND SIZE	FEEDER CONDUIT SIZE	REMARKS
KITCHEN EQUIPMENT - FRONT COUNTER											
Q0607	1	REFRIGERATOR - FRONT COUNTER	.888	120V/1PH	DUPLEX RECEPTACLE	ES	2	#12	#12	½"	
KITCHEN EQUIPMENT - BEVERAGE LINE											
A0608	1	COFFEE BREWER	2.680	120/208V-1PH	L14-20R RECEPTACLE	EC	3	#12	#12	½"	
A1301	1	BEVERAGE DISPENSER (BUBBLER)	.396	120V/1PH	DUPLEX RECEPTACLE	EC	2	#12	#12	½"	
~~Q0606~~	~~1~~	~~REFRIGERATOR, UNDER COUNTER - 2 DRAWERS~~	~~.312~~	~~120V/1PH~~	~~DUPLEX RECEPTACLE~~	~~EC~~	~~2~~	~~#12~~	~~#12~~	~~½"~~	
Q0807	1	FROSTY MACHINE - DUAL HEAD	5.8	208V/3PH	L15-30R RECEPTACLE	EC	3	#10	#10	¾"	(1)
SINGLE LINE COOK CENTER											
E1528	1	SANDWICH STATION REFRIGERATOR	.690	120V/1PH	JUNCTION BOX 'A' IN CHASE #EP1528	ES	2	#12	#12	½"	
E1528	1	SANDWICH STATION CONDENSING UNIT	.172	120V/1PH	JUNCTION BOX 'A' IN CHASE #EP1528	ES	2	#12	#12	½"	
	2	HMP6 WARMER	.756	120V/1PH	JUNCTION BOX 'B' IN CHASE #EP1528	ES	2	#12	#12	½"	
V0608	1	BUN WARMER	.600	120V/1PH	JUNCTION BOX 'E' IN CHASE #EP1528	ES	2	#12	#12	½"	
V1903	1	MPC-22 - WARMER	.399	120V/1PH	JUNCTION BOX 'E' IN CHASE #EP1528	ES	2	#12	#12	½"	
V1902	1	MPC-1L - WARMER	.110	120V/1PH	JUNCTION BOX 'E' IN CHASE #EP1528	ES	2	#12	#12	½"	
V0608	1	BUN WARMER	.600	120V/1PH	JUNCTION BOX 'E' IN CHASE #EP1528	ES	2	#12	#12	½"	
D0100	1	POS SCREENS	.1	120V/1PH	JUNCTION BOX 'F' IN CHASE #EP1528	ES	2	#12	#12	½"	(2)
V0403	2	TOASTER	2.8	208V/1PH	JUNCTION BOX 'G' IN CHASE #EP1528	ES	2	#12	#12	½"	
V1902	1	MPC-1L - WARMER	.110	120V/1PH	JUNCTION BOX 'G' IN CHASE #EP1528	ES	2	#12	#12	½"	
V1903	1	MPC-22 - WARMER	.399	120V/1PH	JUNCTION BOX 'G' IN CHASE #EP1528	ES	2	#12	#12	½"	
E1527	1	SALAD STATION	1.726	120V/1PH	JUNCTION BOX 'H' IN CHASE #EP1528	ES	2	#12	#12	½"	
K0502	1	MICROWAVE	1.726	208V/1PH	JUNCTION BOX 'J' IN CHASE #EP1528	ES	2	#12	#12	½"	
E1529	1	MEATWELL REFRIGERATION	1.726	120V/1PH	JUNCTION BOX 'K' IN CHASE #EP1528	ES	2	#12	#12	½"	
V1902	1	MPC-1L	.110	120V/1PH	JUNCTION BOX 'L' IN CHASE #EP1528	ES	2	#12	#12	½"	
K0803	1	C806 GRILL - LEFT SIDE	15.9	208V/3PH	SPECIAL RECEPTACLE NEMA 15-60	EC	3	6	10	1 1/4"	
K0803	1	C806 GRILL - RIGHT SIDE	12.8	208V/3PH	SPECIAL RECEPTACLE NEMA 15-60	EC	3	6	10	1 1/4"	
KITCHEN EQUIPMENT - FRYLINE											
J1003	1	OPEN FRYER - 4 WELL	18.7	208V/3PH	SPECIAL RECEPTACLE NEMA 15-50	EC	3	#6	#10	1"	
K1401	1	COMBI OVEN	6.8	208V/3PH	SPECIAL RECEPTACLE NEMA 15-30	EC	3	#10	#10	¾"	
K1402	1	OVEN, HIGH SPEED	5.7	208V/1PH	SPECIAL RECEPTACLE NEMA 6-30	EC	3	#10	#10	¾"	
Q0406	1	FREEZER, UPRIGHT - 1 DOOR	1.08	120V/1PH	DUPLEX RECEPTACLE	EC	2	#12	#12	½"	
Q0605	1	REFRIGERATOR, UNDERCOUNTER - 1 DOOR	.480	120V/1PH	DUPLEX RECEPTACLE	EC	2	#12	#12	½"	
V0105	5	FULL SIZE WARMER	1.4	120V/1PH	DUPLEX RECEPTACLE	EC	2	#12	#12	½"	
E0703	1	FRY DUMP	1.92	120V/1PH	JUNCTION BOX IN FRY DUMP CHASE #2	ES	2	#12	#12	½"	
E0703	1	FRY DUMP	2.52	120V/1PH	JUNCTION BOX IN FRY DUMP CHASE #2	ES	2	#10	#10	¾"	
E0703	1	FRY DUMP	1.26	120V/1PH	JUNCTION BOX IN FRY DUMP CHASE #2	ES	2	#12	#12	½"	
E0703	1	FRY DUMP	2.52	120V/1PH	JUNCTION BOX IN FRY DUMP CHASE #2	ES	2	#10	#10	¾"	
KITCHEN EQUIPMENT - PREP AREA / WAREWASH											
A0801	1	TEA BREWER	2.704	120/208V/1PH	SPECIAL RECEPTACLE L14-20P	EC	3	#12	#12	½"	
T2061	1	WAREWASH MACHINE	1.4	120V/1PH	DUPLEX RECEPTACLE NEMA 5-20	EC	2	#12	#12	½"	
-		-		-	-	-	-	-	-	-	
T2062	1	WAREWASH MACHINE W/BOOSTER	5.0	208V/1PH	HARDWIRED	EC	2	#10	#10	¾"	
KITCHEN EQUIPMENT - DRINK EQUIPMENT											
QP0909	1	ICE MAKER (CUBER), WITH BIN - KITCHEN	2.7	208V/1PH	WP DISCONNECT AT UNIT	EC	2	#10	#10	¾"	
Q01##	1	ICE MAKER REMOTE	.260	208V/1PH	WP DISCONNECT AT UNIT	EC	2	#10	#10	¾"	
OFFICE/EMPLOYEE AND SAFETY											
N0501	1	SMART SAFE (OPTIONAL)			DUPLEX RECEPTACLE	EC	2	#12	#12	½"	
DINING ROOM - DRINK STAND											
A0202	2	FREESTYLE BEVERAGE SYSTEM (SELF-SERVE - DINING ROOM)	.800	120V/1PH	DUPLEX RECEPTACLE	EC	2	#12	#12	½"	
QP0222	1	ICE MAKER (CUBER) - DINING ROOM	2.7	208V/1PH	WP DISCONNECT AT UNIT	EC	2	#10	#10	¾"	
Q01##	1	ICE MAKER REMOTE	.260	208V/1PH	WP DISCONNECT AT UNIT	EC	2	#10	#10	¾"	
POS SYSTEM AND KIOSK											
D0101	4	POS SCREENS	.1	120V/1PH	DUPLEX RECEPTACLE	EC	2	#12	#12	½"	(2), (5)
A0105	1	DRIVE THROUGH - FREESTYLE	.8	120V/1PH	DUPLEX RECEPTACLE	EC	2	#12	#12	½"	

REMARKS (#)

1. ELECTRICAL CONTRACTOR TO PROVIDE 9' CORD WITH NEMA 15-30 PLUG.
2. DEDICATED CIRCUIT WITH ISOLATED GROUND.
3. REFER TO MANUFACTURER'S INSTALLATION INSTRUCTIONS.
4. MOUNTING HEIGHT AS DIRECTED BY EQUIPMENT SUPPLIER.
5. SEE SHEET E2.2 FOR LOCATIONS.

GENERAL NOTES

A. EC - EQUIPMENT FURNISHED BY ELECTRICAL CONTRACTOR. ES - EQUIPMENT SHALL BE PREWIRED BY EQUIPMENT SUPPLIER, FIELD CONNECTIONS BY ELECTRICIAN.

B. ELECTRICAL CONTRACTOR SHALL MAKE ALL FINAL CONNECTIONS TO KITCHEN EQUIPMENT.

C. ALL HARDWIRED CONNECTIONS TO BE MADE WITH SEAL-TIGHT FLEXIBLE METAL CONDUIT WITH INSULATED GROUND WIRE INSTALLED WITH PHASE AND NEUTRAL CONDUCTORS. GROUND WIRE TO BE BONDED AT BOTH ENDS.

D. ELECTRICAL CONTRACTOR SHALL VERIFY ALL EQUIPMENT REQUIREMENTS (INCLUDING THOSE SCHEDULED) WITH SUPPLIER PRIOR TO ROUGH-IN.

E. ALL 15A AND 20A, 120V RECEPTACLES IN KITCHEN SHALL BE GFCI PROTECTED

F. PROVIDE (5)#10 AND (1)#10 GROUND IN 3/4" CONDUIT FROM EQUIPMENT TO REMOTE UNIT. COORDINATE EXACT REQUIREMENTS WITH MANUFACTURER AND MAKE ALL FINAL CONNECTIONS REQUIRED FOR PROPER OPERATION.

*HVAC MOTORS & EQUIPMENT CONNECTIONS

MARK	SERVING	MOCP	V/P	UNIT LOCATION	DISCONNECT: FACTORY INSTALLED DISCONNECT	DISCONNECT: WP. DISCONNECT SWITCH	DISCONNECT: INTEGRAL WITH EQUIPMENT	DISCONNECT: MAGNETIC	DISCONNECT: STARTER - INTEGRAL WITH EQUIPMENT	STARTER LOCATION: NEAR UNIT	STARTER LOCATION: EQUIPMENT PANEL	STARTER LOCATION: ROOM NUMBER	SWITCH OR BREAKER	CONTROL: INTERLOCK WITH THERMOSTAT	CONTROL: HAND-OFF AUTO SELECTOR SWITCH	SEE NOTE	WIRING BY	CONDUCTORS (GROUND NOT INCLUDED)	FEEDER: WIRE SIZE	FEEDER: GROUND SIZE
EF-1	GRILL EXHAUST	20	208/1	ROOF	X		X		X	X	X				X		EC	2	10	10
EF-2	FRYER EXHAUST	20	208/1	ROOF	X		X		X	X	X				X		EC	2	10	10
EF-3	RESTROOM EXHAUST	20	115/1	ROOF	X		X		X	X			X				EC	2	12	12
RTU-1	CARRIER - GAS WITH POWER EXHAUST	90	208/3	ROOF	X		X		X	X				X			EC	3	3	8
RTU-2	CARRIER - GAS WITH POWER EXHAUST	90	208/3	ROOF	X		X		X	X				X			EC	3	3	8
RTU-1	CARRIER - GAS	80	208/3	ROOF	X		X		X	X				X			EC	3	3	8
RTU-2	CARRIER - GAS	80	208/3	ROOF	X		X		X	X				X			EC	3	3	8
RTU-1	TRANE - GAS	80	208/3	ROOF	X		X		X	X				X			EC	3	4	8
RTU-2	TRANE - GAS	80	208/3	ROOF	X		X		X	X				X			EC	3	4	8
RTU-1	AAON- GAS	70	208/3	ROOF	X		X		X	X				X			EC	3	4	8
RTU-2	AAON- GAS	70	208/3	ROOF	X		X		X	X				X			EC	3	4	8
RTU-1	CARRIER - ELEC WITH POWER EXHAUST	175	208/3	ROOF	X		X		X	X				X			EC	3	2/0	6
RTU-2	CARRIER - ELEC WITH POWER EXHAUST	175	208/3	ROOF	X		X		X	X				X			EC	3	2/0	6
RTU-1	CARRIER - ELEC	150	208/3	ROOF	X		X		X	X				X			EC	3	1/0	6
RTU-2	CARRIER - ELEC	150	208/3	ROOF	X		X		X	X				X			EC	3	1/0	6
RTU-1	TRANE - ELEC	175	208/3	ROOF	X		X		X	X				X			EC	3	2/0	6
RTU-2	TRANE - ELEC	175	208/3	ROOF	X		X		X	X				X			EC	3	2/0	6
RTU-1	AAON- ELEC	175	208/3	ROOF	X		X		X	X				X			EC	3	2/0	6
RTU-2	AAON- ELEC	175	208/3	ROOF	X		X		X	X				X			EC	3	2/0	6

SITE NUMBER:	00000
BASE MDL:	SMART 55 - SQUARE 2019
ASSET TYPE:	COMP./FRAN
CLASSIFICATION:	NEW
OWNER:	OWNER NAME
BASE VERSION:	2019
UPGRADE CLASSIFICATION:	NEW BUILD
PROJECT YEAR:	2019
FURNITURE PACKAGE:	2016 V3
DRAWING RELEASE	JANUARY 2020

WEILER ENGINEERING
P.O. BOX 832
VERADALE, WA 99037
PH. (509) 998-3068

PROJECT TYPE: NEW
SMART 55 - SQUARE

HIGHWAY 95
PONDERAY, ID 83852

REV.	DATE	DESCRIPTION
1	01-20-2020	JANUARY SPRINT 2020

ISSUE DATE: 08/14/2020
PROJECT NUMBER: --
DRAWN BY: dw
CHECKED BY: dw

SEAL
DAVID J. WEILER
STATE OF WASHINGTON
33386
REGISTERED PROFESSIONAL ENGINEER
1-14-20

SHEET NAME
Kitchen Equipment Schedule

SHEET NUMBER
E3.2

8/14/2020, 1:02 PM, E:\Lexar\Projects\Wendys\ELECTRICAL\SMART 55 SQUARE (1.0) - MEP - DWG - JAN 2020\90_SMART 1.0-55-SQUARE_E3.2_Kitchen Equipment Schedule.dwg, Owner

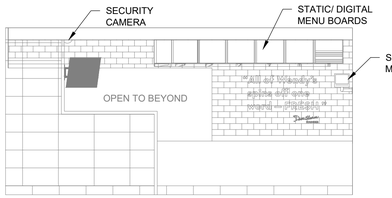

SECURITY CAMERA LOCATION (7)
NOT TO SCALE

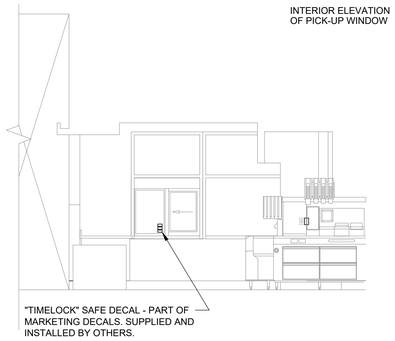

PUW DECALS (6)
NOT TO SCALE

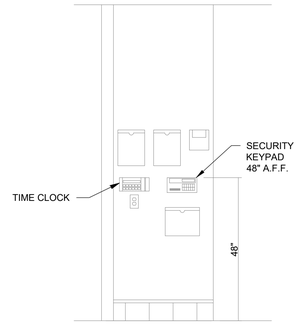

SECURITY KEYPAD LOCATION (5)
NOT TO SCALE

SECURITY LEGEND

MARK	ITEM	MOUNTING NOTES
DC	DOOR CONTACT	IN FRAME HEAD ON LATCH SIDE OF OPENING
MD	MOTION DETECTOR (360 DEGREE CEILING MOUNTED)	CEILING MOUNT
WP	WALK-IN PANIC BUTTON	WALL MOUNT 12" TO 18" A.F.F.
KP	KEYPAD	WALL MOUNT 65" A.F.F.
CP	CONTROL PANEL	WALL MOUNT ABOVE DOOR
SS	SIREN / STROBE	SIREN JUST ABOVE CEILING STROBE SURFACE MOUNTED ON CEILING
OS	OFFICE SAFE	SEE SAFE INSTRUCTION
DB	DROPBOX	BOLTED DOWN UNDER REGISTER
CX	CAMERA	WALL MOUNT 8" BELOW CEILING -OR- CEILING MOUNT
	SECURITY MONITOR	POST MOUNTED TIGHT TO UNDERSIDE OF STRUCTURE ADDITIONAL 120 VAC POWER REQUIRED
DR	DVR	MOUNTED INSIDE UPPER CABINET IN MANAGERS OFFICE. ADDIATIONAL 120 VAC AC POWER REQUIRED
AS	SMART SAFE	BOLTED DOWN UNDER REGISTER(S)

SECURITY CAMERA LOCATION

CAMERAL LOCATION	LEVEL RECOMMENDED	CAMERAL LOCATION	LEVEL RECOMMENDED
C1 DINING ROOM #1	LEVEL 1 THRU 3	C7 PATIO (IF EXISTING)	LEVEL 1 THRU 3
C2 FRONT COUNTER	LEVEL 1 THRU 3	C8 EXTERIOR MENUBOARD	LEVEL 2 THRU 3
C3 PICK-UP WINDOW	LEVEL 1 THRU 3	C9 DRIVE THRU #1	LEVEL 2 & 3
C4 PAY WINDOW	LEVEL 1 THRU 3	C10 DRIVE THRU #2	LEVEL 3
C5 BACK DOOR/OFFICE	LEVEL 1 THRU 3	C11 MAIN ENTRANCE DOOR	LEVEL 3
C6 RESTROOM HALLWAY	LEVEL 1 THRU 3		

GENERAL NOTES

1. IN AREAS WITHOUT CEILINGS OR WHERE ANY CONDUITS, CONDUCTORS, FEEDERS. OR LOW-VOLTAGE CABLING IS VISIBLE, ALL WRITING SHALL BE IN RIGID GALVANIZED STEEL (RGSC) OR THIN WALL EMT CONDUIT. BX, AC, AND MC CABLE ARE NOT PERMITTED. CONDUITS ARE TO BE RUN TIGHT TO DECK EITHER PARALLEL OR PERPENDICULAR TO BUILDING LINES AND ONLY DROP AT POINT OF CONNECTION. WHERE EXPOSED TO VIEW, ALL MATERIALS (CONDUITS. JUNCTION BOXES, ETC.) SHALL BE INSTALLED IN AN ORDERLY FASHION AND SHALL BE CLEAN AND FREE FROM ALL VISIBLE MARKING. JUNCTION BOXES SHALL HAVE CIRCUIT NUMBERS WRITTEN ON THE INSIDE OF THE JUNCTION BOX COVER. WHEN RIGID CONDUIT IS PERMITTED FOR SECURITY CAMERA/ ALARM, TO BE INSTALLED BY SYSTEM INSTALLER.

SAFE NOTES

A. THE SAFE IS PROVIDED WITH A 3/4" DIAMETER ANCHOR HOLE IN THE BOTTOM. ALONG WITH A LEAD SHIELD ANCHOR ASSEMBLY FOR FIELD INSTALLATION.

B. SAFE ANCHORING TO BE DONE BY LOCKSMITH.

C. THE SAFE IS TO BE ANCHORED TO THE FLOOR TO MAXIMIZE SECURITY.

D. FOR PROPER INSTALLATION FOLLOW STEPS BELOW:(ANCHOR ASSEMBLY 1/2-13 THREAD)

1. MARK THE AREA DESIRED FOR ANCHORING
2. DRILL INTO FLOOR WITH A 1" DIAMETER MASONRY BIT 1" DEEP
3. DIS-ASSEMBLE THE ANCHORING BOLT/WASHER FROM THE LEAD SHIELD ASSEMBLY
4. TAP THE LEAD SHIELD ANCHOR IN THE FLOOR FLUSH WITH THE SURFACE
5. LOCATE AND ALIGN THE HOLE IN THE BOTTOM OF THE SAFE WITH THE LEAD SHIELD ANCHOR IN THE FLOOR.
6. INSTALL THE FLAT WASHER/BOLT THROUGH THE BOTTOM OF THE SAFE AND TIGHTEN SECURELY. BY DOING SO, THE SLEEVE ON THE ANCHOR ASSEMBLY WILL SWELL, WEDGING THE ANCHOR TO THE FLOOR.

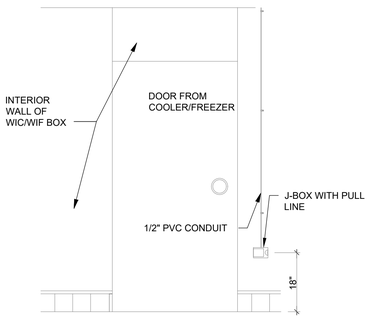

INTERIOR ELEVATION OF COOLER/FREEZER

WALK-IN PANIC BUTTON (4)
NOT TO SCALE

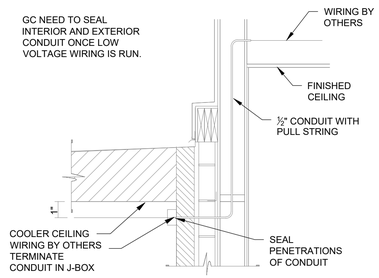

SECURITY WIRING DETAIL (3)
NOT TO SCALE

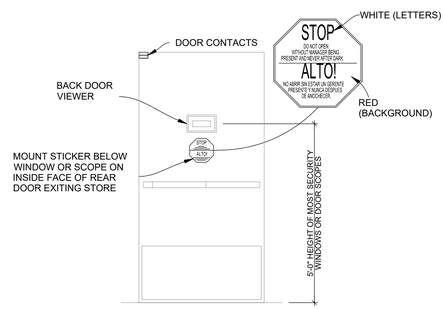

SECURITY SIGN LOCATION (2)
NOT TO SCALE

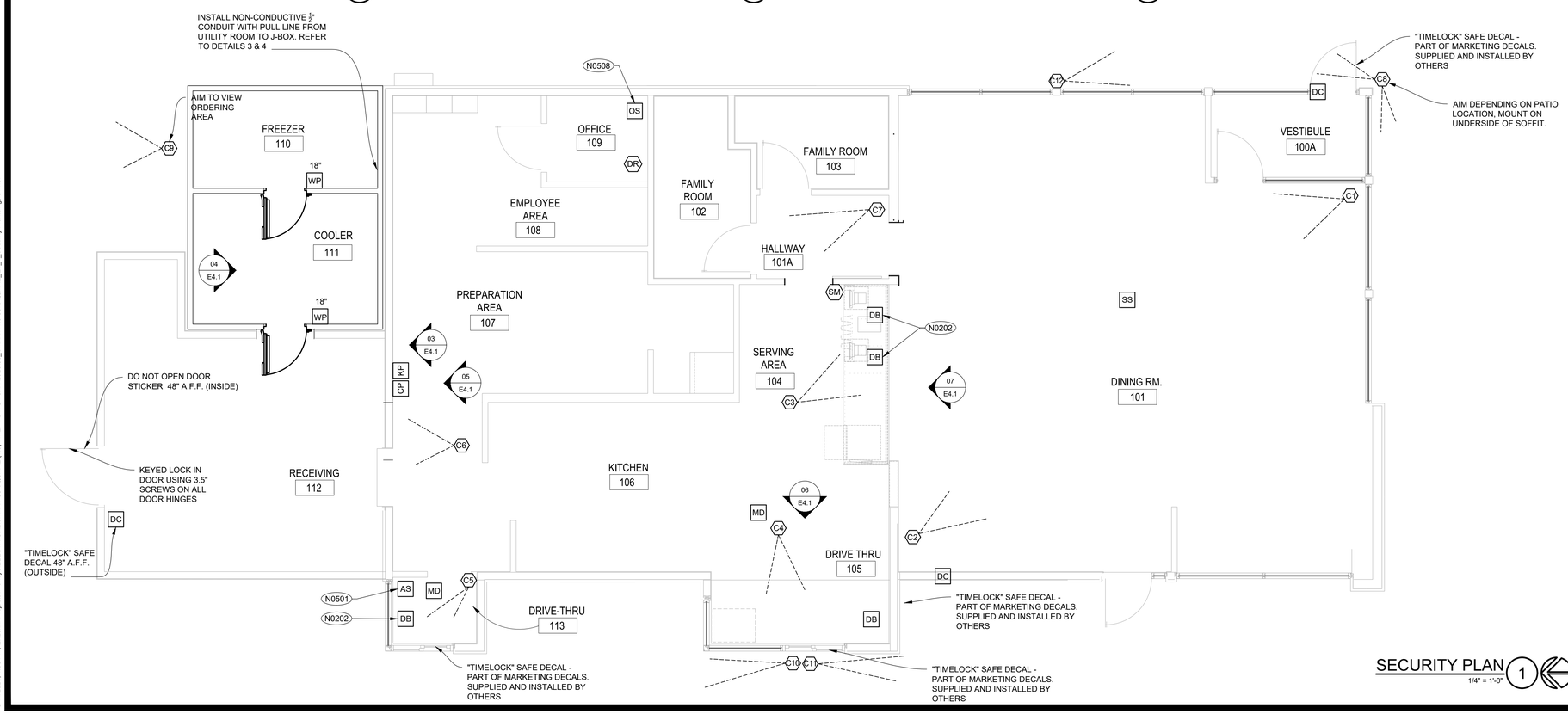

SECURITY PLAN (1)
1/4" = 1'-0"

SITE NUMBER:	00000
BASE MDL:	SMART 55 - SQUARE 2019
ASSET TYPE:	COMP./FRAN
CLASSIFICATION:	NEW
OWNER:	OWNER NAME
BASE VERSION:	2019
UPGRADE CLASSIFICATION:	NEW BUILD
PROJECT YEAR:	2019
FURNITURE PACKAGE:	2016 V3
DRAWING RELEASE	JANUARY 2020

WEILER ENGINEERING
P.O. BOX 832
VERADALE, WA 99037
PH. (509) 998-3068

PROJECT TYPE: NEW
SMART 55 - SQUARE

Wendy's
HIGHWAY 95
PONDERAY, ID 83852

REV.	DATE	DESCRIPTION
1	01-20-2020	JANUARY SPRINT 2020

ISSUE DATE: 08/14/2020
PROJECT NUMBER: --
DRAWN BY: dw
CHECKED BY: dw

SEAL
DAVID J. WEILER
STATE OF WASHINGTON
33385
REGISTERED PROFESSIONAL ENGINEER
8/14/20

SHEET NAME
SECURITY PLAN

SHEET NUMBER
E4.1

8/14/2020, 1:03 PM, E:\Lesar\Projects\Wendy's\ELECTRICAL\SMART 55 SQUARE (1.0) - MEP - DWG - JAN 2020\90_SMART-1.0-55-SQUARE_E4_1_Security Plan.dwg, Owner

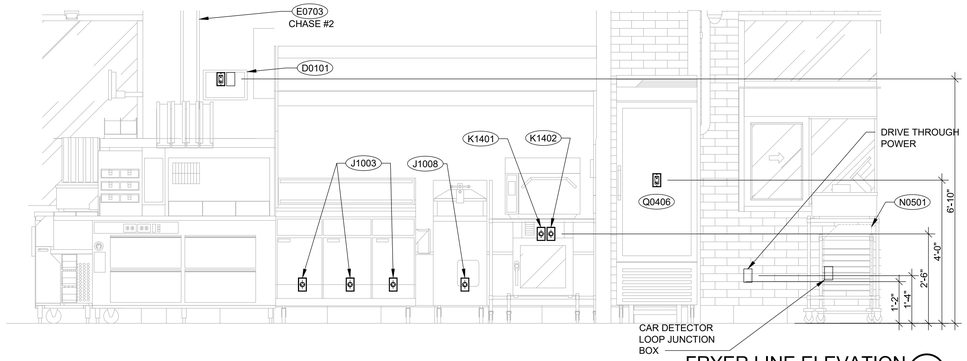

FRYER LINE ELEVATION (3)
NOT TO SCALE

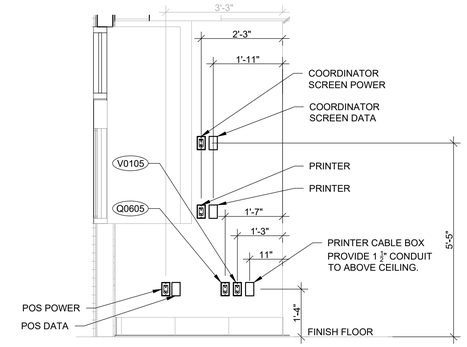

DRIVE THRU BACK COUNTER (2)
1/2" = 1'-0"

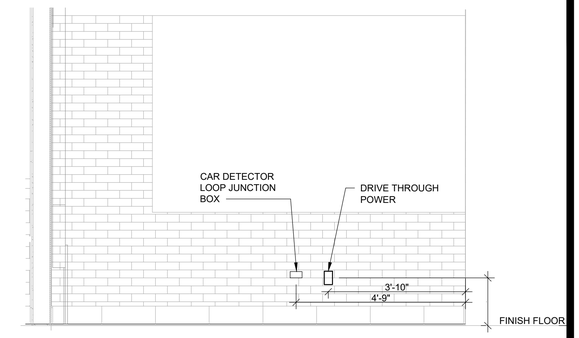

DRIVE THRU KITCHEN 1
1/2" = 1'-0"

NOTE:
PROVIDE ALL WIRING AND RECEPTACLES. MAKE ALL FINAL CONNECTIONS AND TERMINATIONS.

REFER TO SHEET E3.2 FOR RECEPTACLE INFORMATION.

REFER TO RECEPTACLE AND COVER PLATE LEGEND FOR ADDITIONAL INFORMATION

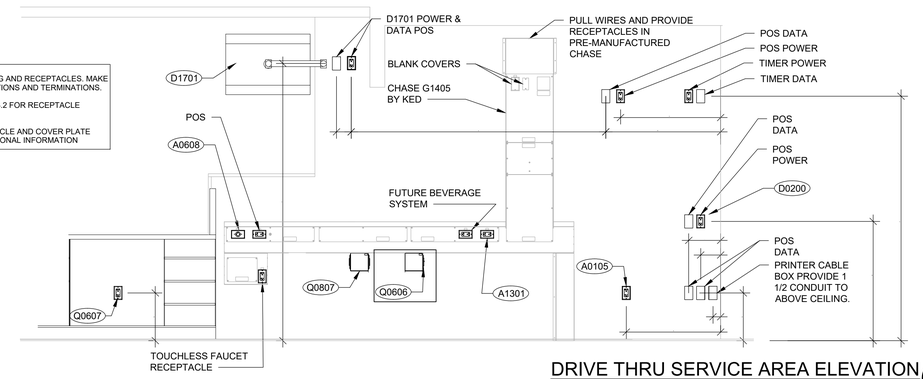

DRIVE THRU SERVICE AREA ELEVATION (5)
NOT TO SCALE

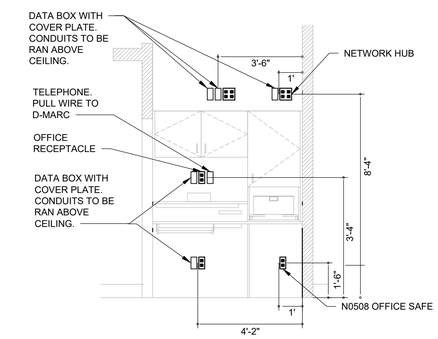

OFFICE WALL DETAIL (4)
NOT TO SCALE

SEPARATE FEED JUNCTIONS BOX SCHEDULE

SINGLE LINE COOK CENTER

EQ. NO.	DESCRIPTION	CONNECTED THROUGH	CIRCUIT NO.
E1528	SANDWICH STATION REFRIGERATOR	JUNCTION BOX 'A'	CC-12
E1528	SANDWICH STATION CONDENSING UNIT (ROOF)	JUNCTION BOX 'A'	CC-12
	HMP6 BUILT IN WARMER	JUNCTION BOX 'B'	CC-6
	HMP8 BUILT IN WARMER	JUNCTION BOX 'B'	CC-17
V0608	BUN WARMER	JUNCTION BOX 'E'	CC-4
V1903	MPC-22 - WARMER	JUNCTION BOX 'E'	CC-10
V1902	MPC-1L - WARMER	JUNCTION BOX 'E'	CC-21
V0608	BUN WARMER	JUNCTION BOX 'E'	CC-4
D0201	KITCHEN VIDEO SCREEN	JUNCTION BOX 'F'	A-1
V0403	TOASTER	JUNCTION BOX 'G'	CC-1,3
V1902	MPC-1L - WARMER	JUNCTION BOX 'G'	CC-16
V1903	MPC-22 - WARMER	JUNCTION BOX 'G'	CC-18
E1527	SALAD STATION REFRIGERATION	JUNCTION BOX 'H'	CC-24
E1527	SALAD STATION CONDENSER	JUNCTION BOX 'H'	CC-23
K0502	MICROWAVE	JUNCTION BOX 'J'	CC-13,15
E1529	MEATWELL REFRIGERATION	JUNCTION BOX 'K'	CC-19
V1902	MPC-1L - WARMER	JUNCTION BOX 'L'	CC-20
K0803	C806 GRILL - LEFT SIDE	SPECIAL RECEPTACLE NEMA 15-60	CC-25,27,29
K0803	C806 GRILL - RIGHT SIDE	SPECIAL RECEPTACLE NEMA 15-60	CC-26,28,30

NOTE:
E1528 COOKCENTER IS UL LISTED.

STANDARD RECEPTACLE IN COOKCENTER WITH GFI BREAKERS.

CHASES ARE PRE-WIRED. PULL WIRES TO CONNECT PANEL CIRCUITS TO CORRESPONDING EQUIPMENT IN THE CHASE J-BOXES. REFER TO SEPARATE FEEDS JUNCTION BOX SCHEDULE AND KITCHEN EQUIPMENT SCHEDULE.

VERIFY CONFIGURATIONS WITH SHOP DRAWINGS.

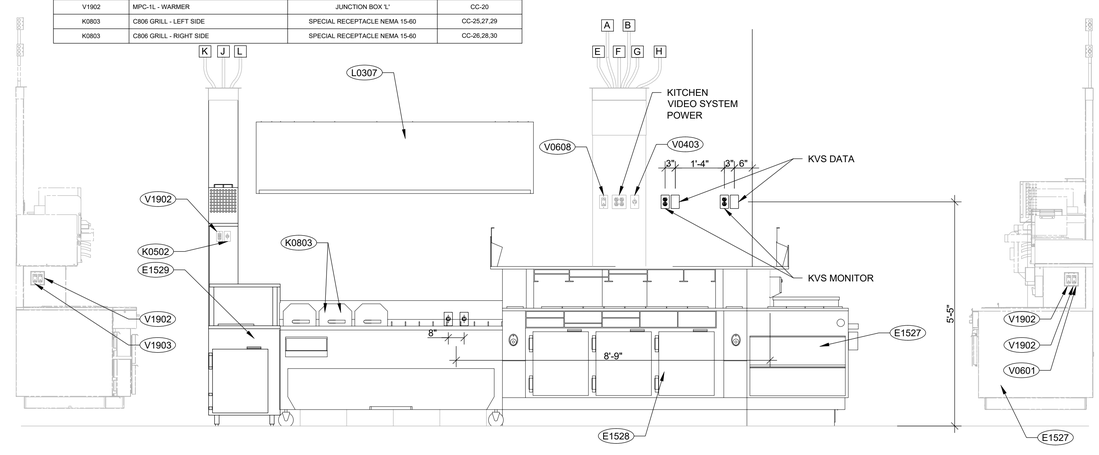

GRILL LINE ELEVATION (6)
NOT TO SCALE

SITE NUMBER:	00000
BASE MDL:	SMART 55 - SQUARE 2019
ASSET TYPE:	COMP./FRAN
CLASSIFICATION:	NEW
OWNER:	OWNER NAME
BASE VERSION:	2019
UPGRADE CLASSIFICATION:	NEW BUILD
PROJECT YEAR:	2019
FURNITURE PACKAGE:	2016 V3
DRAWING RELEASE	JANUARY 2020

WEILER ENGINEERING
P.O. BOX 832
VERADALE, WA 99037
PH. (509) 998-3068

PROJECT TYPE: NEW
SMART 55 - SQUARE

Wendy's
HIGHWAY 95
PONDERAY, ID 83852

REV.	DATE	DESCRIPTION
1	01-20-2020	JANUARY SPRINT 2020

ISSUE DATE: 08/14/2020
PROJECT NUMBER: --
DRAWN BY: dw
CHECKED BY: dw

SEAL
DAVID J. WEILER
STATE OF WASHINGTON
33385
REGISTERED
PROFESSIONAL ENGINEER
11-14-20

SHEET NAME
ELECTRICAL ELEVATIONS

SHEET NUMBER
E5.1

8/14/2020, 1:03 PM, E:\Lexan\Projects\Wendys\ELECTRICAL\SMART 55 SQUARE (1.0) - MEP - DWG - JAN 2020\90_SMART-1.0-55-SQUARE_E5_1_Electrical Elevations.dwg, Owner

ELECTRICAL SPECIFICATIONS

260500 - COMMON WORK RESULTS FOR ELECTRICAL

A. PROVIDE ALL MATERIALS AND EQUIPMENT AND PERFORM ALL LABOR REQUIRED TO INSTALL NEW COMPLETE ELECTRICAL SYSTEM AS INDICATED ON DRAWINGS, AS REQUIRED BY CODE AND AS SPECIFIED HEREIN, IN SECTIONS 260500 THROUGH 270511.
1. TEMPORARY SERVICE AS REQUIRED.
2. PRIMARY DISTRIBUTION BY ELECTRIC COMPANY.
3. SECONDARY SERVICE AND METERING INSTALLATION BY CONTRACTOR.
4. EMERGENCY AND EXIT LIGHTING SYSTEMS.
5. TELEPHONE SYSTEM CONDUIT AND CABLES AS SHOWN ON THE DRAWINGS.
6. LIGHTING, HEATING AND POWER PANELS AND BRANCH CIRCUIT WIRING.
7. WIRING DEVICES AND PLATES.
8. INTERIOR AND EXTERIOR LIGHTING FIXTURES AND LAMPS, INSTALLATION AND WIRING.
9. LIGHTING CONTROLS.
10. CONNECTIONS TO EQUIPMENT FURNISHED BY OTHERS.

B. WORK WHICH SHALL BE PERFORMED BY OTHERS INCLUDES THE FOLLOWING:
1. FINAL CONNECTIONS OF MISCELLANEOUS EQUIPMENT BY ELECTRICAL CONTRACTOR.
2. CONTROL WIRING THAT IS FURNISHED BY OTHERS PRE-WIRED IN UNITS.
3. TELEPHONES AND FINAL CONNECTION OF WIRING THERETO.
4. INTERNAL WIRING OF EQUIPMENT FURNISHED AND PRE-WIRED BY OTHERS.
5. SECURITY SYSTEM FURNISHED AND INSTALLED BY SECURITY CONTRACTOR.

C. THIS CONTRACTOR SHALL FURNISH ALL LABOR, MATERIALS AND EQUIPMENT NECESSARY TO INSTALL ALL OF THE 208/120 VOLT ELECTRICAL SERVICE FROM THE UTILITY COMPANY TRANSFORMER TO THE SERVICE ENTRANCE EQUIPMENT, INCLUDING CABLES, CONDUIT, PULL WIRE, AND GROUND ROD AND SLEEVE. CONTRACTOR SHALL COORDINATE INSTALLATION OF THE MAIN ELECTRICAL DISCONNECT WITH THIS WORK.

D. ELECTRICAL EQUIPMENT FURNISHED BY OTHER TRADES OR BY THIS CONTRACTOR AND SPECIFIED IN OR SHOWN ON CONTRACT DOCUMENTS SHALL BE INSTALLED AND CONNECTED BY THIS CONTRACTOR, EXCEPT AS OTHERWISE NOTED. PROVIDE BRANCH CIRCUIT CONNECTIONS TO ELECTRICALLY OPERATED EQUIPMENT FURNISHED BY OTHERS AS SPECIFIED IN OR SHOWN ON THE CONTRACT DOCUMENTS. TEMPORARY WIRING FOR OTHER CONTRACTORS SHALL BE FURNISHED AND INSTALLED BY THIS CONTRACTOR WHO SHALL BE ENTIRELY RESPONSIBLE FOR THE SAFE AND SATISFACTORY OPERATION OF SAID TEMPORARY WIRING. COMPLY WITH LATEST REQUIREMENTS OF OCCUPATIONAL SAFETY AND HEALTH ACT (OSHA). PROVIDE PERSONNEL GROUND FAULT PROTECTION ON ALL TEMPORARY POWER AND LIGHTING CIRCUITS 30 AMPERES OR LESS. GROUND FAULT CIRCUIT INTERRUPTERS ON CONSTRUCTION CIRCUITS ARE NOT REQUIRED WHERE CIRCUIT IS A PERMANENT CIRCUIT TO BE A PART OF THE COMPLETED BUILDING. HOWEVER, CONTRACTOR SHALL PROVIDE APPROVED CORD SETS INCORPORATING GFCI PROTECTION FOR PERSONNEL. REFER TO THE NEC.

E. ALL FINISH PAINTING IS TO BE PERFORMED BY GENERAL CONTRACTOR EXCEPT THAT THIS CONTRACTOR SHALL RESTORE TO ORIGINAL CONDITION ANY PAINTING DEFACED BY THIS CONTRACTOR AFTER ORIGINAL PAINTING.

F. ALL WORK SHALL BE DONE IN ACCORDANCE WITH:
1. NATIONAL ELECTRICAL CODE.
2. CODES: STATE, CITY AND COUNTY BUILDING CODES AND ORDINANCES.
3. NATIONAL BOARD OF FIRE UNDERWRITERS.
4. CERTAIN CODES AND STANDARDS AS SET UP BY VARIOUS TECHNICAL SOCIETIES SUCH AS UL, NEMA, NECA, IEEE, ASTM, IES, IPCEA, AND ANSI.
5. THIS WORK SHALL BE GOVERNED ALSO BY LOCAL INSPECTOR'S REQUIREMENTS.
6. FEDERAL OCCUPATIONAL SAFETY AND HEALTH ACT STANDARDS.
7. AMERICANS WITH DISABILITIES ACT.

G. ALL PERMITS REQUIRED BY LAWS, ORDINANCES AND BUILDING CODES HAVING JURISDICTION SHALL BE OBTAINED AT PROPER TIME BY AND AT THE EXPENSE OF THIS CONTRACTOR.

H. ALL ELECTRICAL WORK SHALL BE INSPECTED BY THE GOVERNMENTAL AGENCY HAVING JURISDICTION, INCLUDING LOCAL INSPECTION AUTHORITIES.

I. UPON COMPLETION OF THE WORK, THIS CONTRACTOR SHALL FURNISH TO THE ARCHITECT A CERTIFICATE OF INSPECTION AND APPROVAL FROM THE ABOVE DEPARTMENT BEFORE FINAL PAYMENT ON CONTRACT WILL BE ALLOWED.

J. TEST ALL WIRING AND CONNECTIONS FOR CONTINUITY AND GROUNDING BEFORE ANY EQUIPMENT IS CONNECTED. WHEN DIRECTED BY ARCHITECT, DEMONSTRATE BY PROPER VOLTAGE MEGGER TEST OF INSULATION RESISTANCE OF ANY CONDUCTORS AND REPLACE ALL CONDUCTORS WHICH FAIL SAID TESTS UNTIL ALL CONDUCTORS ARE FREE FROM INSULATION FAULTS.

K. ELECTRICAL LAYOUTS ARE SCHEMATIC. EXACT LOCATIONS ARE DETERMINED BY EXACT LOCATION OF EQUIPMENT, ETC., AND MAY BE REVISED TO SUIT THE CONSTRUCTION CONDITIONS AND AID IN COORDINATION WITH WORK OF OTHER CONTRACTORS.

L. ELECTRICAL DRAWINGS ARE INTENDED TO INDICATE APPROXIMATE LOCATIONS OF SWITCHES, RECEPTACLES, LIGHTING FIXTURES AND OTHER ITEMS OF VARIOUS ELECTRICAL SYSTEMS OF PROJECT. EXACT LOCATIONS AND ROUGH-IN DIMENSIONS FOR ALL WORK AND EQUIPMENT SHALL BE OBTAINED FROM ARCHITECT OR OWNER AS WORK PROGRESSES. SHOULD THE ELECTRICAL CONTRACTOR FAIL TO PROPERLY OBTAIN SUCH LOCATIONS OR DIMENSIONS, THE CONTRACTOR SHALL REVISED THE LOCATIONS AT THE CONTRACTOR'S EXPENSE WHEN REQUESTED BY ARCHITECT OR OWNER. ARCHITECT AND OWNER RESERVE THE RIGHT TO MAKE MINOR CHANGES IN LOCATION OF ELECTRICAL WORK OR EQUIPMENT PRIOR TO ROUGHING IN WITH NO ADDITIONAL COST.

M. OWNER RESERVES THE RIGHT TO DIRECT REMOVAL AND REPLACEMENT OF ANY ITEM WHICH DO NOT PRESENT AN ORDERLY OR REASONABLY NEAT OR WORKMANLIKE APPEARANCE, PROVIDED THAT SUCH ITEM CAN BE PROPERLY INSTALLED IN SUCH ORDERLY WAY BY METHODS USUAL IN SUCH WORK. ADDITIONALLY, OWNER WILL DIRECT REMOVAL AND REPLACEMENT OF ANY ITEM WHICH DOES NOT COMPLY WITH CONTRACT DRAWINGS OR SPECIFICATIONS. SUCH REMOVALS OR REPLACEMENTS SHALL BE AT THE SOLE DISCRETION OF THE OWNER AND SHALL BE DONE BY CONTRACTOR, AT THE CONTRACTOR'S EXPENSE, WHEN SO DIRECTED IN WRITING BY THE OWNER.

N. THE MATERIALS AND EQUIPMENT INSTALLED IN THE WORK SHALL MEET THE REQUIREMENTS OF THE CONTRACT DOCUMENTS AND NO MATERIALS OR EQUIPMENT SHALL BE ORDERED UNTIL REVIEWED BY THE OWNER.

O. MANUFACTURER'S CATALOG CUTS MAY BE SUBMITTED FOR STANDARD CATALOG LIGHTING FIXTURES AND OTHER EQUIPMENT. CATALOG CUTS MAY BE MARKED UP TO MEET THE PROJECT SPECIFICATIONS. CUTS SHALL BE MARKED TO INDICATE MODEL NUMBER, SIZE, TYPE, COLOR, RATING, ETC., OF THE ITEM TO BE FURNISHED.

P. PROVIDE INSTRUCTION TO OWNER'S OPERATING PERSONNEL AS NECESSARY, SHOWING LOCATIONS AND PROPER OPERATION OF MAJOR ITEMS OF EQUIPMENT AND SYSTEM COMPONENTS AND REFERRING TO THE OPERATING INSTRUCTION MANUAL DESCRIBED BELOW AS A GUIDE.

Q. COMPILE TWO (2) WRITTEN MANUALS OF OPERATING INSTRUCTIONS INCLUDING COPIES OF SHOP DRAWINGS AND A LISTING OF EQUIPMENT SUPPLIERS. ASSEMBLE IN 8-1/2" X 11" HARD BACKED INDEXED BINDER. MATERIAL SHALL BE AS FOLLOWS:
1. TITLE PAGE: TITLE OF JOB, TENANT, ADDRESS, DATE OF SUBMISSION, CONTRACTOR, AND ENGINEER.
2. INDEX.
3. LIST OF MAJOR EQUIPMENT USED IN PROJECT ACCOMPANIED BY CONTRACTOR PURCHASE ORDER NUMBERS AND SUPPLIERS' NAMES AND ADDRESSES.
4. ONE COPY OF EACH SHOP DRAWING GROUPED BY TYPES OF EQUIPMENT, I.E., LIGHTING FIXTURES, PANELBOARDS, ETC.
5. SECTION FOR EACH SYSTEM, INCLUDING:
   a. BRIEF DESCRIPTION OF SYSTEM OPERATION WITH LOCATION OF MAJOR COMPONENTS.
   b. LIST OF ITEMS IN SYSTEM REQUIRING PERIODIC SERVICE. REQUIRES SEPARATE SECTION FOR EACH OF: ELECTRICAL DISTRIBUTION SYSTEM FROM THE SERVICE ENTRANCE TO EACH LIGHTING AND POWER PANEL AND OTHER SYSTEMS (I.E. CONTROL SYSTEMS AND ANY OTHER ELECTRICAL CONTRACTOR SYSTEM LISTED IN THESE SPECIFICATIONS.)

R. ELECTRICAL CONTRACTOR SHALL GUARANTEE HIS WORKMANSHIP AND MATERIAL FOR A PERIOD OF ONE YEAR FROM DATE OF SUBSTANTIAL COMPLETION AND LEAVE HIS WORK IN PERFECT ORDER AT COMPLETION.

S. SHOULD DEFECTS DEVELOP WITHIN GUARANTEE PERIOD, THIS CONTRACTOR SHALL, UPON NOTICE OF SAME, REMEDY DEFECTS AND HAVE DAMAGES TO OTHER WORK OR FURNISHINGS CAUSED BY DEFECTS OR WORK OR CORRECTING SAME REPAIRED AND/OR REPLACED AT HIS EXPENSE TO CONDITION BEFORE SUCH DAMAGE.

T. WITHIN 90 DAYS AFTER THE DATE OF SYSTEM ACCEPTANCE, RECORD DRAWINGS OF THE ACTUAL INSTALLATION SHALL BE PROVIDED TO THE BUILDING OWNER. RECORD DRAWINGS SHALL INCLUDE AS A MINIMUM THE LOCATION AND RATING OF EACH PIECE OF EQUIPMENT, GENERAL CONFIGURATION OF WIRE AND CONDUITS INCLUDING SIZES AND ROUTING, ETC.

260519 - LOW-VOLTAGE ELECTRICAL POWER CONDUCTORS AND CABLES

A. CONDUCTORS SHALL BE COPPER. UNLESS NOTED OTHERWISE ON THE DRAWINGS, THE MINIMUM COPPER WIRE SIZES FOR WET AND DRY AREAS AS DEFINED BY THE NEC SHALL BE AS FOLLOWS:

20 AMP CKT BKR OR FUSE = #12 AWG, THHN/THWN
30 AMP CKT BKR OR FUSE = #10 AWG, THHN/THWN
40 AMP CKT BKR OR FUSE = #8 AWG, THHN/THWN
50 AMP CKT BKR OR FUSE = #8 AWG, THHN/THWN
100 AMP CKT BKR OR FUSE = #3 AWG, THHN/THWN
125 AMP CKT BKR OR FUSE = #1 AWG, THHN/THWN
200 AMP CKT BKR OR FUSE = #3/0 AWG, THHN/THWN

B. CONDUCTORS USED FOR EMERGENCY LIGHTING CIRCUITS SHALL BE #10 AWG, MINIMUM, AND SHALL BE RUN IN SEPARATE CONDUIT USED FOR NO OTHER PURPOSE.

C. CIRCUIT BREAKER/FUSE AND WIRE SIZE COMBINATIONS NOT SHOWN ABOVE SHALL BE APPROVED BY THE ENGINEER PRIOR TO INSTALLATION.

D. THE FOLLOWING COLOR CODE SHALL BE USED:

	208/120 VOLT
PHASE A	BLACK
PHASE B	RED
PHASE C	BLUE
NEUTRAL	WHITE
GROUND	GREEN
ISOLATED GROUND	GREEN/YELLOW TRACER

260526 - GROUNDING AND BONDING

A. FURNISH AND INSTALL A COMPLETE GROUNDING SYSTEM IN COMPLIANCE WITH ALL REQUIREMENTS OF THE NATIONAL ELECTRICAL CODE.

B. BOND ALL STRUCTURAL STEEL TO EARTH, GROUND RODS OR PLATES, OR WATER SYSTEM AND ISOLATED GROUND FOR IT.

C. BOND ALL ROOF MOUNTED EQUIPMENT TO NEC ACCEPTABLE GROUNDS ONLY.

D. A SEPARATE EQUIPMENT GROUNDING CONDUCTOR, MINIMUM SIZE PER NEC TABLE 250.122, SHALL BE INSTALLED IN ALL FEEDERS, BRANCH CIRCUITS AND CONTROL CIRCUITS. CONDUCTOR INSULATION SHALL BE GREEN.

E. CONDUIT SYSTEM SHALL BE ELECTRICALLY CONTINUOUS. ALL ENCLOSURES AND NON-CURRENT CARRYING METALS TO BE GROUNDED. ALL LOCK NUTS MUST CUT THROUGH ENAMELED OR PAINTED SURFACES ON ENCLOSURES. WHERE ENCLOSURES AND NON-CURRENT CARRYING METALS ARE ISOLATED FROM THE CONDUIT SYSTEM, USE BONDING JUMPERS WITH APPROVED CLAMPS.

F. ALL RECEPTACLES SHALL BE BONDED TO A GROUND CONDUCTOR USING A #12 AWG MINIMUM BONDING JUMPER BETWEEN RECEPTACLE TERMINAL AND GROUND CONDUCTOR. METAL-TO-METAL CONTACT BETWEEN THE DEVICE YOKE AND THE OUTLET BOX IS NOT ACCEPTABLE FOR EITHER SURFACE MOUNTED BOXES OR FLUSH TYPE BOXES.

G. LIGHTING FIXTURES SHALL BE GROUNDED BY THE USE OF A PIGTAIL FASTENED ON BARE METAL THAT IS FREE OF PAINT.

260533 - RACEWAY AND BOXES

A. ELECTRICAL CONDUCTORS SHALL BE ENCLOSED IN CONTINUOUS GROUNDED EMT CONDUIT RACEWAY SYSTEM EXCEPT AS OTHERWISE NOTED.

B. RACEWAY AND ENCLOSURE SIZES SHALL BE AS SHOWN ON DRAWINGS OR, IF NOT SHOWN, SHALL BE SIZED TO COMPLY WITH NEC FILL REQUIREMENTS FOR CONDUCTORS ENCLOSED.

C. PULL OR JUNCTION BOXES SHALL BE PROVIDED IN ALL RACEWAY SYSTEMS AT MAXIMUM OF 100 FOOT INTERVALS AND WHERE REQUIRED TO AVOID EXCESSIVE NUMBER OF BENDS, TO FACILITATE WIRE PULLING OR TO PROVIDE ACCESS TO RACEWAY SYSTEM.

D. RACEWAYS AND ENCLOSURES SHALL BE ADEQUATELY SUPPORTED FROM BUILDING STRUCTURE WITH APPROVED SUPPORT RODS AND/OR CLAMPS.

E. ALL CONDUIT SHALL BE RIGID HEAVYWALL GALVANIZED STEEL OR THIN WALL EMT WHERE PERMITTED BY CODE OR AS HEREINAFTER SPECIFIED. PVC SCHEDULE 80 CONDUIT WITH RIGID GALVANIZED STEEL ELBOWS MAY BE USED UNDER FLOOR SLAB. MINIMUM CONDUIT SIZE SHALL BE 3/4".

F. ALL CONDUIT FITTINGS SHALL BE GALVANIZED MALLEABLE IRON OR STEEL. CONNECTORS AND COUPLINGS SHALL BE THREADED OR CUPPED SET SCREW TYPE, CONCRETE TIGHT. CONDUIT BODIES SHALL BE MALLEABLE IRON, THREADED FOR HEAVYWALL CONDUIT AND CUPPED SET SCREW TYPE FOR EMT, WITH CADMIUM FINISH AND CADMIUM PLATED SHEET STEEL COVERS. SYNTHETIC RUBBER GASKETS SHALL BE USED UNDER BODY COVERS EXPOSED TO WEATHER. EMT CONNECTORS SHALL BE INSULATED THROAT TYPE.

G. EMT THIN WALL CONDUIT MAY BE USED INSIDE HOLLOW PARTITIONS, AND ABOVE SUSPENDED CEILINGS AND EXPOSED ABOVE 8'-0" ABOVE FINISHED FLOOR OR ABOVE PANELBOARDS. EMT CONDUIT MAY NOT BE USED BURIED IN EARTH OR FILL, IN OR UNDER CONCRETE FLOOR OR IN POURED CONCRETE CONSTRUCTION. PVC CONDUIT USED UNDER FLOOR SLABS SHALL HAVE RIGID GALVANIZED STEEL ELLS AND METALLIC CONDUIT ABOVE FLOOR SLAB.

H. CONDUIT SHALL GENERALLY BE CONCEALED WHERE POSSIBLE. NO CONDUIT SHALL BE RUN IN SLAB, EXCEPT AS REQUIRED FOR FLOOR-MOUNTED DEVICES.

I. EXPOSED CONDUIT WILL BE PERMITTED IN ELECTRIC ROOMS, AND SIMILAR UNFINISHED SPACES, OVERHEAD IN AREAS WITHOUT CEILINGS AND ELSEWHERE AT THE DISCRETION OF THE OWNER.

J. DURING ROUGHING-IN, CAP ALL CONDUITS WHICH MAY BECOME FOULED WITH FOREIGN MATERIAL.
1. FLEXIBLE CONDUIT SHALL BE USED FOR "MAKEUP" CONNECTIONS TO VIBRATING EQUIPMENT, MOTORS, AND AS OTHERWISE NECESSARY OR PERMITTED BY CODE. LIGHTING FIXTURES MAY BE SUPPLIED WITH SHORT LENGTHS (MAX. 6'-0") OF FLEXIBLE CONDUIT. GROUNDING SHALL BE GREEN GROUNDING CONDUCTOR AS SPECIFIED IN "GROUNDING".
2. FLEXIBLE CONDUIT SHALL BE UL APPROVED 1/2" MINIMUM TRADE SIZE.
3. LIQUID-TIGHT FLEXIBLE CONDUIT AND LIQUID-TIGHT FITTINGS SHALL BE USED IN AREAS EXPOSED TO THE WEATHER OR EXCESSIVE MOISTURE.

K. NO MORE THAN FOUR (4) 90-DEGREE BENDS WILL BE ALLOWED IN ANY ONE CONDUIT RUN. WHERE MORE BENDS ARE NECESSARY IN ANY SINGLE RUN, A PULL BOX SHALL BE INSTALLED. PULL BOXES SHALL ALSO BE INSTALLED IN LONG RUNS AT A MAXIMUM SEPARATION OF 100'-0". ALL CONDUIT EXCEPT IN CONCRETE SLAB OR EARTH SHALL BE ROUTED PARALLEL OR PERPENDICULAR TO THE LINES OF THE BUILDING, AND NO OUT-OF-PLUMB OR DIAGONAL LINES WILL BE ACCEPTED.

L. OUTLETS SHALL BE PROVIDED FOR DEVICES, LIGHTING FIXTURES, MOTORS AND EQUIPMENT CONNECTIONS, SYSTEMS EQUIPMENT CONNECTIONS, SPECIAL OUTLETS, AND AS OTHERWISE REQUIRED.

260553 - IDENTIFICATION

A. PROVIDE NAMEPLATES ON THE FOLLOWING EQUIPMENT:

B. NAMEPLATES SHALL INDICATE FUNCTION OF EACH DEVICE. NAMEPLATES SHALL BE LAMINATED PHENOLIC WITH A WHITE SURFACE AND BLACK CORE. USE 1/16" THICK MATERIAL FOR PLATES UP TO 2" X 4". FOR LARGER SIZES, USE 1/8" THICK MATERIAL.

C. LETTERING SHALL BE CONDENSED GOTHIC. THE SPACE BETWEEN LINES SHALL BE EQUAL TO THE WIDTH OF THE LETTERS. USE 1/4" MINIMUM HEIGHT LETTERS WHICH OCCUPY FOUR TO THE INCH. INCREASE LETTER SIZE TO 3/4" ON LARGER PLATES.

D. FASTEN NAMEPLATES TO EQUIPMENT USING ADHESIVE MATERIAL THAT IS INTENDED FOR USE ON ENAMELED SURFACES. ADHESIVE SHALL BE NON_AGING FOR AN APPLICATION AND USAGE TEMPERATURE RANGE OF 0 TO 50 DEGREES CELSIUS.

262416 - PANELBOARDS

A. INSTALL MODULAR SWITCHGEAR WHICH INCLUDES PANELBOARDS WITH ALL CIRCUIT BREAKERS, PLUS CONTROL SYSTEMS FOR HOODS, HVAC AND LIGHTING AS SHOWN ON THE DRAWINGS. SUBSTITUTIONS OF LOOSE PANELS INSTEAD OF MODULAR SWITCHGEAR IS NOT ALLOWED. MODULAR SWITCHGEAR SHALL BE LISTED/LABLED BY A RECOGNIZED TESTING LABORATORY.

B. MODULAR SWITCHGEAR SHALL BE PURCHASED FROM ONE OF THE 'SUPPLIER LIST' COMPANIES (REFER TO ARCHITECTURAL DRAWINGS). NO SUBSTITUTIONS ARE ALLOWED. THIS CONTRACTOR MUST VERIFY ALL REQUIREMENTS OF MODULAR SWITCHGEAR WITH SUPPLIER PRIOR TO ORDERING. AT MINIMUM, THIS CONTRACTOR SHALL VERIFY THE FOLLOWING:
1. ANY BREAKER MODIFICATIONS (AMPACITY, NUMBER OF POLES, CONTROL, RATINGS, GFCI, HACR, SWITCHING DUTY, SHUNT TRIP, ETC.).
2. RELOCATION OF ANY CIRCUITS.
3. AIC RATING REQUIRED, AFTER COORDINATING THIS WITH THE LOCAL UTILITY COMPANY.
4. HVAC (RTU AND HOOD FANS) CONTROL PACKAGE INCLUDED.
5. ANY OTHER SITE SPECIFIC MODIFICATIONS.

C. CIRCUIT BREAKERS SHALL BE QUICK MAKE, QUICK BREAK, BOLT ON, THERMAL MAGNETIC TRIP (ENCLOSURE COMPENSATED), MOLDED CASE TYPE, UL LISTED. 15 AND 20 AMP SINGLE POLE BREAKERS SHALL CARRY THE UL "SWD" MARKING.

D. REFER TO PANEL SCHEDULES ON PLANS FOR ADDITIONAL INFORMATION.

E. THIS CONTRACTOR SHALL PROVIDE A TYPED CIRCUIT DIRECTORY CARD MOUNTED IN A FRAME WITH A CLEAR PLASTIC PROTECTIVE COVER ON INSIDE OF PANEL DOORS.

262713 - ELECTRICAL SERVICE AND METERING

A. METERING EQUIPMENT SHALL BE FURNISHED BY ELECTRICAL UTILITY COMPANY, AND INSTALLED BY THIS CONTRACTOR. COORDINATE WITH ELECTRIC COMPANY. EQUIPMENT SHALL BE INSTALLED AS INDICATED IN ONE-LINE DIAGRAM ON THE DRAWINGS.

262726 - WIRING DEVICES

A. FURNISH AND INSTALL WIRING DEVICES, INCLUDING SWITCHES, RECEPTACLES AND POWER RECEPTACLES, TELEPHONE OUTLET BOXES, COVERPLATES AND BLANK OUTLET PLATES AS SHOWN OR DESCRIBED ON DRAWINGS. WIRING DEVICES SHALL BE HUBBELL OR EQUIVALENT PREMIUM SPECIFICATION GRADE AS MANUFACTURED BY BRYANT, EAGLE, SLATER, PASS & SEYMOUR, OR LEVITON. COLOR SHALL BE AS DIRECTED BY ARCHITECT OR OWNER.

B. RECESSED OUTLET BOXES SHALL BE STAMPED STEEL SUITABLE FOR THE DEVICE INSTALLED.

C. SURFACE MOUNTED OUTLET BOXES SHALL BE CAST IRON SUITABLE FOR THE DEVICE INSTALLED.

D. DUPLEX RECEPTACLES SHALL BE A MINIMUM OF 20 AMPERE RATING.

E. COVERPLATES SHALL BE PLASTIC UNLESS OTHERWISE NOTED. COLOR SHALL BE AS DIRECTED BY ARCHITECT OR OWNER.

F. COVERPLATES FOR SURFACE MOUNTED BOXES SHALL BE STAMPED STEEL SUITABLE FOR THE PARTICULAR BOX AND DEVICE CONFIGURATION.

G. WIRING DEVICES UNLESS OTHERWISE PROPERLY AUTHORIZED, SHALL BE SAME MANUFACTURERS ONLY; NO ADDITIONAL MANUFACTURERS SHALL BE PERMITTED UNLESS SPECIFICALLY AUTHORIZED BY THE OWNER.

H. LOW VOLTAGE CONTROL DEVICES SHALL BE AS NOTED ON DRAWINGS OR AS REQUIRED.

I. THIS CONTRACTOR SHALL FURNISH AND INSTALL ALL MOTOR CONTROLS, INCLUDING STARTERS, SAFETY DEVICES AND REMOTE CONTROL STATIONS, UNLESS FURNISHED BY EQUIPMENT MANUFACTURER IN PRE-WIRED ASSEMBLIES.

J. FURNISH AND INSTALL CONTACTORS, CONTROL RELAYS, PUSHBUTTON STATIONS, SELECTOR SWITCHES, PILOT LIGHTS, FUSES AND SIMILAR CONTROL AUXILIARIES AS SHOWN ON DRAWINGS AND/OR REQUIRED TO PROVIDE PROPER CONTROL AND ISOLATION BETWEEN VARIOUS AUTOMATIC CONTROLLERS AND EQUIPMENT SHOWN ON THE DRAWINGS.

K. ALL CIRCUIT BREAKERS FEEDING MOTOR LOADS SHALL BE HACR TYPE.

L. EQUIPMENT SHALL BE SAME MAKE AS MOTOR STARTERS. PUSHBUTTON STATIONS, SELECTOR SWITCHES, PILOT LIGHTS: HEAVY DUTY, OIL TIGHT, STANDARD SIZE, WITH TRANSFORMER TYPE PILOT LIGHTS, FLUSH MOUNTED WHERE PRACTICAL.

M. ANY ACCESS PANELS REQUIRED BUT NOT SPECIFIED OR SHOWN ON DRAWINGS SHALL BE FURNISHED BY THIS CONTRACTOR WITH DESIGN TO BE APPROVED BY ARCHITECT BEFORE INSTALLATION.

262813 - FUSES

A. ALL FUSES SHALL BE BUSSMANN, SIZES AS NOTED ON DRAWINGS.

B. ALL FUSES SHALL BE UL LISTED, CURRENT-LIMITING TYPE, MINIMUM 200,000 AMPS INTERRUPTING CAPACITY.

C. FUSES 1 AMP AND ABOVE SHALL BE BUSSMANN "LOW PEAK" RK-1. 250 VOLT FUSES SHALL BE USED ON 208/120 VOLT SYSTEMS.

D. CONTROL FUSES FOR MOTOR STARTERS, CONTACTORS, AND CONTROL PANEL TRANSFORMERS SHALL BE BUSSMANN FNQ-R SIZED AT 500% RATED CURRENT.

E. FURNISH SPARE FUSES TO THE OWNER IN THE FOLLOWING QUANTITIES: 10% OF TOTAL PROJECT QUANTITY (BUT NOT LESS THAN THREE (3) FOR EACH TYPE AND RATING OF FUSES).

F. TYPED LIST OF ALL SPARES SHALL ALSO BE INCLUDED.

262816 - ENCLOSED SWITCHES AND CIRCUIT BREAKERS

A. DISCONNECT SWITCHES SHALL BE HEAVY-DUTY TYPE, UL LISTED.

B. ALL SWITCHES SHALL HAVE SWITCH BLADES WHICH ARE FULLY VISIBLE IN THE "OFF" POSITION WHEN THE SWITCH DOOR IS OPEN. SWITCHES SHALL HAVE REMOVABLE ARC SUPPRESSORS WHERE NECESSARY TO PERMIT EASY ACCESS TO LINE SIDE LUGS. LUGS SHALL BE FRONT REMOVABLE AND UL LISTED FOR 75 DEGREES C., ALUMINUM OR COPPER WIRES.

C. SWITCHES SHALL BE QUICK-MAKE, QUICK-BREAK. THE OPERATING HANDLE SHALL BE AN INTEGRAL PART OF THE BOX, NOT THE COVER. PROVISIONS FOR PADLOCKING THE SWITCH IN THE "OFF" POSITION WITH AT LEAST THREE LOCKS SHALL BE PROVIDED. SWITCHES SHALL HAVE A DUAL COVER INTERLOCK TO PREVENT UNAUTHORIZED OPENING OF THE SWITCH DOOR WHEN THE HANDLE IS IN THE "ON" POSITION, AND TO PREVENT CLOSING OF THE SWITCH MECHANISM WITH THE DOOR OPEN. THE HANDLE POSITION SHALL INDICATE WHETHER THE SWITCH IS "ON" OR "OFF".

D. SWITCHES SHALL BE FURNISHED IN NEMA 1 GENERAL PURPOSE ENCLOSURE EXCEPT ALL SWITCHES LOCATED OUTDOORS SHALL BE NEMA 3R WEATHERPROOF (WP). NEMA 3R ENCLOSURE SHALL BE MANUFACTURED FROM GALVANIZED STEEL. ENCLOSURES SHALL HAVE A GRAY BAKED ENAMEL FINISH, ELECTRODEPOSITED, ON CLEANED, PHOSPHATIZED STEEL.

E. SWITCHES SHALL BE RATED FOR AC. FUSIBLE SWITCHES MUST ACCEPT CLASS R FUSES AND HAVE PROVISIONS TO REJECT ALL FUSES EXCEPT CLASS R. THE UL LISTED SHORT CIRCUIT RATING OF THE SWITCHES SHALL BE 200,000 RMS SYMMETRICAL AMPERES WHEN CLASS R FUSES ARE USED.

265100 - INTERIOR LIGHTING

A. INSTALL LIGHTING FIXTURES AS SHOWN ON THE DRAWINGS.

B. ALL FIXTURES SHALL BE LISTED AND LABELED BY UNDERWRITERS LABORATORIES AND ENERGY STAR AND/OR DLC LISTING.

C. FIXTURES ARE TO BE PROVIDED COMPLETE WITH END AND TRIM PLATES AND ALL MOUNTING ACCESSORIES REQUIRED FOR A COMPLETE FIXTURE INSTALLATION.

D. USE STEEL WIRE HANGERS FASTENED TO THE BUILDING STRUCTURE TO SUPPORT RECESSED FIXTURES AT EACH CORNER. (FOUR-CORNER SUSPENDED). FIXTURES TO FIT TIGHT AGAINST CONSTRUCTION TO ELIMINATE LIGHT LEAKS.

E. WALL-MOUNTED FIXTURES SHALL BE MOUNTED PLUMB WITH BUILDING LINES AND INSTALLED WITH LIGHTING CONTROL (IECC 2012) PROPER BOX AND COVER HARDWARE.

F. SURFACE-MOUNTED FIXTURES SHALL COVER MOUNTING HARDWARE. USE A CANOPY THAT IS NO LONGER THAN THE LENGTH AND WIDTH OF THE FIXTURE AND AT A HEIGHT THAT IS NO HIGHER THAN REQUIRED TO MOUNT FIXTURE ABSOLUTELY VERTICAL. CANOPY FINISH SHALL MATCH FIXTURE FINISH.

G. STEM-MOUNTED FIXTURES SHALL BE MOUNTED SO AS TO BE ABSOLUTELY VERTICAL AND HORIZONTAL. INSTALL AND SUPPORT AS SHOWN ON DRAWINGS.

270510 - TELEPHONE CONDUIT SYSTEM

A. CONDUIT FOR TELEPHONE WALL OUTLETS SHALL BE A MINIMUM OF 3/4" UNLESS NOTED OTHERWISE.

B. TELEPHONE OUTLET BOXES SHALL BE SINGLE GANG. PLATES SHALL BE FURNISHED AND INSTALLED BY THIS CONTRACTOR.

C. FURNISH AND INSTALL A 3/4" THICK TELEPHONE BACKBOARD AT LOCATION SHOWN ON THE DRAWINGS. THE PLYWOOD BACKBOARD SHALL BE SECURELY ATTACHED TO THE BUILDING WALLS TO SUPPORT RELAY PANELS, TERMINAL BLOCKS AND OTHER HARDWARE WEIGHING APPROXIMATELY 10 POUNDS PER SQUARE FOOT. PRIME AND PAINT THE BACKBOARD SIDES AND EDGES WITH TWO COATS OF GRAY FLAMEPROOF PAINT.

D. CONDUIT SYSTEM SHALL BE CONTINUOUS FROM OUTLETS TO TELEPHONE BACKBOARD. INSTALL PULL STRING IN EMPTY CONDUITS.

E. INSTALL #6 GROUND WIRE FROM TELEPHONE BACKBOARD TO SERVICE ENTRANCE GROUND PER TELEPHONE COMPANY'S REQUIREMENTS.

270511 - IT INSTALLATION

A. THE CONTRACTOR IS RESPONSIBLE FOR REVIEWING AND UNDERSTANDING WENDY'S REQUIREMENTS AND FORMS TO ENSURE A TIMELY INSTALLATION OF IT EQUIPMENT. THE CONTRACTOR SHALL COMPLETE, SIGN, AND RETURN THE IT READINESS FORM AS REQUIRED.

B. THE FOLLOWING ARE THE SITE READINESS MINIMUM REQUIREMENTS.
1. THE INSTALLATION OF ALL KITCHEN EQUIPMENT IS COMPLETE.
2. THE BUILDING HAS PERMANENT POWER.
3. ALL ISOLATED GROUND (IG RECEPTACLES) ARE INSTALLED AND ENERGIZED.
4. THE FRONT COUNTERS ARE COMPLETE AND ENERGIZED.
6. INTERIOR WALLS ARE COMPLETED FOR KIOSKS. ELECTRICAL EQUIP IS INSTALLED & OPERATIONAL.
7. ELECTRICAL IS INSTALLED AND ENERGIZED & WALLS ARE COMPLETED & READY FOR QUEUING BOARDS.
8. DRIVE THRU LOOPS ARE INSTALLED TO HME'S SPECIFICATIONS.
9. BUN WARMERS ARE INSTALLED.
10. MWS CART IS ONSITE.
11. HME LOOPS (DRIVE THRU LOOPS) ARE VISIBLE.

C. THE CONTRACTOR SHALL COORDINATE WITH WENDY'S CONSTRUCTION MANAGER, WENDY'S IT MANAGER, AND WENDY'S IT INSTALLATION CONTRACTOR TO SCHEDULE THE INSTALLATION IN A TIMELY MANNER.

SITE NUMBER:	00000
BASE MDL:	SMART 55 - SQUARE 2019
ASSET TYPE:	COMP./FRAN
CLASSIFICATION:	NEW
OWNER:	OWNER NAME
BASE VERSION:	2019
UPGRADE CLASSIFICATION:	NEW BUILD
PROJECT YEAR:	2019
FURNITURE PACKAGE:	2016 V3
DRAWING RELEASE	JANUARY 2020

WEILER ENGINEERING
P.O. BOX 832
VERADALE, WA 99037
PH. (509) 998-3068

PROJECT TYPE: NEW
SMART 55 - SQUARE

HIGHWAY 95
PONDERAY, ID 83852

REV.	DATE	DESCRIPTION
△	01-20-2020	JANUARY SPRINT 2020

ISSUE DATE: 08/14/2020
PROJECT NUMBER: --
DRAWN BY: dw
CHECKED BY: dw

SEAL

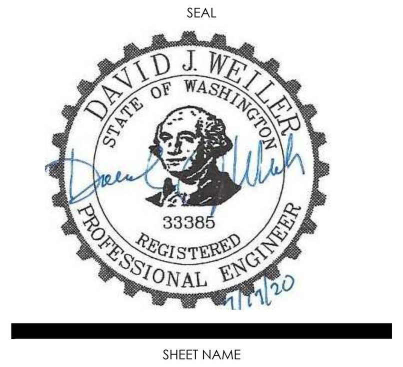

SHEET NAME
ELECTRICAL SPECIFICATIONS

SHEET NUMBER
E6.1

...\Lexar\Projects\Wendys\ELECTRICAL\SMART 55 SQUARE (1.0) - MEP - DWG - JAN 2020\90_SMART-1.0-55-SQUARE_E6_0_Electrical Specifications.dwg, Owner